THIS IS ISSUED IN STRICT CONFIDENCE THAT IT IS NOT USED AS A BASIS FOR MANUFACTURE OR SALE AND THAT IT IS NOT COPIED, REPRINTED OR DISCLOSED TO A THIRD PARTY EITHER WHOLLY OR IN PART WITHOUT THE PRIOR WRITTEN CONSENT OF CAL TEST ELECTRONICS, INC.

REVISIONS			
REV.	DESCRIPTION	DATE	APPROVED
A	CLASS A RELEASE	5/14/2019	
B	NOTE 2., VOLTAGE: UPDATED BASED ON LVD TESTING, WAS 600 V *NO RATED MEASUREMENT CATEGORY	7/30/2019	
C	UPDATED TO LATEST B SIZE DWG FORMAT; DWG WAS P423100 REV. B; ADDED 3 MODEL COLORS YELLOW, BLUE, & WHITE; MINOR TEXT CORRECTIONS.	8/30/2023	B. HANSEN

NOTE:

1. MATERIAL:
   - BODY, CAP & INNER INSULATOR: NYLON 6.6 (PA), UL94-1,COLORS: BODY & INNER INSULATOR, GREY: CAP, PER MODEL NUMBER.
   - CONTACT, PANEL NUT & ACCESSORIES: BRASS, C36000, NICKEL PLATED.
2. SPECIFICATIONS:
   - VOLTAGE: 100 V CAT II P2, PER IEC/EN 61010-1.
   - CURRENT: 36 A MAX.
   - OPERATING TEMPERATURE: 0 °C TO +60 °C.
3. CROSS-HOLE ALLIGNED ±3° PERPENDICULAR TO MOUNTING FLATS.
4. MAXIMUM PANEL THINKNESS: 9 mm.
5. MAXIMUM TIGHTENING TORQUE ON M12 PANEL NUT: 2.3 N.m. (1.70 FT-LBF).
6. RECOMMENDED ASSEMBLY TOOL: CT2246.
7. HARDWARE INCLUDED (1 EACH):
   1. PANEL NUT (CT2830)
   2. M4 FLAT WASHER
   3. M4 LOCK WASHER
   4. M4 HEX NUT
8. ROHS 2 COMPLIANT: EXEMPTION ANNEX III 6(C).
9. WEIGHT: 18.3 GRAMS.

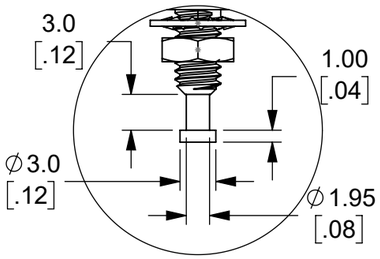

DETAIL B
SCALE 2 : 1
(SOLDER TURRET)

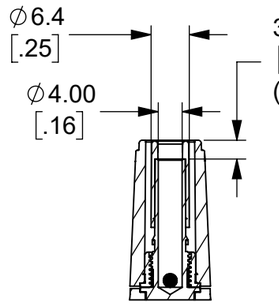

SECTION A-A

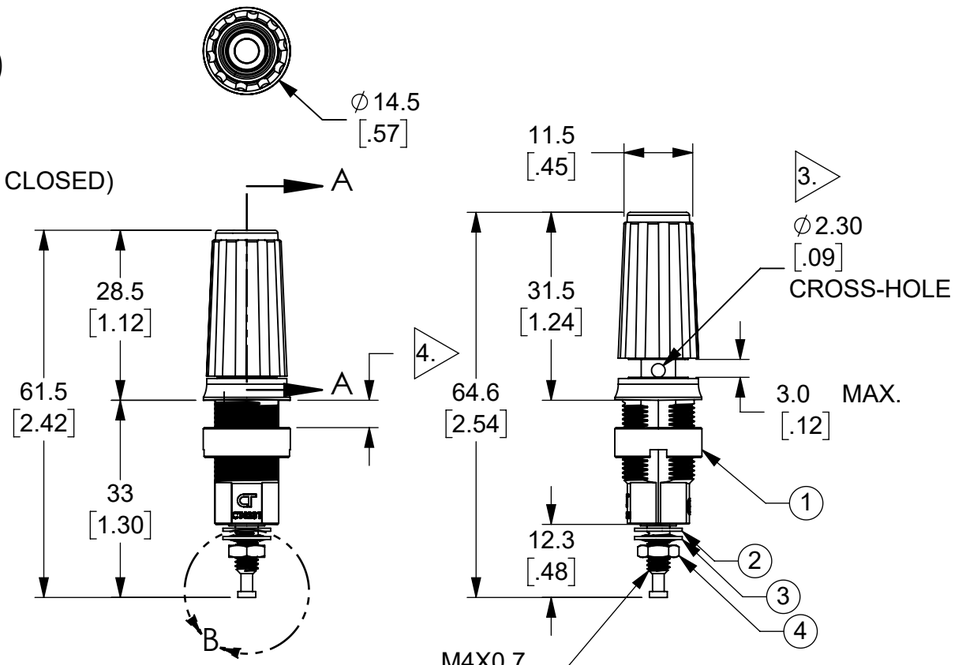

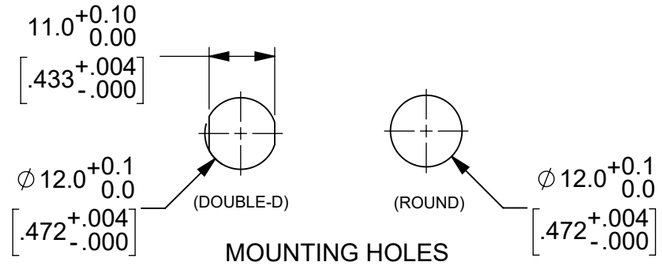

MOUNTING HOLES

CT4231-NI-9	NICKEL PLATED	WHITE
CT4231-NI-6	NICKEL PLATED	BLUE
CT4231-NI-5	NICKEL PLATED	GREEN
CT4231-NI-4	NICKEL PLATED	YELLOW
CT4231-NI-2	NICKEL PLATED	RED
CT4231-NI-0	NICKEL PLATED	BLACK
MODEL NUMBER	CONFIGURATION/PLATING	CAP COLOR

MODEL NUMBER TABLE



ISOMETRIC VIEW

THIRD ANGLE PROJECTION

REFERENCE

UNLESS OTHERWISE SPECIFIED DIMENSIONS ARE IN MILLIMETERS
TOLERANCES ARE:
X.X = ±0.5 X.X° = ±0.5°
X.XX = ±0.25
X.XXX = ±0.125
DO NOT SCALE DRAWING

MATERIAL: SEE NOTES

TREATMENT: NONE

FINISH: SEE NOTES

PROJECT NO. C368

APPROVALS	DATE
DRAWN WDH	5/1/2019
CHECKER G Gorgonio	8/30/2023
ENGR. B. Hansen	5/14/2019
DESIGN ACTIVITY	

METRIC

Cal Test ELECTRONICS
22820 Savi Ranch Prky.
Yorba Linda, CA 92887
USA

TITLE: 4mm SHEATHED BINDING POST, PANEL MOUNT

SIZE	CAGE CODE	DWG. NO.	REV.
B	43F45	CT4231	C

SCALE 1:1 SHEET 1 OF 1