Safety Modules
Safety Gate and Safety Magnetic Sensor
Types NSO02D, NSO13D


Screw, fixed


Screw, detachable

- **Safety Category 4, Performance Level e, according to EN 13849-1**
- **Safety Category 4 according to EN 954-1**
- **Category 0 Emergency Stop (EN 60204-1)**
- **Input type: 2 NO**
- **2 x 6 A NO safety outputs (NSO02D)**
- **3 x 6 A NO safety outputs and 1 x 6 A NC auxiliary output (NSO13D)**
- **Automatic / manual or monitored manual reset**
- **Single / double channel operations**
- **LED indication for outputs status and power supply ON**
- **Connection by fixed or detachable terminals**
- **For mounting on DIN-rail in accordance with DIN/EN 50 022**
- **22.5 mm Euronorm housing**

Product Description

Safety gate and safety magnetic sensor modules according to EN 60204-1, EN 292-1/-2, EN 418 and EN1088.
This family of safety module in Safety Category 4, Performance Level e, includes fixed screw and detachable screw as well as automatic/manual or monitored manual restart versions.

Ordering Key

N SO 0 2 D B24 S A

- **Housing**
- **Function**
- **Auxiliary outputs**
- **Safety outputs**
- **Safety category**
- **Power supply**
- **Terminals**
- **Start/Reset type**

Type Selection

Auxiliary outputs	Safety outputs	Terminals	Start/Reset type	Supply: 24 VAC/DC
	2 NO	Screw, fixed	Automatic / Manual	**N SO 0 2 D B24 S A**
	2 NO	Screw, fixed	Monitored manual	**N SO 0 2 D B24 S C**
	2 NO	Screw, detachable	Automatic / Manual	**N SO 0 2 D B24 D A**
	2 NO	Screw, detachable	Monitored manual	**N SO 0 2 D B24 D C**
1 NC	3 NO	Screw, fixed	Automatic / Manual	**N SO 1 3 D B24 S A**
1 NC	3 NO	Screw, fixed	Monitored manual	**N SO 1 3 D B24 S C**
1 NC	3 NO	Screw, detachable	Automatic / Manual	**N SO 1 3 D B24 D A**
1 NC	3 NO	Screw, detachable	Monitored manual	**N SO 1 3 D B24 D C**

Time Specification

Delay ON energisation	< 150 ms
Delay ON de-energisation	< 30 ms
Recovery time	≥ 30 ms
Channel simultaneity during outputs closing	Infinite
Input operating to START operating delay	
NSO...C	> 500 ms

Input Specifications

Function	2 NO, voltage free
Input current	
Terminals S11-S12	max 10 mA
Terminals S21-S22	max 10 mA
External contact resistance	
Terminals S11-S12	max. 60Ω
Terminals S21-S22	max. 60Ω

Output Specification

Safety outputs		Category 4, Performance Level e (EN 13849-1)
NSO02D		2 NO (13-14, 23-24)
NSO13D		3 NO (13-14, 23-24, 33-34)
Auxilary output		
NSO13D		1 NC (41-42)
Rated insulation voltage		250 VAC (rms)
Contact ratings ($AgSnO_2$)		2 µm Au
Safety outputs		
Resistive loads	AC1	6 A @ 230 VAC
	DC12	6 A @ 24 VDC
Small inductive loads	AC15	3 A @ 230 VAC
	DC13	2.5 A @ 24 VDC
Auxiliary output		6A, 24 VAC/DC
External contact fuse protection		5 A fast, 4 A slow
Mechanical life		> 10^7 operations
Electrical life		> 10^5 operations
Dielectric strength		
Dielectric voltage		4 kVAC (rms)

Specifications are subject to change without notice. Pictures are just an example. For special features and/or customization, please ask to our sales network. 27/09/12

CARLO GAVAZZI

Supply Specification

Power supply	Overvoltage cat III (IEC 60664)	
Rated operational volatge through terminal: A1, A2	24VAC - 15% / 10%, 50 to 60 Hz 24 VDC - 15% / +10%	
Short circuit protection	Internal PTC	
Dielectric voltage	**DC supply**	**AC supply**
Supply to input	none	none
Supply to output	4 kV	4kV
Input to output	4kV	4kV
Rated operational voltage	max 5 VA	

General Specifications

Indication for	
Power supply ON	LED, green
Output relays ON	LED, green (CH 1, CH2)
Environment	(EN 60529)
Degree of protection	IP 20
Pollution degree	2
Operating temperature	-25 to 65°C, R.H. < 95%
Storage temperature	-30 to 65°C, R.H. < 95%
Mimimum protection degree of the installation location	IP 54
Housing dimensions	22.5 x 99 x 114 mm
Weight	Approx. 200 g
Screw terminals	
Tightening torque	
Upper terminals	Max. 0.5 Nm
Lower terminals	Max 0.8 Nm
Approvals	cULus, TUV
CE Marking	Yes
EMC	Electromagnetic Compatibillity
Immunity	According to EN 61000-6-2
Emission	According to EN 61000-6-3

Mode of Operation

The safety modules NSO02D and NSO13D monitor both mechanical switches and safety magnetic sensors (2 NO contact outputs), according to 98/37/CE Machinery Directive.
If the unit is correctly supplied and the input terminals are closed (i.e. safety gate closed), the module is enabled to close the safety outputs and the external contactors can be energized.
When the input terminals are open (i.e. safety gate open) the module is not enabled to close the safety outputs and the external contactors can not be energized.

Automatic START
Provided that the terminals X1 and X2 (NSO02...A) or S33 and S34 (NSO13...A) are connected, the safety outputs close and the auxiliary output opens (NSO13...A) as soon as both S1 and S2 switches are closed.
The relevant CH1 and CH2 LED turn on.
Releasing even one input contact (S1 and/or S2) forces immediately the safety outputs to open and the auxiliary output (NSO13...A) to close.
A new operating cycle is possible only after releasing both input contacts and then operating them again.

Manual START
Provided that both S1 and S2 switches are closed, the safety outputs close and the auxiliary output opens (NSO13...A) as soon as the NO START pushbutton is pushed [connecting X1 and X2 (NSO02...A) or S33 and S34 (NSO13...A)]
A new operating cycle is possible only after releasing both input contacts, closing them again and pushing the START button.

Monitored manual START
The monitored manual START versions (NSO...C) work as described in the previous paragraph (Manual START) except for a minimum delay of 500 ms from the closed status of the input contacts to the pushing of the START button.
If the input terminals get closed with the START switch already closed, the safety outputs don't close and the auxiliary doesn't open (NSO13...C): it is necessary to release the START button and the input contacts before starting a new cycle, then operate the input contacts and finally, after at least 500 ms, operate the START button.
So if the NO START button gets welded, the outputs don't close anymore.

Operational Diagram

NSO02D...SA, NSO02D...DA
NSO13D...SA, NSO13D...DA

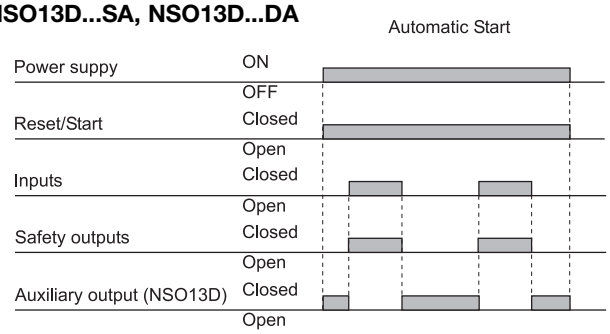

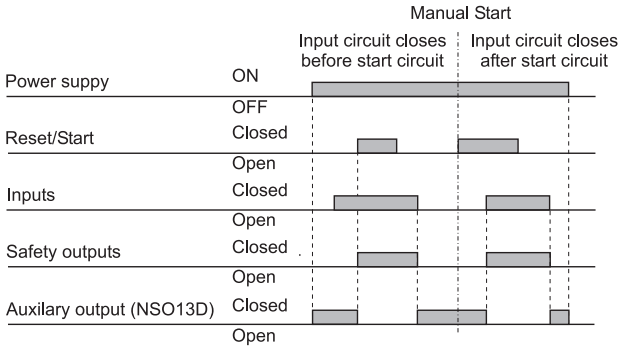

NSO02D...SC, NSO02D...DC
NSO13D...SC, NSO13D...DC

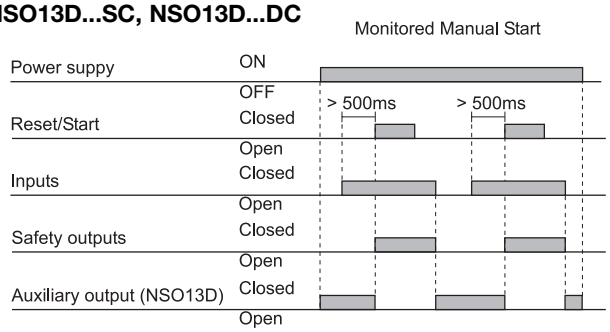

Wiring Diagrams

NSO02D - Magnetic sensor and one access monitoring (Double channel)

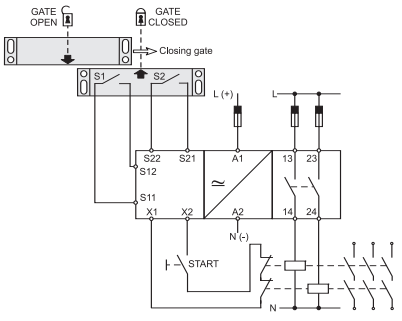

NSO13D - Magnetic sensor and one access monitoring (Double channel)

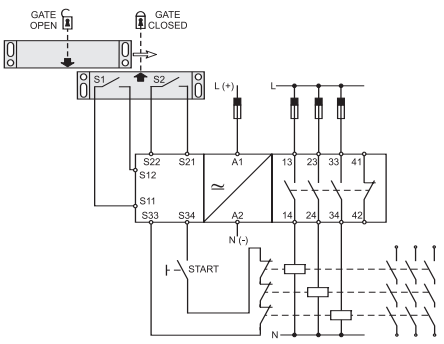

Specifications are subject to change without notice. Pictures are just an example. For special features and/or customization, please ask to our sales network. 27/09/12

Wiring Diagrams (cont.)

NSO02D - Magnetic sensors and two accesses monitoring Double channel)

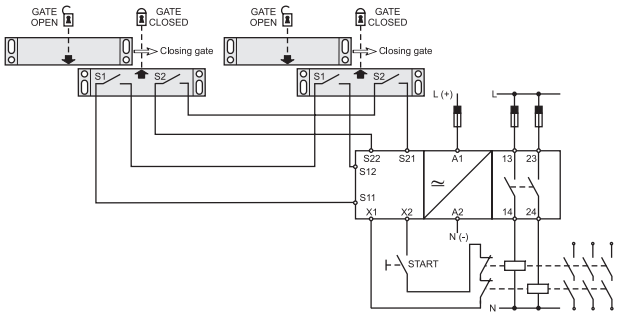

NSO13D - Magnetic sensors and two accesses monitoring (Double channel)

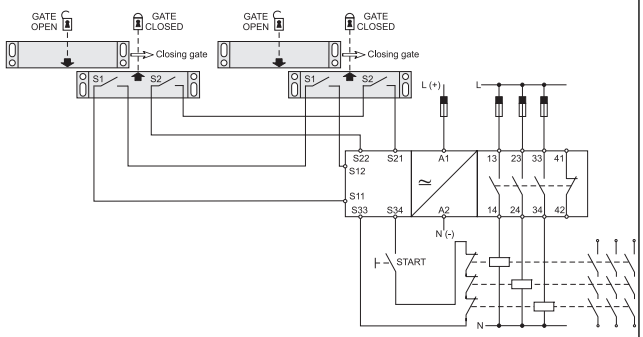

NSO02D - Mechanical switch and one access monitoring (Single channel)

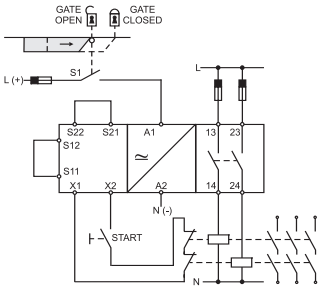

NSO13D - Mechanical switch and one access monitoring (Single channel)

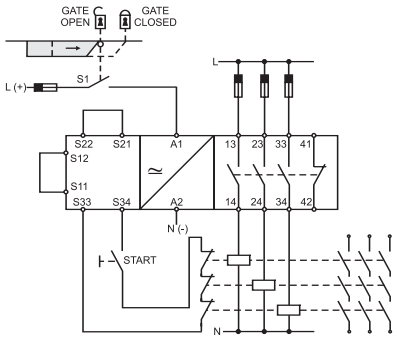

Dimensions

Versions with fixed terminals

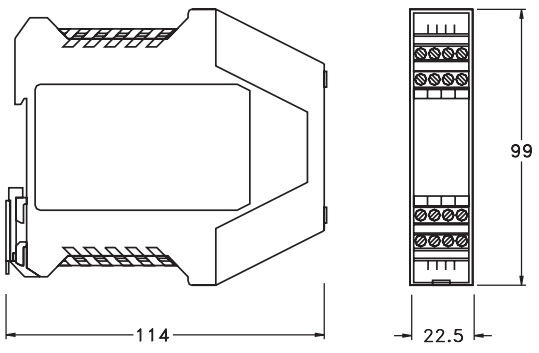

Versions with detachable terminals

