RSBD

Three-Phase Scroll Compressor Soft Starter



Description

RSBD is an easy to use soft starter for scroll compressors up to 95 Arms nominal current.
The units are equipped with a patented auto-adaptive algorithm that automatically adapts itself to the specific compressor it is controlling ensuring that an optimum inrush current reduction is achieved.
RSBD is a 2-phase controlled solution and is internally bypassed - resulting in less heat dissipation inside the panel.
Short Circuit and Overload protection are not provided with the controller and must be procured separately.

Benefits

- **Easy to use.** The RSBD is equipped with a self-learning algorithm that automatically adjusts the start parameters to reduce the compressor starting current.
- **Fast installation and set-up.** No settings are required.
- **Compact dimensions.** 12 - 45 Arms in 45 mm wide housing, 55 - 95 Arms in 75 mm wide housing.
- **Guided model selection.** Easy to use online selection tool to select the appropriate soft starter model depending on the compressor brand/model. Go to *http://gavazziautomation.com/nsc/HQ/EN/soft_starters.*
- **Tamper proof.** No user adjustments are available. RSBD automatically adjusts its internal parameters to ensure optimal starting at any condition.
- **Adjusts to load requirements.** The built-in HP function ensures that the compressor starts in < 1 second even under high pressure difference during start.

Applications

Scroll compressors, heat pumps, chiller, air-conditioning units

Main features

- Self-learning algorithm adjusts start parameters according to load
- No user adjustments required
- Limits starting current of 3 phase compressors

References

Order code

RSBD □□□ V 61HP

Enter the code entering the corresponding option instead of □

Code	Option	Description	Notes
R	-		
S	-	Soft starter	
B	-	Scroll compressor series	
D	-	2 phase	
□	40	220 – 400 VAC +10% -15% operational voltage (Ue)	
	60	220 – 600 VAC +10% -15% operational voltage (Ue)	RSBD60 models only
□	12	12 Arms	Rated operational current @ 40°C
	16	16 Arms	
	25	25 Arms	
	32	32 Arms	
	37	37 Arms	
	50	45 Arms	
	55	55 Arms	
	70	70 Arms	
	95	95 Arms	
□	E	110 - 400 VAC +10% -15% control voltage (Uc)	
	F	24 VAC/DC +10% -10% control voltage (Uc) Supply voltage: 24 VAC/DC	
	GG	100 - 240 VAC +10% -15% control/supply voltage	RSBD 60 models only
	FF	24 VAC/DC +10% -10% control/supply voltage: 24 VAC/DC	
V	-	Product versions	
61HP	-	Auxiliary relay outputs and HP algorithm	

Selection guide

		Operational voltage: 220 - 400VAC		Operational voltage: 220 - 600VAC	
Rated operational current (Ie)	**Housing**	**Control voltage 110 - 400 VAC**	**Control voltage 24 VAC/DC**	**Control/supply voltage 100 - 240 VAC**	**Control/supply voltage 24 VAC/DC**
12 Arms	45 mm	RSBD4012EV61HP	RSBD4012FV61HP	-	-
16 Arms		RSBD4016EV61HP	RSBD4016FV61HP	-	-
25 Arms		RSBD4025EV61HP	RSBD4025FV61HP	-	-
32 Arms		RSBD4032EV61HP	RSBD4032FV61HP	-	-
37 Arms		RSBD4037EV61HP	RSBD4037FV61HP	-	-
45 Arms		RSBD4050EV61HP	RSBD4050FV61HP	-	-
55 Arms	75 mm	RSBD4055EV61HP	RSBD4055FV61HP	RSBD6055GGV61HP	RSBD6055FFV61HP
70 Arms		RSBD4070EV61HP	RSBD4070FV61HP	RSBD6070GGV61HP	RSBD6070FFV61HP
95 Arms		RSBD4095EV61HP	RSBD4095FV61HP	RSBD6095GGV61HP	RSBD6090FFV61HP

Further reading

Information	Where to find it
RSBD 45mm instruction manual	http://www.productselection.net/MANUALS/UK/mc_rsbd_il.pdf
RSBD 75mm instruction manual	http://www.productselection.net/MANUALS/UK/mc_rsbd_il.pdf
CAD drawings (RSBD 45mm)	http://www.productselection.net/DXF/mc_rsbd_45mm.zip
CAD drawings (RSBD 75mm)	http://www.productselection.net/DXF/mc_rsbd_75mm.zip
Scroll compressor soft starter selector tool	http://gavazziautomation.com/nsc/HQ/EN/soft_starters

CARLO GAVAZZI compatible components

Purpose	Component name/code	Notes
Manual motor starters	GMS-32 □ - □ GMS-63 □ - □ GMS-100 □ - □	□: S: standard H: high breaking capacity
Finger guards	RFCG X6	6 pcs per box (RSBD 75mm models only)

Structure

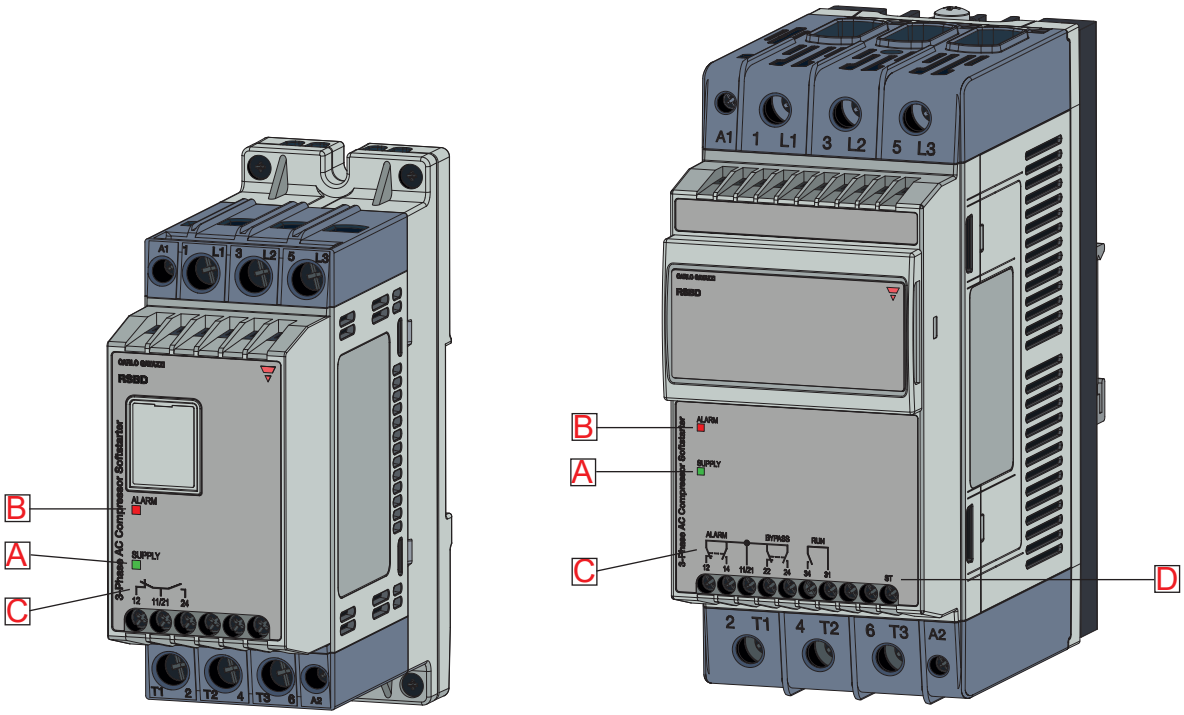

Element	Component	Function
A	LED indicators	Supply. Indicates that the RSBD supply is ON.
B	LED indicators	Alarm. Indicates that the RSBD is in alarm. The number of flashes indicates the alarm type.
C	Digital outputs	RSBD 45mm: 11, 12: NC relay ouput for alarm indication. 21, 24: NO relay ouput for top of ramp indication. RSBD 75mm: 11, 12, 14: Changeover relay (NO, NC) for alarm indication. 21, 22, 24: Changeover relay (NO, NC) for top of ramp indication. 31, 34: NO relay output for run indication.
D	Start signal	ST: Start signal (applicable to RSBD60 models only).

Mode of operation

Auto Adaptive Algorithm (Patented)

- RSBD series of soft starters includes an innovative auto-adaptive algorithm (Patented) that limits the compressor starting current and minimises current unbalance. Appropriate parameters are automatically set by RSBD in order to achieve an optimum inrush current reduction whilst maintaining a ramp-up time < 1 sec This feature is active at every compressor start to ensure that the RSBD adapts its parameters according to the load requirements at different operating conditions.

First start of RSBD

- At the very first start, the RSBD will start the compressor with the default current limit setting.

Note: The default current limit is equal to 3.5 x Ie (where Ie = soft starter rated current). Depending on the values of specific parameters, that are automatically measured by RSBD, it will adjust the current limit setting to a lower value. This new self-learned current limit setpoint will then be used by RSBD during the subsequent start.

High pressure (HP) function

- During the ramp-up sequence, the RSBD will check if the compressor is rotating. If the RSBD finds the compressor in locked rotor condition, it will trigger the HP function. During the HP sequence, the RSBD will gradually increase the current limit setpoint. The maximum value is ≤ 3.5 x Ie.

Note: Even during HP mode of operation the ramp-up time will be limited to a maximum of 1 sec. If the compressor does not reach full speed during a maximum of 1 sec, the RSBD will trigger the End of ramp alarm (5 flashes) and will go in alarm state.

Current balancing

- RSBD uses a two-phase control strategy with two anti-parallel thyristors across L1-T1 and L3-T3. Phase L2-T2 is the uncontrolled phase. During every start, RSBD measures a number of parameters and dynamically adjusts the starting parameters to minimise the current unbalance in the phase L2-T2 resulting in a smoother starting performance of the compressor.

Features

General

	RSBD 45mm	RSBD 75mm
Material	PA66	
Assembly	DIN or panel	
Protection grade	IP20 (EN/IEC 60529)	
Weight	430 g	2.2 kg
Overvoltage category	II	

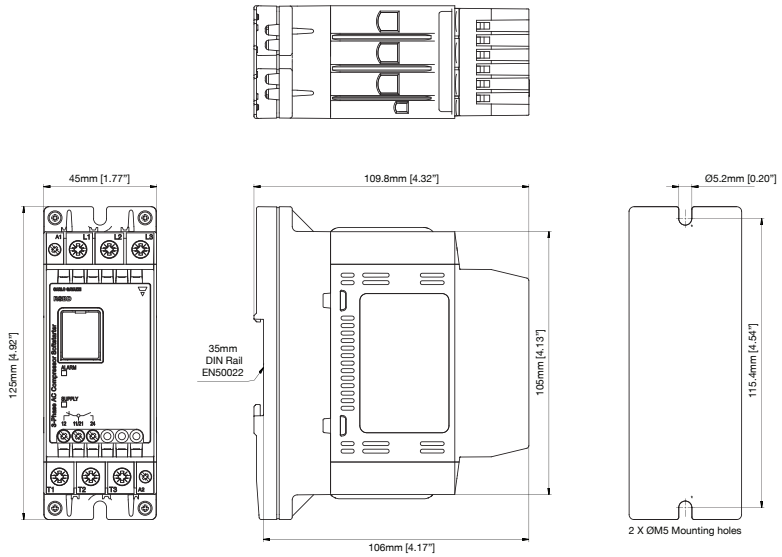

Fig. 1 *RSBD...12.. to RSBD...50..*

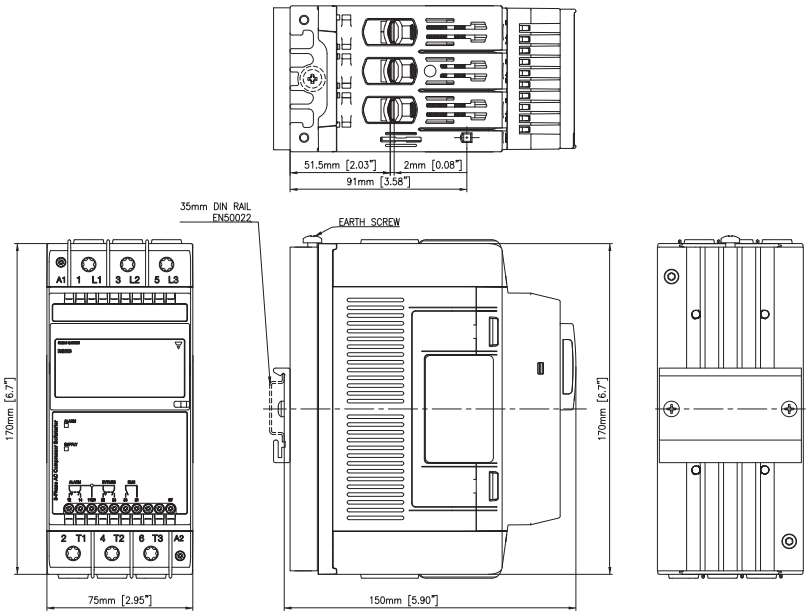

Fig. 2 *RSBD...55.. to RSBD...95..*

Settings

	RSBD 45mm	RSBD 75mm
Ramp-up time	Not required	
Ramp-down time	0 sec	
Initial torque	Automatically determined by RSBD	

Power Supply

	RSBD40..	RSBD60..
Operational voltage range	187 - 440 VACrms	187 - 660 VACrms
Supply current at idle	< 30 mAAC	
Blocking voltage	1200 Vp	1600 Vp
Rated AC frequency	50/60 Hz (+/- 10%)	
Rated insulation voltage	630 VAC	690 VAC
Dielectric withstand voltage: **Supply to input** **Supply to heatsink**	 2.5 kVrms 2.5 kVrms	
Integrated varistor	Yes	

Environmental

Working temperature	-20ºC to +60ºC (-4ºF to +140ºF) Note: For operating temperatures >40ºC derating applies
Storage tempreature	-40ºC to +80ºC (-40ºF to 176ºF)
Relative humidity	<95% non-condensing @ 40ºC
Pollution degree	2
Degree of Protection (control circuit)	IP20 (EN/IEC 60529)
Installation category	III
Installation altitude	1000 m
Vibration **Frequency 1** **Frequency 2**	Acc. to IEC60068-2-6 2 [+3/-0]Hz to 25Hz Displacement +/- 1.6mm 25Hz to 100Hz @2g (19.96m/s^2)

Compatibility and conformity

Conformance	EN/IEC 60947-4-2 UL508 Listed (E172877) cUL Listed (E172877) CCC
Approvals	

Electromagnetic compatibility (EMC) - immunity	
Immunity	IEC/EN 61000-6-2
Electrostatic discharge (ESD) **Immunity** **Air discharge, 8kV** **Contact, 4kV**	 IEC/EN 61000-4-2 Performance Criteria 2 Performance Criteria 2
Radiated radio frequency **Immunity** **3V/m, 80 - 1000 MHz**	 IEC/EN 61000-4-3 Performance Criteria 1
Electrical Fast Transient **(Burst) Immunity** **Output: 2kV** **Input: 1kV**	 IEC/EN 61000-4-4 Performance Criteria 2 Performance Criteria 2
Conducted Radio Frequency **Immunity** **10V/m, 0.15 - 80 MHz**	 IEC/EN 61000-4-6 Performance Criteria 1
Electrical Surge Immunity **Output, line to line, 1kV** **Output, line to earth, 2kV** **Input, line to line, 1kV** **Input, line to earth, 2kV**	IEC/EN 61000-4-5 Performance Criteria 2 Performance Criteria 2 Performance Criteria 2 Performance Criteria 2
Voltage Dips Immunity **0% for 10ms/20ms,** **40% for 200ms** **70% for 500ms**	IEC/EN 61000-4-11 Performance Criteria 2 Performance Criteria 2 Performance Criteria 2

Electromagnetic compatibility (EMC) - emissions	
Emission	IEC/EN 61000-6-3
Radio Interference **field emission (Radiated)** **30 - 1000MHz**	 IEC/EN 55011 Class A (Industrial)
Radio interference **field emissions (conducted)**	IEC/EN 55011 Class A (Industrial)

Inputs

	RSBD40..EV..	RSBD40..FV..	RSBD60..GGV..	RSBD60..FFV..
Control voltage (Uc)	A1 - A2: 110 - 400 VAC +10%, -15%	A1 - A2: 24 VAC/VDC +10%, -10%	ST: 100 - 240 VAC +10%, -15%	ST: 24 VAC/VDC +10%, -15%
Control voltage range (Uc)	93.5 - 440 VAC	21.6 - 26.4 VAC/DC	85 – 264 VAC	21.6 - 26.4 VAC/DC
Maximum pick-up voltage	80 VAC	20.4 VAC/DC	80 VAC	20.4 VAC/DC
Minimum drop out voltage	20 VAC	5 VAC/DC	20 VAC	5 VAC/DC
Supply voltage range (Us)	-	-	A1 - A2: 100 - 240 VAC +10%, -15%	A1 - A2: 24 VAC/DC +10%, -10%
Rated AC frequency	45 - 66 Hz	45 - 66 Hz (applies to 24 VAC supply)	45 - 66 Hz	45 - 66 Hz (applies to 24 VAC supply)
Rated insulation voltage (Ui)	500 VAC			
Overvoltage category	III			
Dielectric strength: **Dielectric withstand voltage** **Rated impulse withstand voltage**	2 kVrms 4 kVrms			
Control input current	0.5....5 mA	0.4....1 mA	0.4....3 mA	0.5....1.5 mArms
Input to output response time (Mains supply already present)	< 300 msec			1.5 sec
Input to output response time (Mains supply applied with control)	2.5 sec		2 sec	
Integrated varistor	Yes			

* Note 1: For the Canadian application, the control terminals A1, A2 (or A1, A2, ST for RSBD60 versions) of the RSBD devices shall be supplied by a secondary circuit where power is limited by a transformer, rectifier, voltage divider, or similar device that derives power from a primary circuit, and where the short-circuit limit between conductors of the secondary circuit or between conductors and ground is 1500VA or less. The short-circuit volt ampere limit is the product of the open circuit voltage and the short circuit ampere.

Note 2: RSBD60 soft starters require a separate single phase control source. RSBD60...GG versions: 100-240VAC. Output connections (1 L1, 3 L2, 5 L3, 2 T1, 4 T2,6 T3) are not galvanically isolated from the external supply connections (A1, A2, ST).

Outputs

	RSBD4012….	RSBD4016….	RSBD4025….	RSBD4032….	RSBD4037….
Overload cycle acc. to EN/IEC 60947-4-2 @ 40°C surrounding temperature	AC53b:3.5-1:299				
Maximum number of starts per hour @ 40°C @ rated overload cycle	12				
Rated operational current @ 40°C	12 AAC	16 AAC	25 AAC	32 AAC	37 AAC
Rated operational current @ 50°C	11 AAC	15 AAC	23 AAC	28 AAC	34 AAC
Rated operational current @ 60°C	10 AAC	13 AAC	21 AAC	25 AAC	31 AAC
Minimum time between stop and start	1 sec				
Minimum time between starts	300 sec				
Minimum load current	2 AAC	2 AAC	2 AAC	5 AAC	5 AAC

	RSBD4050…	RSBD..55…	RSBD..70….	RSBD..95….
Overload cycle acc. to EN/IEC 60947-4-2 @ 40°C surrounding temperature	AC53b:3.5-1:299			
Maximum number of starts per hour @ 40°C @ rated overload cycle	12			
Rated operational current @ 40°C	45 AAC	55 AAC	70 AAC	95 AAC
Rated operational current @ 50°C	39 AAC	50 AAC	64 AAC	87 AAC
Rated operational current @ 60°C	35 AAC	46 AAC	59 AAC	80 AAC
Minimum time between stop and start	1 sec			
Minimum time between starts	300 sec			
Minimum load current	5 AAC			

Note: The overload cycle describes the switching capability of the soft starter at a surrounding temperature of 40ºC as described in EN/IEC 60947-4-2. An overload cycle AC53b:3.5-1:299 means that the soft starter can handle a starting current of 3.5xIe for 1second followed by an OFF time of 299 seconds.

Auxiliary relays

	RSBD4012… - RSBD4050…	RSBD..55… - RSBD..95…
Number of output relays	2	3
Function of relays	Alarm, bypassed (top of ramp).	Alarm, bypassed (top of ramp), run.
Rated operational voltage	250 VAC / 30 VDC	
Rated insulation voltage	250 VAC	
Dielectric withstand voltage (Coil to contacts)	2.5 kV	
Overvoltage category	II	
Type of control circuit	Electromechanical relay	
Number of contacts	Alarm and bypassed: 1	Alarm and bypassed: 2 Run: 1
Type of contacts	Alarm: normally closed (NC) Bypassed: normally open (NO)	Alarm and bypassed: changeover (NO, NC) Run: normally open (NO)
Type of current	AC / DC	
Rated operational current	3 Arms @ 250 VAC, 3 Arms @ 30 VDC	

Performance

Current / power ratings: kW and HP @ 40°C

Model	220 - 240 VAC	380 - 415 VAC	Max. Current limit level Irms
RSBD4012.V….	3 kW / 3 HP	5.5 kW / 5 HP	42 Arms
RSBD4016.V….	4 kW / 5 HP	7.5 kW / 7.5 HP	56 Arms
RSBD4025.V….	5.5 kW / 7.5 HP	11 kW / 10 HP	87.5 Arms
RSBD4032.V….	9 kW / 10 HP	15 kW / 15 HP	112 Arms
RSBD4037.V….	9 kW / 10 HP	18.5 kW / 20 HP	129.5 Arms
RSBD4050.V….	11 kW / 15 HP	22 kW/ 25 HP	175 Arms
RSBD4055…. / RSBD6055…	15 kW / 20 HP	30 kW / 30 HP	192.5 Arms
RSBD4070…. / RSBD6070…	20 kW / 25 HP	37 kW / 40 HP	245.0 Arms
RSBD4095…. / RSBD6095…	22 kW / 30 HP	45 kW / 50 HP	285.0 Arms

	440 - 480 VAC	550 - 600 VAC	Max. Current limit level Irms
RSBD6055.V….	30 kW / 30 HP	45 kW / 50 HP	192.5 Arms
RSBD6070.V….	45 kW / 50 HP	55 kW / 75 HP	245.0 Arms
RSBD6095.V….	55 kW / 75 HP	75 kW / 75 HP	285.0 Arms

Ratings:
kW rating according to: IEC/EN 60947-4-2
HP rating according to: UL508

Note: Motor kW ratings are provided as a reference. User shall always ensure that compressor operational current and overload current of the compressor during starting does not exceed the rating of the softstarter being used.

Connection Diagrams

Terminal markings

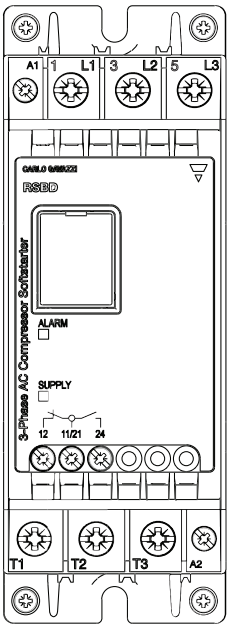

Fig. 3 *RSBD 45mm*

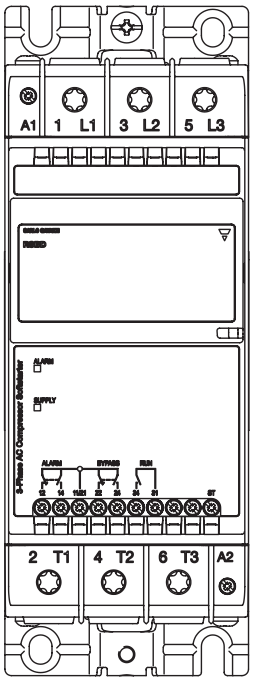

Fig. 4 *RSBD 75mm*

Marking	RSBD 45mm	RSBD 75mm
	RSBD..12.. to RSBD..50..	RSBD..55.. to RSBD..95..
1L1, 3L2, 5L3	Line connections	
2T1, 4T2, 6T3	Load connections	
A1, A2	Control voltage (Supply voltage for RSBD60 models)	
11, 12, 14	Alarm indication (Normally Closed, NC)	Alarm indication (NO, NC, changeover)
21, 22, 24	Top of Ramp indication (Normally Open, NO)	Top of Ramp indication (NO, NC, changeover)
31, 34	-	Run relay indication (NO, normally open)
ST*:	-	Control voltage (start signal)

* only for RSBD60.. models

Wiring diagrams

Valid up to 400 VAC

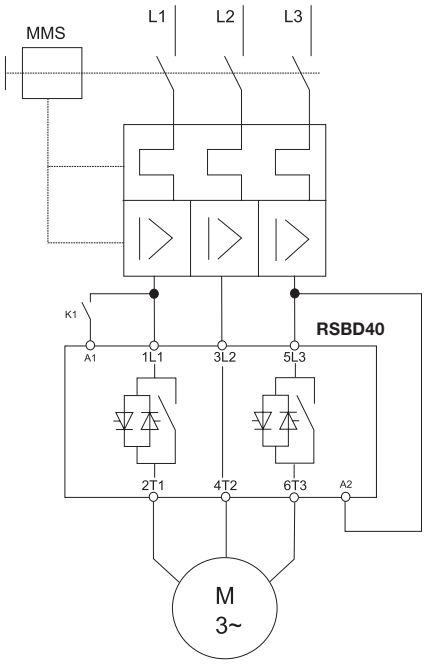

RSBD40...E0V..

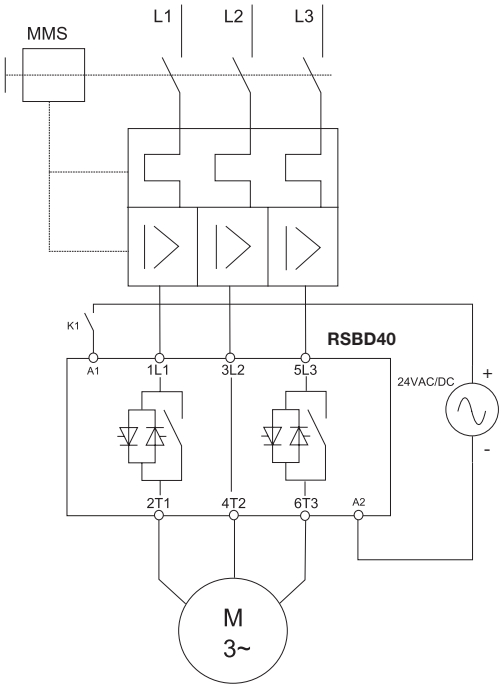

RSBD40...F0V..

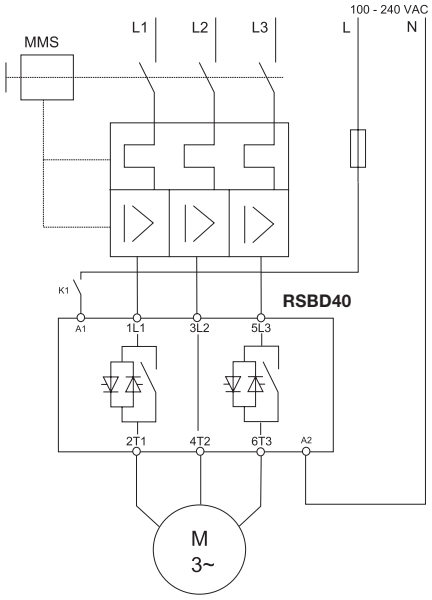

RSBD40...E0V..

Wiring diagrams

IMPORTANT: L1, L2, L3 should already be connected when A1, A2 and ST signals are applied. A minimum delay of 200ms should be allowed between switching of L1, L2, L3 and A1, A2 and ST respectively. If L1, L2 and L3 are not present, when A1, A2 is applied the “Line voltage out of range alarm will be triggered”. The alarm will automatically recover if L1, L2, L3 are within operational range for 1 sec (on power up only).

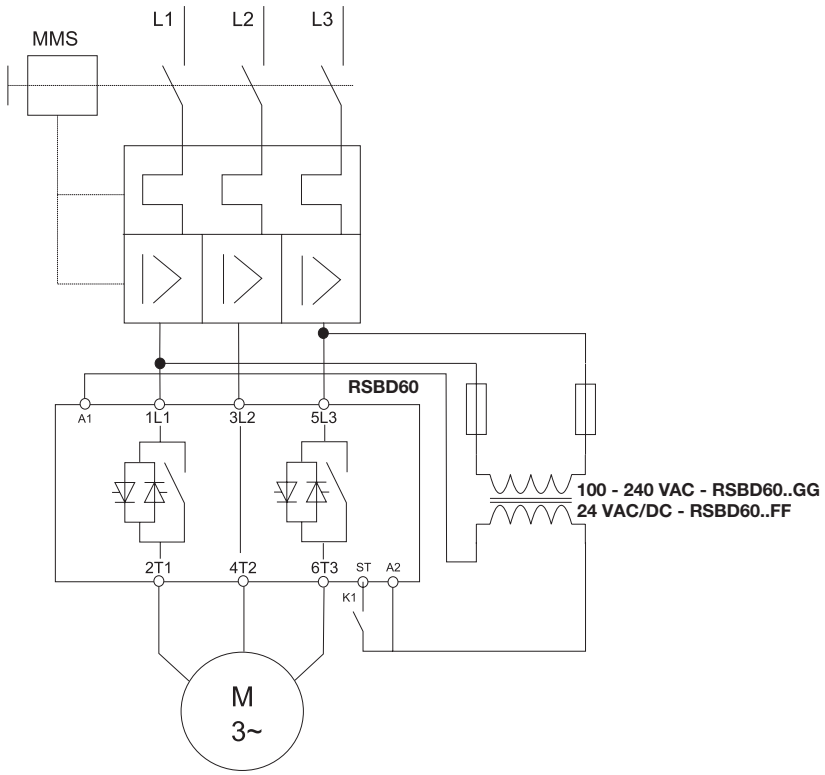

RSBD60...GG..

Note 1: For RSBD60..GG... models apply 100 - 240VAC across A1, A2 terminals.
Note 2: For RSBD60..FF... models, connect A1 to the positive (+) and A2 to the negative (-) terminal of the power supply.
Note 3: ST terminal has to be at the same potential of A2 (refer to wiring diagrams)

Connection specifications

Line conductors 1 L1, 3 L2, 5 L3, 2 T1, 4 T2, 6 T3 Acc. to EN60947-1		
	RSBD…12 to RSBD…50	**RSBD…55 to RSBD…95**
Flexible	2.5 - 10 mm^2 2.5 - 2 x 4 mm^2	-
Rigid (solid or stranded)	2.5 .... 10 mm^2	2 x (10...50 mm^2)
Flexible with end sleeve (ferrule)	2.5 .... 10 mm^2	2 x (10...50 mm^2)
UL/cUL rated data **Rigid (stranded)** **Rigid (solid)** **Rigid (solid or stranded)**	 AWG 6...14 AWG 10...14 AWG2 x 10...2 x 14	 2 x (AWG 8...1/0)
Terminal screws	M4	M8
Maximum tightening torque	2.5 Nm (22 lb.in) with posidrive bit 2	12 Nm (106 lb.in) with Torx TT40 bit
Stripping length	8.0 mm	20.0 mm

Secondary conductors A1, A2 Acc. to EN60998		
	RSBD…12 to RSBD…50	**RSBD…55 to RSBD…95**
Flexible	0.5 .... 1.5 mm^2	-
Rigid (solid or stranded)	0.5 .... 2.5 mm^2	
Flexible with end sleeve (ferrule)	0.5 .... 1.5 mm^2	
UL/cUL rated data **Rigid (solid or stranded)**	AWG 10...18	
Terminal screws	M3	
Maximum tightening torque	0.6 Nm (5.3 lb.in) with posidrive bit 0	
Stripping length	6.0 mm	

Auxiliary conductors 11, 12, 21, 24, (31, 34)*, ST**		
	RSBD…12 to RSBD…50	**RSBD…55 to RSBD…95**
Rigid (solid or stranded)	0.05 ... 2.5 mm^2	
Flexible with end sleeve (ferrule)	0.05 ... 1.5 mm^2	
UL/cUL rated data **11, 12, 21, 24, (31, 34)*, ST**** **Rigid (solid or stranded)**	AWG 30 … 12 AWG 24 ... 12	
Terminal screws **11, 12, 21, 24, (31, 34)*, ST****	M3	
Maximum tightening torque **11, 12, 21, 24, (31, 34)*, ST****	0.45 Nm (4.0 lb.in) posidrive bit 0	
Stripping length	6.0 mm	

Use 75ºC Copper (Cu) conductors
* For RSBD...55 to RSBD...95 models only
**For RSBD60 models only

Troubleshooting

LED status indications

State	Supply (green LED)	Alarm (red LED)
Idle	ON	OFF
Ramping	ON	OFF
Bypass	ON	OFF
Alarm	ON	Flashing
Internal fault	ON	ON

Relay status indication

State	Relay contact position				
	RSBD 45 mm		RSBD 75 mm		
	Alarm (11, 12)	Bypass (21, 24)	Alarm (11, 12, 14)	Bypass (21, 22, 24)	Run (31, 34)
Idle	Closed	Open	11, 12	21, 22	Open
Ramping	Closed	Open	11, 12	21, 22	Closed
Bypass	Closed	Closed	11, 12	21, 24	Closed
Alarm	Open	Open	11, 14	21, 22	Open
Internal fault	N/A	N/A	11, 14	21, 22	Open

Alarms

The RSBD includes a number of diagnostics and protection features each of which is signalled through a flashing sequence on the red LED.

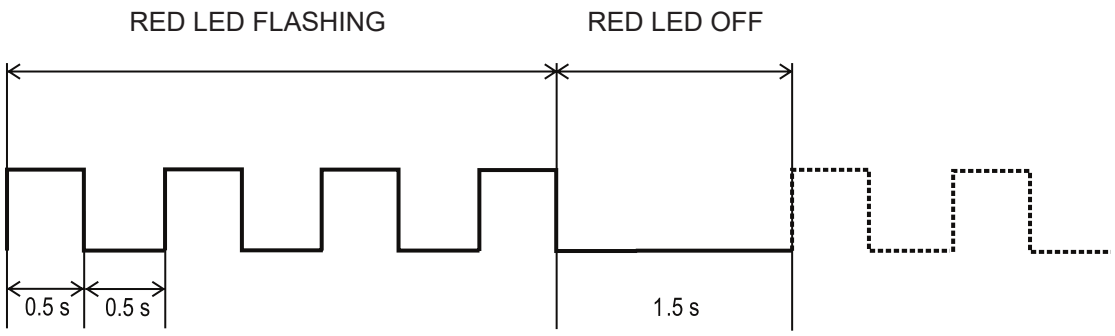

Number of flashes	2
Alarm	Wrong phase sequence
Alarm description	If the connection to the soft starter is not done in the correct sequence (L1, L2, L3), the RSBD will trigger the wrong phase sequence alarm and the motor will not be started.
Alarm recovery period	N/A
Consecutive alarms for hard reset	1
Action to recover alarm	User intervention is required to change the wiring sequence to recover alarm.
Troubleshooting	• Check that wiring on L1, L2, L3 is in the correct sequence.

Number of flashes	3
Alarm	Line voltage out of range
Alarm description	At every power-up the RSBD automatically detects the supply voltage level and determines whether it is working on a 220, 400, 480* or 600* V supply. The under- or over- voltage alarm level is then set at a level of -20% and + 20% (from the measured supply voltage level) respectively. If the supply voltage level is out of these limits for more than 5 seconds then the line voltage out of range alarm will be triggered. * Applies to RSBD60 models. Note: for RSBD60 over-voltage alarm level (for the case of a 600V supply) is 675V (600V + 11%). Note: RSBD 45mm models have a fixed level for undervoltage (174VAC) and for over-voltage (466VAC). The alarm will trigger when the voltage level measured is outside these limits for at least 5 seconds.
Alarm recovery period	5 minutes
Consecutive alarms for hard reset	4
Action to recover alarm	The alarm will self-recover after 5 minutes from when the supply voltage is within limits.
Troubleshooting	• Check supply voltage level across L1, L2, L3 terminals. • Make sure that you are not using a RSBD40 model on a supply voltage > 440 VAC.

Number of flashes	4
Alarm	Frequency out of range
Alarm description	If the frequency measured by the RSBD is >66.5Hz and <44.5Hz for at least 1 second, this alarm will trigger.
Alarm recovery period	5 minutes
Consecutive alarms for hard reset	N/A
Action to recover alarm	Check for any disturbance on the voltage network. The voltage waveform may be disrupted when unfiltered variable frequency drives are used.
Troubleshooting	• In the case where variable frequency drives are present, ensure that proper EMI filters are installed.

Number of flashes	5
Alarm	Locked rotor condition (during ramp)
Alarm description	If a current >= 4 * Ie for 100 msec is detected, the RSBD will issue the locked rotor alarm.
Alarm recovery period	OK
Consecutive alarms for hard reset	2
Action to recover alarm	The alarm will self-recover after 5 minutes. If the soft starter remains in alarm for more than 5 minutes (due to consecutive alarms) then a power reset (reset of L1, L2, L3 for RSBD40 and reset of A1, A2 for RSBD60 models) is required.
Troubleshooting	• Check that the RSBD model is suitably rated for the motor. • Check motor windings resistance to check if motor is damaged.

Number of flashes	6
Alarm	Ramp-up time (> 1sec)
Alarm description	The RSBD measures the current during bypass state. If the current is >1.05 * Ie for at least 1 second, the RSBD will trigger this alarm and switch OFF the output. This condition can result in case of an overload condition or because the RSBD model under-rated for the load it is controlling.
Alarm recovery period	5 minutes
Consecutive alarms for hard reset	2
Action to recover alarm	The alarm will self-recover after a period of 5 minutes. If the alarm is triggered twice consecutively, then the user must switch OFF and then ON the mains (L1, L2, L3 or A1, A2 for RSBD60 models) to perform a hard reset. This will reset the alarm.
Troubleshooting	• Check that the correct model of RSBD is being used • Check that the connections to the compressor are correct • Check for any mechanical blockage on the compressor

Number of flashes	7
Alarm	Over-temperature
Alarm description	The RSBD constantly measures the heatsink and thyristors (SCRs) temperature. If the maximum internal temperature is exceeded (for a minimum of 0.5 sec) an over-temperature alarm is triggered. This condition can be triggered by too many starts per hour, an over-load condition during starting and/or stopping or a high surrounding temperature.
Alarm recovery period	Depends on the cooling period. (If MANUAL reset mode is applied, alarm can be reset by pressing the Test/Reset button). The RSBD will only recover if the internal temperature is within safe limits.
Consecutive alarms for hard reset	4
Action to recover alarm	The alarm will self-recover - the recovery period will depend on the cooling time required by RSBD. The higher the surrounding temperature, the longer the cooling period.
Troubleshooting	• Check that the specified number of starts/hr are not exceeded. • Check that the surrounding temperature around the soft starter is within limits.

Number of flashes	8
Alarm	Current not normal (during bypass)
Alarm description	The RSBD measures the current during bypass state. If the current is >1.15 * Ie for at least 1 second, the RSBD will trigger this alarm and switch OFF the output. This condition can result in case of an overload condition or because the RSBD model under-rated for the load it is controlling.
Alarm recovery period	5 minutes
Consecutive alarms for hard reset	2
Action to recover alarm	The alarm will self-recover after a period of 5 minutes. If the alarm is triggered twice consecutively, then the user must switch OFF and then ON the mains (L1, L2, L3 or A1, A2 for RSBD60 models) to perform a hard reset. This will reset the alarm.
Troubleshooting	• Check that the correct model of RSBD is being used. • Check that the connections to the compressor are correct. • Measure the current with a clamp meter on any of L1, L2, L3 phases and check if the current is within the expected levels. If the current is higher than the RSBD rated current, change the RSBD to a larger model.

Number of flashes	9
Alarm	Supply voltage unbalance
Alarm description	The RSBD monitors the voltage levels on all the phases and if it measures a difference of at least 10% between any of L1, L2, L3 for at least 5 seconds, the alarm 9 will be triggered. When the alarm is triggered the RSBD will switch OFF the output.
Alarm recovery period	5 minutes (from the moment the %voltage unbalance between all the phases is < 10%)
Consecutive alarms for hard reset	N/A
Action to recover alarm	The alarm will start a self-recvery of 5 minutes from the moment the voltages on L1, L2, L3 are within 10% of each other. If the voltage unbalance remains >10%, the RSBD will remain in alarm state.
Troubleshooting	• Check for any loose connections on the mains and load side. • Check voltage across L1 - L2, L2 - L3, L1 - L3 and see if there is any unbalance. • Check resistance on motor windings to see if any of the coils are damaged.

Number of flashes	Fully ON *
Alarm	Internal fault
Alarm description	In case there is an internal fault in the RSBD circuitry, the Red LED will remain continuously ON.
Alarm recovery period	-
Consecutive alarms for hard reset	1
Action to recover alarm	Note: this alarm is not resettable and it is suggested to replace the unit and contact a Carlo Gavazzi representative should this alarm occur.
Troubleshooting	• Check resistance across L1 - T1 and L3 - T3 to check for any short. • If any of the SCRs is damaged, replace the soft starter.

* For RSBD...55 to RSBD...95 models only

Short circuit protection

Protection Co-ordination, Type 1 vs Type 2

Type 1 protection implies that after a short circuit, the device under test will no longer be in a functioning state.

In Type 2 co-ordination the device under test will still be functional after the short circuit. In both cases, however the short circuit has to be interrupted. The fuse between enclosure and supply shall not open. The door or cover of the enclosure shall not be blown open. There shall be no damage to conductors or terminals and the conductors shall not separate from terminals. There shall be no breakage or cracking of insulating bases to the extent that the integrity of the mounting of live parts is impaired. Discharge of parts or any risk of fire shall not occur.

The product variants listed in the table hereunder are suitable for use on a circuit capable of delivering not more than 5,000Arms (or 10,000Arms for RSBD..70 - RSBD..95) Symmetrical Amperes, 400Volts (or 600V for RSBD60 models) maximum when protected by fuses.

Tests at 5,000Arms (or 10,000Arms for RSBD..70 - RSBD..95) were performed with Class RK5 fuses, fast acting; please refer to the table below for maximum allowed ampere rating of the fuse. Use fuses only.

Co-ordination Type 1 (UL508) – Time Delay Fuses

Part No.	Max. fuse size [A]	Class	Current [kA]	Max. voltage [VAC]
RSBD4012….	20	RK5	5	600
RSBD4016….	20			
RSBD4025….	25			
RSBD4032….	35			
RSBD4037….	50			
RSBD4050….	50			
RSBD4055…. / RSBD6055…	60			
RSBD4070…. / RSBD6070…	100		10	
RSBD4095…. / RSBD6095…	100			

Co-ordination Type 1 – Manual Motor Starters

Item No.	Model No.	Current [kA]	Max. voltage [VAC]
RSBD4012….	GMS32S-17 /GMS32H-17	10	400
RSBD4016….	GMS32S-17 /GMS32H-17		
RSBD4025….	GMS32H-32		
RSBD4032….	GMS32H-32		
RSBD4037….	GMS63S-50 /GMS63H-50		
RSBD4050….	GMS63S-50 /GMS63H-50		
RSBD4055…. / RSBD6055…	GMS63H-63A		
RSBD4070…. / RSBD6070…	GMS100S-75A		
RSBD4095…. / RSBD6095…	GMS100S-100A		

Products protected with manual motor starters must be wired with a minimum length of 1.5m Cu wire conductor. For products rated 12, 16, 25A the maximum cross sectional area shall be of 2.5 mm^2 , for products rated 32, 37, 45, 55A the maximum cross-sectional area shall be of 16 mm^2 and for products rated 70, 95A this shall be of a maximum of 50mm^2.

The length includes the conductors from the voltage source to the manual manual starter, from the manual motor starter to the soft starter and from the soft starter to the load.

Accessories

RTPM (Interconnecting Clip)

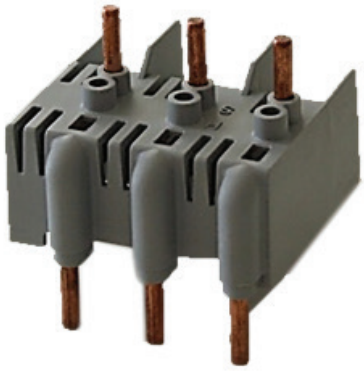

Ordering Key

Interconnecting clip for GMS-32-H motor starter
- Qty: 10pcs per bag

RTPMGMS32HL

Interconnecting clip for GMS-32-S motor starter
- Qty: 10pcs per bag

RTPMGMS32SL

For RSBD 45mm models only

RFCG (Finger Guards)



Ordering Key

RFCG X6

Finger/ cable guards
6 pcs per box

- For RSBD 75mm models only

Accessories

GMS (Manual Motor Starter)



GMS32H



GMS32S



GMS63H / GMS63S



GMS32H

Ordering Key GMS-32S-13A

Type
S: Standard, H: High breaking capacity
Rated operational current

- Overload and short-circuit protection
- Operational current range: 0.16 up to 32AAC
- Magnetic release 13xIe max
- Adjustable thermal release
- Ambient temperature compensation
- Trip Class 10
- CE, cULus

Ordering Key GMS-63H-13A

Type
S: Standard, H: High breaking capacity
Rated operational current

- Overload and short-circuit protection
- Operational current range: 10 up to 63AAC
- Magnetic release 13xIe max
- Adjustable thermal release
- Ambient temperature compensation
- Trip Class 10
- CE, cULus

Note: For higher trip classes please contact your Carlo Gavazzi representative

Ordering Key GMS-100S-100A

Type
S: Standard, H: High breaking capacity
Rated operational current

- Overload and short-circuit protection
- Operational current range: up to 100AAC
- Magnetic release 13xIe max
- Adjustable thermal release
- Ambient temperature compensation
- Trip Class 10
- CE, cULus

Accessories

GMS Mounting Instructions

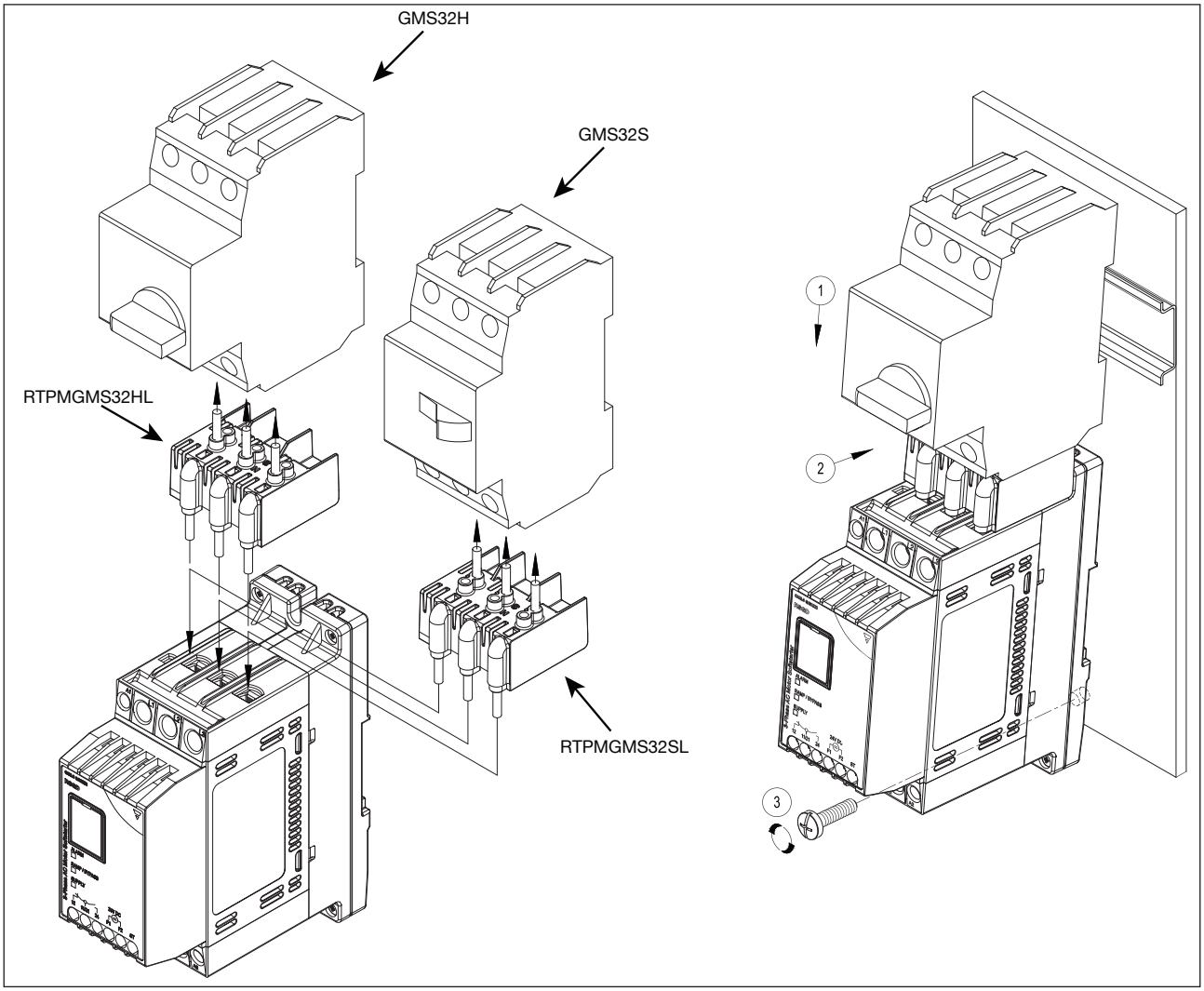

The following procedure should be followed when mounting the GMS motor starter onto the RSBD 45mm soft starter:-

Step 1: Unscrew the terminals on the RSBD and GMS units and insert the proper RTPM clip in the respective terminals.
Step 2: Tighten the screws on the GMS and RSBD units respecting the maximum torque specified.
Step 3: Mount the complete assembly to the DIN rail and screw the RSBD to the panel as shown in the diagram.

Note: Always mount the GMS motor starter on the supply side (L1, L2, L3) of the RSBD soft starter.

Important: Make sure that the handle on the GMS starter is in the OFF position before installing and uninstalling.