Soft Starter
Three-Phase Scroll Compressor Soft Starter
Types RSBT

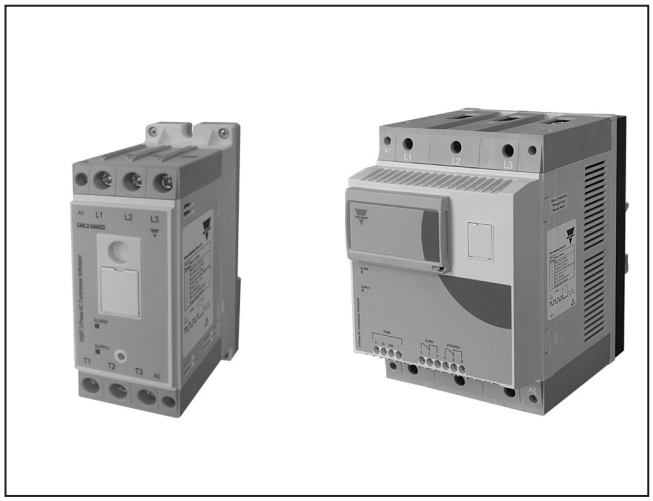

- Soft starting of 3-phase scroll compressors up to 95 Amp
- Patented auto-adaptive algorithm for optimum inrush current reduction (No user settings required)
- 3-Phase controlled solution
- Integrated bypass relays
- Internally supplied
- Short ramp up time: <600 ms
- Rated operational voltage:
  RSBT22: 220 VAC
  RSBT40: 400 VAC
  RSBT48: 220 - 480 VAC
- Rated operational current: 16, 25, 32, 55, 70, 95 AAC
- Over-temperature, Overcurrent, Locked Rotor protection
- cULus, CE, CCC, RoHS compliant
- HP version for multi-compressor systems
- VDE approved (up to 32 AAC) - for RSBT...HPV models
  Note: Other models (RSBT22/RSBT40) only VDE approved up to 15Arms

Product Description

RSBT is an easy to use soft starter for scroll compressors up to 95Amp nominal current.

The units are equipped with a patented auto-adaptive algorithm that automatically adapts itself to the specific compressor it is controlling ensuring that an optimum inrush current reduction is achieved.

RSBT is a 3-phase controlled solution and is internally bypassed - resulting in less heat dissipation inside the panel.

Short Circuit and Overload protection are not provided with the controller and must be procured separately.

Ordering Key

RSB T 40 16 E V 11 H P V

- Compressor Soft Starter
- Controlled Phases
- Operational Voltage
- Rated Operational Current
- Control Voltage
- Version

Note: above ordering code applies to RSBT models up to 32A

Ordering Key

RSB T 48 55 C V0

- Compressor Soft Starter
- Controlled Phases
- Operational Voltage
- Rated Operational Current
- Control Voltage
- Version

Note: above ordering code applies to RSBT models from 55 - 95A

Approvals

Type Selection

Type	Operational Voltage Ue	Rated Operational Current Ie @40°C	Control Voltage Uc	Version
RSBT	22: 220 VAC, +10% -15% 40: 400 VAC, +10% -15%	16: 16 Arms 25: 25 Arms 32: 32 Arms	E: 110 – 400 VAC +10% -15%	V11: DIN Mount, V51: DIN Mount (UL approved) V21: DIN Mount & RFPMV00 module V61: DIN Mount & RFPMV00 module (UL approved) V..HP: Optimised algorithm for multi-compressor systems & high pressure starts V.HPV: VDE approved (up to 32 AAC) VC: RS485 MODBUS serial communication + Relay VC1HP: RS485 MODBUS serial communication outputs
	48: 220 - 480 VAC, +10% -15%	55: 55 Arms 70: 70 Arms 95: 95 Arms	C: 24 VAC/DC ±10% and 110 - 400 VAC +10% -15%	V0: Relay outputs

Specifications are subject to change without notice. Pictures are just an example. For special features and/or customization, please refer to our sales network. 08/11/16

CARLO GAVAZZI

Selection Guide

Operational Voltage Ue	Control Voltage Uc	Options	Rated Operational Current Ie		
Housing 1 (45mm)			**16 Arms**	**25 Arms**	**32 Arms**
220 VAC	110 - 400 VAC	HP	RSBT2216EV11HP	RSBT2225EV11HP	RSBT2232EV11HP
		HP + Relay outputs	RSBT2216EV61HP	RSBT2225EV61HP	RSBT2232EV61HP
		HPV	RSBT2216EV11HPV	RSBT2225EV11HPV	RSBT2232EV11HPV
400 VAC	110 - 400 VAC	No options	RSBT4016EV11	RSBT4025EV11	RSBT4032EV11
		HP	RSBT4016EV11HP	RSBT4025EV11HP	RSBT4032EV11HP
		HP + Relay outputs	RSBT4016EV21HP	RSBT4025EV21HP	RSBT4032EV21HP
		HP	RSBT4016EV51HP	RSBT4025EV51HP	RSBT4032EV51HP
		HP + Relay outputs	RSBT4016EV61HP	RSBT4025EV61HP	RSBT4032EV61HP
		HPV	RSBT4016EV11HPV	RSBT4025EV11HPV	RSBT4032EV11HPV
		HPV + Relay outputs	RSBT4016EV21HPV	RSBT4025EV21HPV	RSBT4032EV21HPV
		HPV	RSBT4016EV51HPV	RSBT4025EV51HPV	RSBT4032EV51HPV
Housing 2 (120mm)			**55 Arms**	**70 Arms**	**95 Arms**
220 - 480 VAC	24 VAC/DC & 110 - 400 VAC	Relay outputs	RSBT4855CV0	RSBT4870CV0	RSBT4895CV0
		RS485 + Relay outputs	RSBT4855CVC	RSBT4870CVC	RSBT4895CVC
Housing 1 (45mm)			**16 Arms**	**25 Arms**	**32 Arms**
220 - 400 VAC	110-400VAC (or Modbus)	RS485 Modbus communication	RSBT4016EVC1HP	RSBT4025EVC1HP	RSBT4032EVC1HP

General Specifications

Starting Method	Current limit, auto-adaptive		
Ramp-up time	< 1s		
Ramp-down time	0s		
Initial Torque	Initial torque will vary indirectly through the variation of the current limit through the autoadaptive algorithm		
Under/Overvoltage protection	RSBT22	RSBT40	RSBT48
Recovery from Undervoltage	187VAC	330VAC	200VAC
Recovery from Overvoltage	250VAC	470VAC	500VAC

Status Indication LEDs	
Power Supply ON	Green LED
Recovery Mode (alarm condition)	Flashing Red LED
Alarm	Red LED
Special Alarm[1]	Green LED OFF and Red LED ON
Vibration	Acc. to IEC60068-2-6
Frequency 1	2 [+3/-0] Hz to 25 Hz Displacement +/- 1.6mm
Frequency 2	25 Hz to 100 Hz @ 2g (19.96m/s^2)

[1] Only for RSBT...HPV models

Input Specifications

	RSBT..EV..	RSBT..CV..
Control Voltage Uc*	A1 – A2: 110 – 400 VAC (+10%, -15%)	A1 – A2: 24 VAC/DC (-10%, +10%) & 110 - 400 VAC (-15%, + 10%)
Control Voltage Range Uc	93.5 – 440 VAC	21.6 – 26.4 VAC/DC (for 24 VAC/DC input) & 93.5 - 440 VAC (for 110 - 400 VAC input)
Max. Pick Up Voltage	80 VAC	20.4 VAC/DC (for 24 VAC/DC input)
Min. Drop Out Voltage	20 VAC	5 VAC/DC (for 24 VAC/DC input)
Rated AC frequency	50/60 Hz +/- 10%	50/60 Hz +/- 10%
Rated Insulation Voltage Ui	630 VAC	690 VAC
Dielectric Strength		
Dielectric withstand voltage	2 kVrms	/
Rated Impulse withstand voltage	4 kVrms	6kVrms
Input to Heatsink	/	3.5kVrms
Control Input Current	3...6 mAAC	0.4...5 mAAC
Input to Output response time	< 100 ms	< 300 ms
Integrated varistor	Yes	Yes

*** Note 1:** For the Canadian application, the control terminals A1, A2 of the RSBT devices shall be supplied by a secondary circuit where power is limited by a transformer, rectifier, voltage divider, or similar device that derives power from a primary circuit, and where the short-circuit limit between conductors of the secondary circuit or between conductors and ground is 1500VA or less. The short-circuit volt ampere limit is the product of the open circuit voltage and the short circuit ampere.

Specifications are subject to change without notice. Pictures are just an example. For special features and/or customization, please refer to our sales network. 08/11/16

Output Specifications

	RSBT..16….	RSBT..25….	RSBT..32….
Overload cycle acc. to EN/IEC 60947-4-2 @ 40°C surrounding temperature	AC53b:2.5-1:60	AC53b:3.6-1:60	AC53b:3.4-1:60
Maximum number of starts per hour @ 40°C @ rated overload cycle	12	12	12
Rated operational current @ 40°C	16 AAC	25 AAC	32 AAC
Rated operational current @ 50°C	16 AAC	25 AAC	25 AAC
Minimum time between stop and start	1 sec	1 sec	1 sec
Minimum time between starts	300 sec	300 sec	300 sec
Minimum load current	2 AAC	2 AAC	2 AAC

	RSBT..55….	RSBT..70….	RSBT..95….
Overload cycle acc. to EN/IEC 60947-4-2 @ 40°C surrounding temperature	AC53b:3.5-1:299	AC53b:3.5-1:299	AC53b:3.5-1:299
Maximum number of starts per hour @ 40°C @ rated overload cycle	12	12	12
Rated operational current @ 40°C	55 AAC	70 AAC	95 AAC
Rated operational current @ 50°C	50 AAC	62 AAC	87 AAC
Minimum time between stop and start	1 sec	1 sec	1 sec
Minimum time between starts	300 sec	300 sec	300 sec
Minimum load current	5 AAC	5 AAC	5 AAC

Note: The overload cycle describes the switching capability of the soft starter at a surrounding temperature of 40°C as described in EN/IEC 60947-4-2. An overload cycle AC53b:3.5-1:299 means that the soft starter can handle a starting current of 3.5xIe for 1second followed by an OFF time of 299 seconds.

Supply Specifications

	RSBT22….	RSBT40….	RSBT48….
Operational Voltage Range	187 – 253 VACrms	340 – 440 VACrms	187 – 528 VAC rms
Supply Current at idle	< 30 mAAC	< 30 mAAC	< 40 mAAC
Blocking Voltage	800 Vp	1200 Vp	1600 Vp
Rated AC frequency		50/60 Hz +/-10%	
Rated Insulation Voltage	630 VAC	630 VAC	690 VAC
Dielectric Strength			
Dielectric withstand voltage	/	/	2kVrms
Supply to Input	2.5kVrms	2.5kVrms	/
Supply to Heatsink	2.5kVrms	2.5kVrms	2kVrms
Rated Impulse withstand voltage	/	/	6kV (1.2/50 µs)
Integrated Varistor		Yes	

Environmental Specifications

Operating Temperature		
RSBT..16EV..	Ie<=16 AAC	-20°C to +60°C (-4°F to +140°F)
RSBT..25EV..	Ie<=25 AAC	-20°C to +55°C (-4°F to +131°F)
RSBT..32EV..	Ie<=32 AAC	-20°C to +50°C (-4°F to +122°F)
RSBT48...		-20°C to +60°C (-4°F to +140°F)
Storage Temperature		
RSBT22...		-40°C to +80°C (-40°F to 176°F)
RSBT40...		-40°C to +80°C (-40°F to 176°F)
RSBT48...		-30°C to +85°C (-22°F to 185°F)
Relative Humidity		<95% non-condensing @ 40°C

Pollution Degree	
RSBT22...	2
RSBT40...	2
RSBT48...	3
Degree of Protection (control circuit)	
RSBT22...	IP20 (EN/IEC 60529)
RSBT40...	IP20 (EN/IEC 60529)
RSBT48...	IP20 – Housing IP00 – Terminal Block
Installation Category	III
Installation altitude	1000m

RS485 Communication Specifications

Type	Bi-directional (static and dynamic variables and parameters)
Functions	Configuring the device Start/Stop Modifying set-point parameters Monitoring of measured variables
Connection	2-wires (to reduce the noise use a shielded cable and connect the shield to GND terminal and to the ground at the same point.
Address	Default: 1 1-247, selectable via software
Protocol	MODBUS (RTU)
Factory defined data format	Data bits "8", parity "none", stop bit "1" Selectable by software: Parity: None, Odd, Even
Baud Rate	Default: 9.6k bits/s Selectable by software: 4.8k, 9.6k, 19.2k, 38.4k
Insulation	
RS485 port to power	1.9kV
RS485 port to aux. relays	1.5kV
RS485 port to control	1.8kV
RS485 port to heatsink	0.5kV

Note: In the RSBT Modbus versions, the default control mode is A1 - A2. If the user wants to control the RSBT via Modbus, then the respective register must be updated first.

Dimensions

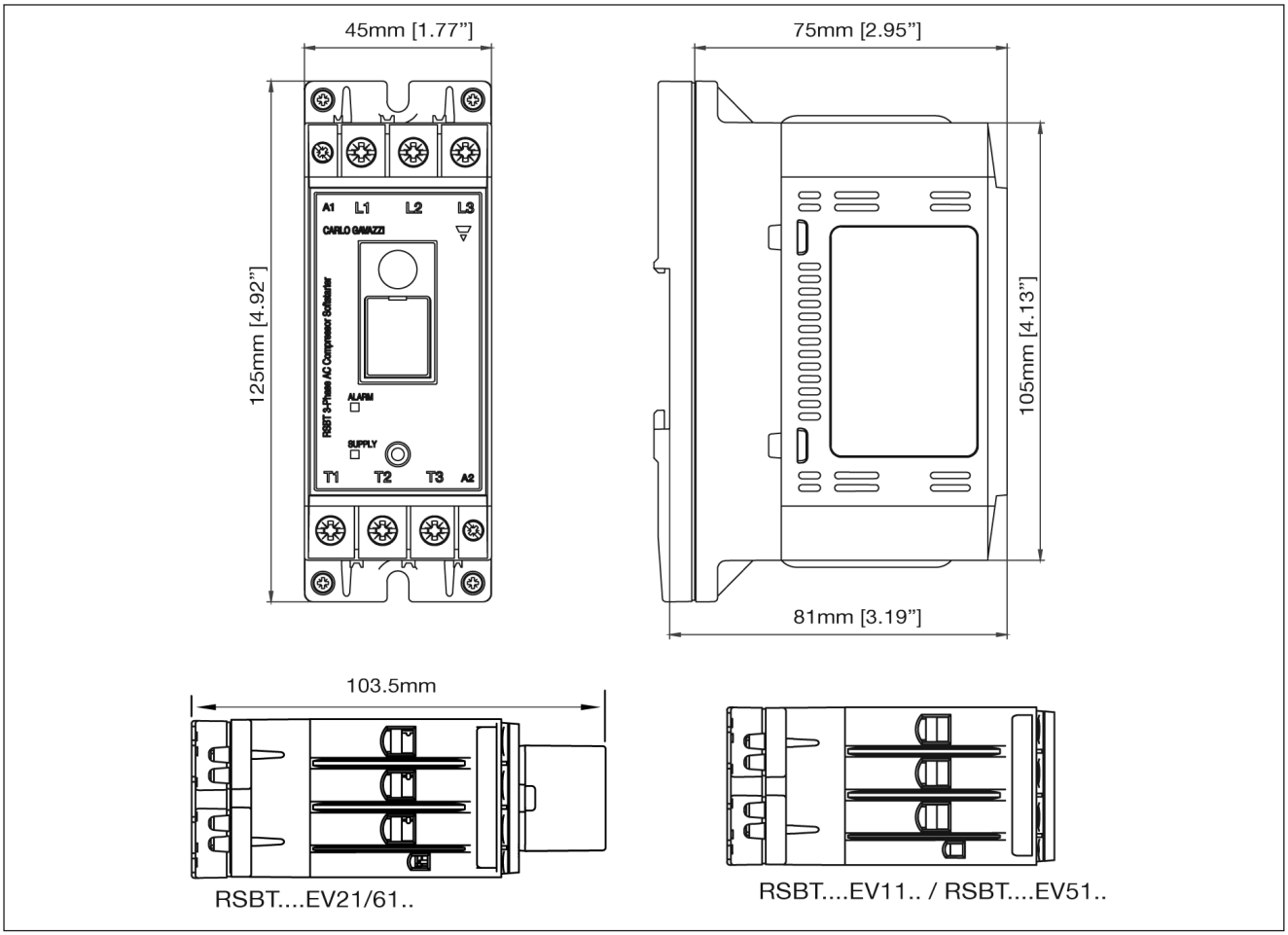

Specifications are subject to change without notice. Pictures are just an example. For special features and/or customization, please refer to our sales network. 08/11/16

Dimensions

DIN RAIL ADAPTER VERSION

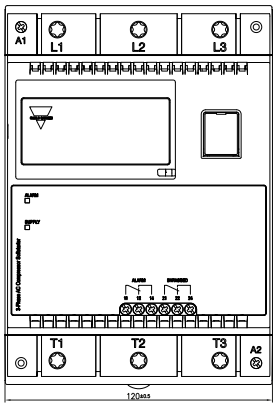

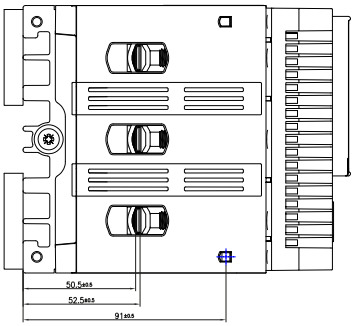

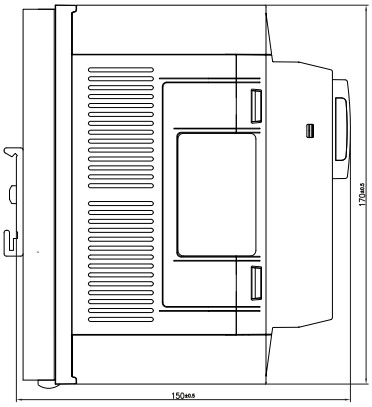

SURFACE MOUNT ADAPTER VERSION

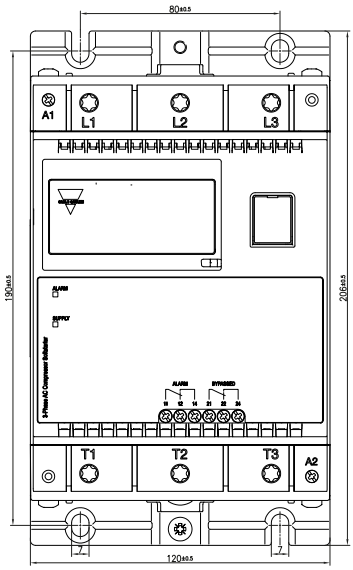

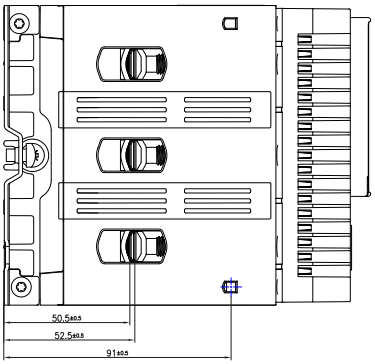

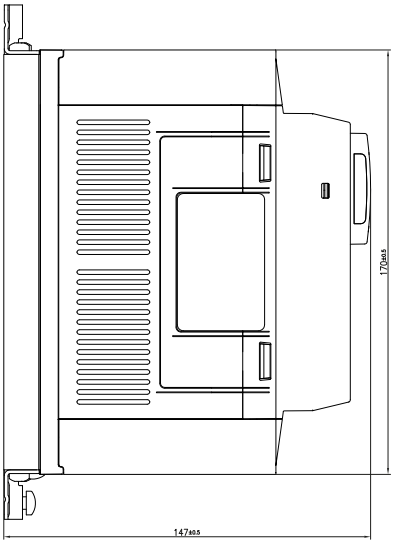

Connection Specifications

	RSBT22... / RSBT40...	RSBT48...
Line conductors		
L1, L2, L3, T1, T2, T3		
Acc. to EN60947-1		
Flexible	2.5 ….. 10 mm^2	-
	2.5 ….. 2 x 4 mm^2	-
Rigid (solid or stranded)	2.5 ….. 10 mm^2	2 x (10...50 mm^2)
Flexible with end sleeve (ferrule)	2.5 ….. 10 mm^2	2 x (10...50 mm^2)
UL/cUL rated data		
Rigid (stranded)	AWG 6...14	-
Rigid (solid)	AWG 10...14	-
Rigid (solid or stranded)	AWG 2x10...2x14	2 x (AWG 8...1/0)
Terminal screws	6 x M4	M8
Max. tightening torque	2.5 Nm (22 lb.in) with Posidrive bit 2	12 Nm (106 lb.in) with Torx TT40 bit
Stripping length	8.0 mm	20 mm
Secondary conductors		
A1, A2		
Acc. to EN60998		
Flexible	0.05 ... 1.5 mm^2	-
Rigid (solid or stranded)	0.05 ... 2.5 mm^2	0.05 ... 1.5 mm^2
Flexible with end sleeve (ferrule)	0.05 ... 1.5 mm^2	0.05 ... 2.5 mm^2
UL/cUL rated data		
Rigid (solid or stranded)	AWG 10...18	AWG 10...18
Terminal screws	9 x M3	M3
Max tightening torque	0.6Nm (5.3lb.in) with Posidrive bit 0	0.6Nm (5.3lb.in) with Posidrive bit 0
Stripping length	6.0 mm	6.0 mm
Auxiliary conductors	**RSBT...V2.../V6...: 11, 12 ,14, A(-), B(+), GND**	**11, 12, 14, 21, 22, 24, A(-), B(+), GND, T**
Rigid (solid or stranded)	0.2 ... 4 mm^2	0.05 ... 2.5 mm^2
Flexible with end sleeve (ferrule)	0.2 ... 2.5 mm^2	0.05 ... 1.5 mm^2
UL/cUL rated data		
Rigid (solid or stranded)	AWG 24...12	AWG 30...12
Terminal screws	M2.5	M3
Max. tightening torque	0.8 Nm (7.0 lb.in)	0.8 Nm (7.0 lb.in)
Stripping length	6 mm	6 mm

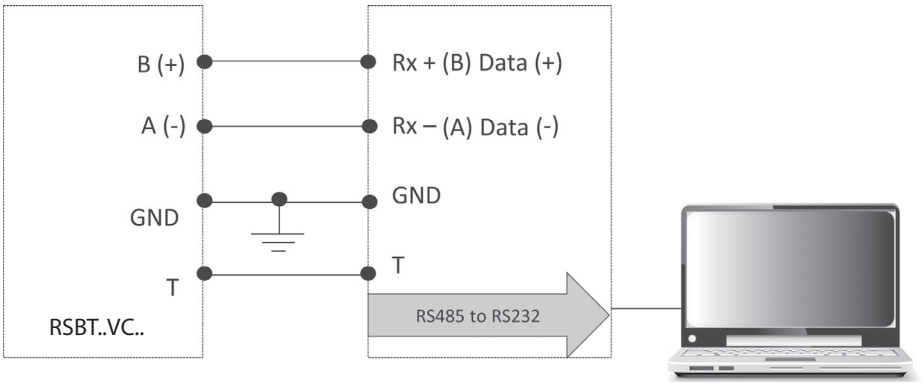

Note: To minimize the reflections from the end of the RS485 cable it is required to place a line termination near each of the 2 ends of the bus by a proper resistor.

Specifications are subject to change without notice. Pictures are just an example. For special features and/or customization, please refer to our sales network. 08/11/16

Terminal Markings

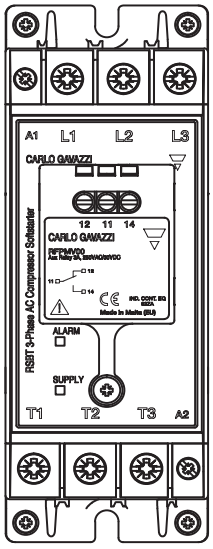

	RSBT..V11.. RSBT..V51..	RSBT..V21.. RSBT..V61..	RSBT..VC1HP
L1, L2, L3	Line connections	Line connections	Line connections
T1, T2, T3	Load connections	Load connections	Load connections
A1, A2	Control voltage	Control voltage	Control voltage
11, 12, 14	-	Alarm indication (Changeover contact)	Alarm indication (Changeover contact)
A (-), B(+), GND	-	-	Serial communication connections

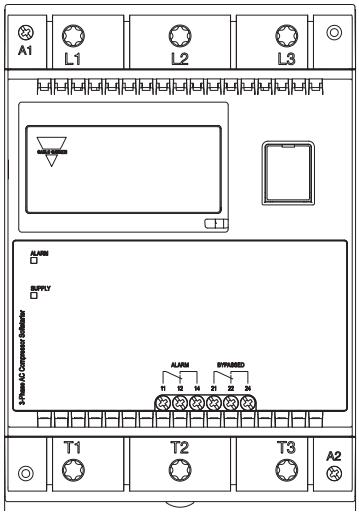

	RSBT48..CV0	RSBT48..CVC
L1, L2, L3	Line connections	Line connections
T1, T2, T3	Load connections	Load connections
A1, A2	Control voltage	Control voltage
11, 12, 14	Alarm indication (Changeover contact)	Alarm indication (Changeover contact)
21, 22, 24	Top of ramp indication (Changeover contact)	Top of ramp indication (Changeover contact)
A (-), B(+), GND, T	-	Serial communication connections

Wiring Diagrams

Note: Valid up to 400VAC

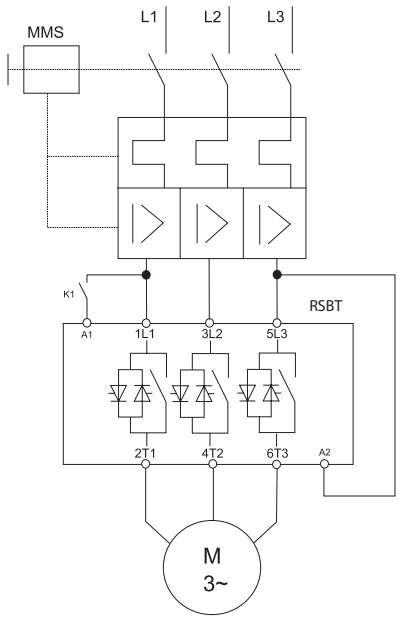

Note: applies only to RSBT48 models

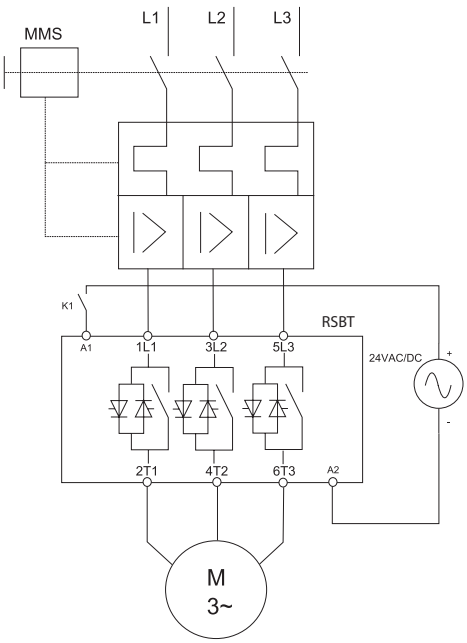

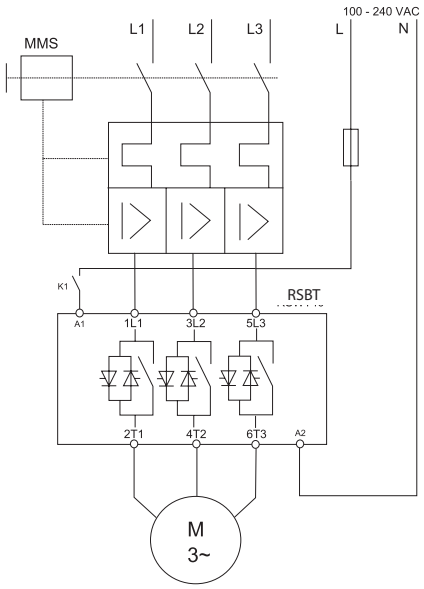

Specifications are subject to change without notice. Pictures are just an example. For special features and/or customization, please refer to our sales network. 08/11/16

Auxiliary Relays

	RSBT22... / RSBT40...	RSBT48...
Rated operational voltage	250 VAC/ 30 VDC	250 VAC/ 30 VDC
Rated insulation voltage	250	250
Dielectric withstand voltage (Coil to contacts)	2.5kV	2.5kV
Overvoltage category	II	II
Number of output relays	1	1
Fault		
Terminal markings	11/12/14	11/12/14
Type of control circuit	Electromechanical relay	Electromechanical relay
Number of contacts	2	2
Type of contacts	Changeover (NO, NC)	Changeover (NO, NC)
Type of current	AC/DC	AC/DC
Rated operational current	3A, 250VAC	3A, 250VAC
	3A, 30VDC	3A, 30VDC
Bypassed (Top of ramp)		
Terminal markings	-	21/22/24
Type of control circuit	-	Electromechanical relay
Number of contacts	-	2
Type of contacts	-	Changeover (NO, NC)
Type of current	-	AC/DC
Rated operational current	-	3A, 250VAC
	-	3A, 30VDC

Electromagnetic Compatibility

	RSBT22... / RSBT40...	RSBT48...
Immunity	IEC/EN 61000-6-2	IEC/EN 61000-6-2
Electrostatic Discharge (ESD) Immunity	IEC/EN 61000-4-2	IEC/EN 61000-4-2
Air discharge: 8 kV	Performance Criteria 2	Performance Criteria 1
Contact: 4 kV	Performance Criteria 2	Performance Criteria 2
Electrical Fast Transient (Burst) Immunity	IEC/EN 61000-4-4	IEC/EN 61000-4-4
Output: 2 kV	Performance Criteria 2	Performance Criteria 1
Output: 4 kV	-	Performance Criteria 2
Input: 1 kV	Performance Criteria 2	-
Input: 2 kV	-	Performance Criteria 1
Electrical Surge Immunity	IEC/EN 61000-4-5	IEC/EN 61000-4-5
Output, line to line, 1 kV	Performance Criteria 2	Performance Criteria 1
Output, line to earth, 2 kV	Performance Criteria 2	Performance Criteria 1
Input, line to line, 1 kV	Performance Criteria 2	Performance Criteria 1
Input, line to earth, 1 kV	-	Performance Criteria 1
Input, line to earth, 2 kV	Performance Criteria 2	-
Rated Radio Frequency Immunity	IEC/EN 61000-4-3	IEC/EN 61000-4-3
3 V/m, 0.15 - 80 MHz	Performance Criteria 1	-
10 V/m, Frequency Range	-	Performance Criteria 1
Conducted Radio Frequency Immunity	IEC/EN 61000-4-3	IEC/EN 61000-4-3
10 V/m, 0.15 - 80 MHz	Performance Criteria 1	-
140 dBuV, Frequency Range	-	Performance Criteria 1
Conducted Radio Frequency Immunity	IEC/EN 61000-4-6	IEC/EN 61000-4-6
10 V/m, 0.15 - 80 MHz	Performance Criteria 1	-
140 dBuV, Frequency Range	-	Performance Criteria 1
Emission	IEC/EN 60947-4-2	IEC/EN 60947-4-2
Radio Interference Field Emissions (Radiated)	CISPR 11 IEC/EN 55011, Class B	Class A
Radio Interference Field Emissions (Conducted)	CISPR 11 IEC/EN 55011, Class B	Class A
Voltage Dips & Interruptions	IEC/EN 61000-4-11	IEC/EN 61000-4-11
	RSBT RSBT...HPV	
0% Ue & Uc 5000 ms	PC2 PC 3	20 ms, PC2
40% Ue & Uc 100/1000 ms	PC2 PC2 / PC3	200 ms, PC2
0% Ue & Uc 10 ms	PC2 PC2	5000 ms, PC2
Harmonics	IEC/EN 61000-3-2[1]	-
Flicker	IEC/EN 61000-3-3[1]	-

CARLO GAVAZZI

Housing Specifications

Weight (approx)	
RSBT.....V11../V51..	425g
RSBT.....V21./V61	460g
RSBT4855...	2.8kg
RSBT4870...	2.8kg
RSBT4895...	3.0kg

Material	PA66
Material colour	RAL7035
Terminal Colour	RAL7040
Mounting	DIN or Panel (accessory included)

Agency Approvals and Conformances

	RSBT..VC1HP	RSBT..V11.. RSBT..V21HP	RSBT..V51HP RSBT..V61HP	RSBT..V..HPV	RSBT48..
Conformance	IEC/EN 60947-4-2	IEC/EN 60947-4-2	IEC/EN 60947-4-2	IEC/EN 60947-4-2	IEC/EN 60947-4-2
Agency Approvals	-	-	UL Listed (E172877)	UL Listed (E172877)*	UL Listed (E172877)
	-	-	cUL Listed (E172877)	cUL Listed (E172877)*	cUL Listed (E172877)
	CCC	CCC	CCC	CCC	CCC
	-	VDE: acc. to EN60335-1, EN60335-2-40 (Up to 15 Arms)	VDE: acc. to EN60335-1, EN60335-2-40 (Up to 15 Arms)	VDE: acc. to EN60335-1, EN60335-2-40 (Up to 32 Arms)	-

*** Note:** applies to RSBT.V51HPV versions only

Mode of Operation

Auto Adaptive Algorithm (Patented)
RSBT series of soft starters includes an innovative auto-adaptive algorithm (Patented) such that an optimum starting current performance is achieved at every compressor start. This feature is active at every compressor start. Appropriate parameters are automatically set by the soft starter in order to achieve an optimum inrush current reduction whilst maintaining a ramp-up time < 1sec.

In case of Locked rotor/ramp-up time alarm, default parameter settings are restored automatically. During the subsequent compressor starts, the auto-adaptive function will start optimising such parameters automatically once again.

HP Mode of Operation
The RSBT shall try to start the compressor at the set current limit. Depending on the load requirement, the current limit will be gradually increased up to a maximum of the default current limit, after which the RSBT will switch in bypass mode.

If ramping is not achieved after a maximum of 1 second, the Incomplete Ramp alarm (5 flashes on red LED) will be triggered and the RSBT will enter into a recovery mode for 5mins. If, at the second consecutive attempt the RSB..HP raises again the Incompete Ramp alarm, then a manual user intervention to reset power on the RSBT shall be required, as this might indicate a real locked rotor condition.

Alarm LED Indications (Red LED)

Flashes	Description of Fault	Action
2	Wrong Phase Sequence	Physical Change
3	Line Voltage Out of Range	Auto reset with 5 mins recovery
4	Frequency Out of Range	Auto reset with 5 mins recovery
5	Over Current (during RAMPING)	Auto reset with 5 mins recovery
6	Ramp Up Time > 1 sec	Auto reset with 5 mins recovery
7	Over Temperature	Auto reset with 5 mins recovery
8	Over Current (during BYPASS)	Auto reset with 5 mins recovery
9	Supply Voltage Unbalance	Auto reset with 5mins recovery assuming all phases (L1, L2, L3) are connected
Fully ON	Internal Fault	Reset power (L1,L2,L3). If fault is not cleard upon reset, please contact your Carlo Gavazzi representative. Note: This alarm applies to RSBT…HPV models only)

Specifications are subject to change without notice. Pictures are just an example. For special features and/or customization, please refer to our sales network. 08/11/16

LED and relay status indications

Status	Green LED (Supply)	Red LED (Alarm)	Relay contact position		Relay Contact Position	
			RSBT..V21/V61	RSBT..V21HP./ RSBT..V61HP.	RSBT48 Alarm (11, 12, 14)	RSBT48 Bypass (21, 22, 24)
Idle	ON	OFF	11/14	11/14	11/12	21/22
Ramping	ON	OFF	11/12	11/14	11/12	21/22
Bypass	ON	OFF	11/14	11/14	11/12	21/24
Recovery time between starts	Flashing	OFF	11/14	11/14	11/12	21/22
Alarm	ON	Flashing	11/12	11/12	11/14	21/22

Flashing sequence

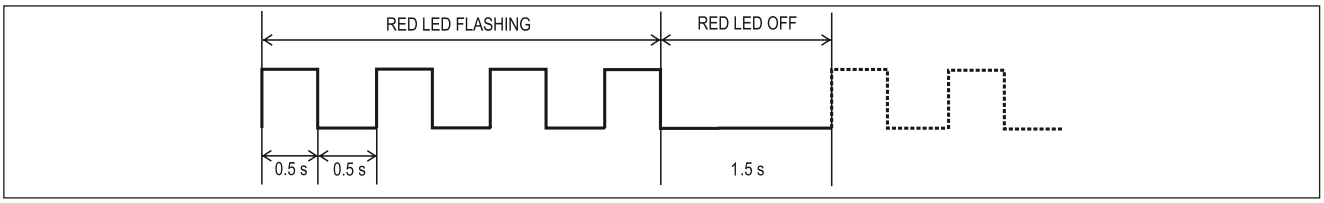

Short Circuit Protection

Protection Co-ordination, Type 1 vs Type 2

Type 1 protection implies that after a short circuit, the device under test will no longer be in a functioning state.
In Type 2 co-ordination the device under test will still be functional after the short circuit. In both cases, however the short circuit has to be interrupted. The fuse between enclosure and supply shall not open. The door or cover of the enclosure shall not be blown open. There shall be no damage to conductors or terminals and the conductors shall not separate from terminals. There shall be no breakage or cracking of insulating bases to the extent that the integrity of the mounting of live parts is impaired. Discharge of parts or any risk of fire shall not occur.
The product variants listed in the table hereunder are suitable for use on a circuit capable of delivering not more than 5,000Arms (or 10,000Arms for RSBT..55 - RSBT..95) Symmetrical Amperes, 400Volts (or 480V for RSBT48 models) maximum when protected by fuses.
Tests at 5,000Arms (or 10,000Arms for RSBT..55 - RSBT..95) were performed with Class Class RK5 fuses (or Class J for RSBT..55, RSBT..70), fast acting; please refer to the table below for maximum allowed ampere rating of the fuse. Use fuses only.

Co-ordination Type 1 (UL508)				
	Max. Fuse Size [A]	**Class**	**Current [kA]**	**Max. Voltage [VAC]**
RSBT..16EV5… RSBT..16EV6…	40	RK5	5	400
RSBT..25EV5… RSBT..25EV6…	40	RK5	5	400
RSBT..32EV5… RSBT..32EV6…	40	RK5	5	400
Co-ordination Type 2 (IEC/EN 60947-4-2)				
	Ferraz Shawmut/ MERSEN		**Current [kA]**	**Max. Voltage [VAC]**
RSBT..16EV….	50	6.9xx CP gRC 14.51 50 (xx = 00 or 231)	5	400
RSBT..25EV….	50	6.9xx CP gRC 14.51 50 (xx = 00 or 21)	5	400
RSBT..32EV….	50	6.9xx CP gRC 14.51 50 (xx = 00 or 21)	5	400

	RSB.4855CV.	**RSB.4870CV.**	**RSB.4895CV.**
Type of coordination: 1 Rated short circuit current	10 kA when protected with J class fuses up to 60A	10 kA when protected with J class fuses up to 70A	10 kA when protected with RK5 fuses up to 100A
Type of coordination: 2 Rated short circuit current	10 kA when protected by semiconductor fuses 100A class URD.Art. no. 6.900CP URD22 x 58 / 100	10 kA when protected by semiconductor fuses 100A, classURD.Art. no. 6.900CP URD22 x 58 / 100	10 kA when protected by semiconductor fuses 160A, ClassURS/URQ, Art.No. 160Ac660VAC 27 x 601/ 6.9xxCPURQ 27 x 60 / 160

Current / Power Ratings

Assigned compressor rating @ 40ºC UL rating @ 40ºC	220 - 240 VAC	380 - 415 VAC	440 - 480 VAC	Max. Current limit level Irms
RSBT2216EV....	4 kW (5 HP)	-	-	40 Arms
RSBT2225EV....	5.5 kW (7.5 HP)	-	-	90 Arms
RSBT2232EV....	9 kW (10 HP)	-	-	110 Arms
RSBT4016EV....	-	7.5 kW (7.5 HP)	-	40 Arms
RSBT4025EV....	-	11 kW (10 HP)	-	90 Arms
RSBT4032EV....	-	15 kW (15 HP)	-	110 Arms
RSBT4855CV.	15 kW (20 HP)	22 kW (30 HP)	30 kW (40 HP)	192.5 Arms
RSBT4870CV.	20 kW (25 HP)	30 kW (40 HP)	37 kW (50 HP)	245.0 Arms
RSBT4895CV.	22 kW (30 HP)	45 kW (60 HP)	55 kW (75 HP)	332.5 Arms

Note: Motor kW ratings are provided as a reference. User shall always ensure that compressor operational current and overload current of the compressor during starting does not exceed the rating of the softstarter being used.

Accessories

Auxiliary Output Module

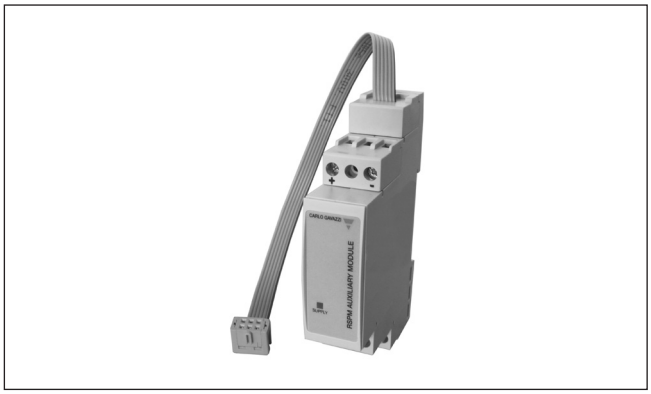

- **17.5mm DIN rail housing**
- **LED indication for supply ON**
- **Plug'n'play design**
- **Output (1):100mA, Open collector, Normally Open (NO)**
  Output (2): 3A SPDT relay *
- **RoHs compliant**
- **Ordering code: RSPMV110 (1-output) / RSPMV120 (2-output)**
- **CE, cULus (Accessory of listed RSBT)**

Auxiliary Relay Alarm Output



- **Normally open (NO) or Normally Closed (NC) configuration**
- **Contact rating: 3A, 250 VAC / 3A, 30VDC**
- **1-Relay Output for alarms generated by softstarter**
- **Ordering code: RFPMV00**
- **UL, cUL Listed (Accessory of Listed RSBT)**

Specifications are subject to change without notice. Pictures are just an example. For special features and/or customization, please refer to our sales network. 08/11/16

EMC/ RFI Filter



- **Insertion loss 5dB**
- **Lightweight and compact design**
- **Operational current: Max. 32A @ 60°C**
- **Rated operational voltage: 220/ 440 VAC ± 15%**
- **Ordering code: RFILT4032V00**
- **UL, cUL Listed (Accessory of Listed RSBT)**

RTPM (Interconnecting Clip)

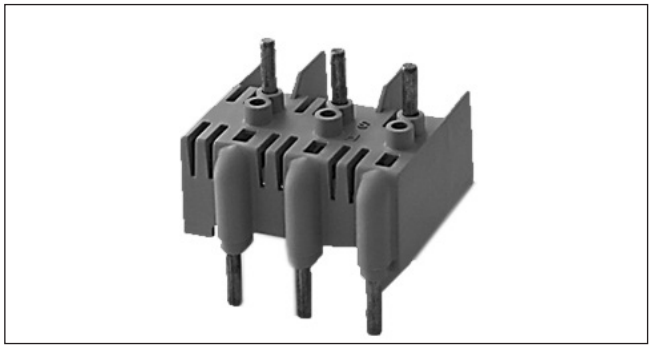

Ordering Key

Interconnecting clip for GMS-32-H motor starter — **RTPMGMS32HL**

• Qty: 10pcs per bag

Interconnecting clip for GMS-32-S motor starter — **RTPMGMS32SL**

• Qty: 10pcs per bag

CARLO GAVAZZI

Variable List

	Read	Write	Monitor	Description	Scaling Factor
Device Properties					
Device address	Yes	Yes	Yes	Set/read the device address	No
Baud rate	Yes	Yes	Yes	Set/read the device baud rate (4800, 9600, 19200, 38400)	No
Parity	Yes	Yes	Yes	Set/read the device parity (No, Even, Odd)	No
Inputs					
Control input status – MODBUS	Yes	No	Yes	Status of control input - MODBUS	No
Control input status – A1,A2	Yes	No	Yes	Status of control input – A1,A2 terminals	No
Control Mode	Yes	Yes	Yes	Set/read the control mode setting - either via MODBUS or via A1,A2 terminals	No
Start/stop command	Yes	Yes	Yes	Set/read the status of start and stop command	No
Soft reset	No	Yes	Yes	Reset alarms	No
Refresh interval	Yes	Yes	Yes	Set/read the refresh interval for the start/stop command	No
"Heartbeat" signal (Refresh Signal)	No	Yes	Yes	Signal to be sent within refresh interval to keep softstarter ON (if 'heartbeat' signal option is enabled)	No
"Heartbeat" signal Enable/Disable	Yes	Yes	Yes	Enables/disables the "heartbeat" signal requirement. If enabled, the device will wait for a refresh start/stop signal within the refresh interval (as set by the user)	No
Delays					
Minimum stop to start delay	Yes	Yes	Yes	Set/read the minimum time between stop to start in secs	No
Minimum start to start delay	Yes	Yes	Yes	Set/read the minimum time between start in secs	No
Time from last start	Yes	No	Yes	Read the time elapsed from the last start in secs	No
Protection settings					
Supply voltage unbalance	Yes	Yes	Yes	Set/read the supply voltage unbalance setting (%)	[x10]
Over voltage alarm	Yes	Yes	Yes	Set/read the over-voltage alarm setting (VAC)	[x10]
Under voltage alarm	Yes	Yes	Yes	Set/read the under-voltage alarm setting (VAC)	[x10]
IMin bypass	Yes	No	Yes	Read the value of the minimum bypass current setting (ARMS)	[x10]
IMAX bypass	Yes	No	Yes	Read the value of the maximum bypass current setting (ARMS)	[x10]
IMAX	Yes	Yes	Yes	Set/read the setting of the maximum current limit (ARMS)	[x10]
Auto-adapt	Yes	Yes	Yes	Set/read the status of the auto-adapt function	No
Counters					
Number of ramps	Yes	No	Yes	Counter for the number of starts performed	No
Over-flow counter for number of ramps	Yes	No	Yes	If the number of starts is >65535 the Number of ramps counter will be full, hence this counter will start incrementing. The value read in this counter has to be multiplied by 65535 and the results is decremented by 1 and added to the value read from Number of ramps counter.	
Instantaneous variables					
VL1-L3	Yes	No	Yes	Line voltage across L1-L3 (VAC)	[x10]
VL2-L3	Yes	No	Yes	Line voltage across L2-L3 (VAC)	[x10]
VL1-L2	Yes	No	Yes	Line voltage across L1-L2 (VAC)	[x10]
VT1-T3	Yes	No	Yes	Line voltage across T1-T3 (VAC)	[x10]
VT2-T3	Yes	No	Yes	Line voltage across T2-T3 (VAC)	[x10]
VT1-T2	Yes	No	Yes	Line voltage across T1-T2 (VAC)	[x10]
AL1	Yes	No	Yes	Current across L1-T1 (ARMS)	[x10]
AL2	Yes	No	Yes	Current across L2-T2 (ARMS)	[x10]
AL3	Yes	No	Yes	Current across L3-T3 (ARMS)	[x10]
WTotal	Yes	No	Yes	Total instantaneous power (Watts)	No
VATotal	Yes	No	Yes	Total instantaneous apparent power (VA)	No
PFTotal	Yes	No	Yes	Power factor	[x100]
Hz	Yes	No	Yes	Supply frequency (Hz)	[x10]
kWh	Yes	No	Yes	Active energy (kWh)	No
Alarm indication					
Alarm type	Yes	No	Yes	Instantaneous alarm indication	No

Note: For the complete reference of the Modbus register map please visit our website www.gavazziautomation.com/nsc/hq/soft_starters

Specifications are subject to change without notice. Pictures are just an example. For special features and/or customization, please refer to our sales network. 08/11/16