RSGT

Three phase AC motor soft starter



Benefits

- **Easy to use.** RSGT is equipped with a self-learning algorithm that automatically adjusts the start parameters to optimise the motor starts and stops.
- **Fast installation and set-up.** Only 3 settings are required (FLC, ramp-up and ramp-down).
- **Compact dimensions.** 12 - 25 Arms in 45mm wide housing, 32 - 55 Arms in 75mm wide housing, 70 - 90 Arms in 120mm housing.
- **Integrated protection.** Diagnostic functions provide additional protection. RSGT is also equipped with an overload protection (Class 10).
- **Less stresses on motors.** The control on all the 3-phases results in better current reduction and no current imbalance during motor start.
- **Torque control during ramp-down.** Smoother deceleration of the load.
- **Load condition monitoring**. The RSGT is equipped with a Modbus/RTU communication port (2-wire connection).
- **Guided model selection.** Easy to use selection tool to select the appropriate soft starter model depending on the application type.

Description

RSGT is an extremely compact and easy to use 3-phase soft starter for AC induction motors rated up to 90 Arms. The starting parameters can be easily set-up through 3 selector switches.
The integrated motor overload protection (Class 10) and Modbus communication result in a higher installation flexibility.

Applications

RSGT soft starters are the ideal solution for 3-phase fixed speed AC induction motor applications where there is the need to reduce the starting current and/or minimise stresses on the motor during start and stop.
The RSGT offers a number of integrated diagnostic functions that can replace additional components inside the electrical panel.
Typical applications include: compressors, pumps and fans.

Main functions

- Soft starting and soft stopping of AC motors
- Integrated electronic overload protection (Class 10)
- Wrong phase sequence detection
- Torque control during ramp-down
- Top of ramp and alarm relay indication
- Dry run detection for pumps
- Serial communication (Modbus) over RS485

References

Order code

RSGT ☐☐☐ V1 ☐☐☐

Enter the code entering the corresponding option instead of ☐

Code	Option	Description	Notes
R	-		
S	-	Soft starter	
G	-	General purpose	
T	-	Three phase control	
☐	40	220 – 400 VAC +10% -15% operational voltage (Ue)	
	60	220 – 600 VAC +10% -15% operational voltage (Ue)	
☐	12	12 Arms	Rated operational current @ 40 °C
	16	16 Arms	
	25	25 Arms	
	32	32 Arms	
	45	45 Arms	
	55	55 Arms	
	70	70 Arms	
	90	90 Arms	
☐	E0	110 - 400 VAC (+10%, - 15%) control voltage (Uc) Supply voltage: internally supplied	RSGT40 models only
	F0	24 VAC/DC (+10%, - 10%) control voltage (Uc) Supply voltage: internally supplied	
	FF	24 VAC/DC (+10%, - 10%) control/supply voltage Supply voltage: externally supplied	RSGT60 models only
	GG	100 - 240 VAC (+10%, - 15%) control/supply voltage Supply voltage: externally supplied	
V	-		
1	-	With integrated motor overload protection (Class 10)	
☐	0	No PTC	RSGT 45 mm models
	1	With PTC	RSGT 75/120 mm models
☐	-	No fan	RSGT 45 mm models
	0		RSGT 32 Arms models only
	1	With fan	RSGT 45 Arms to RSGT 90 Arms models
☐	-	Without communication	
	C	With Modbus communication	

Selection guide

		Operational voltage: 400 VAC		Operational voltage: 600 VAC	
Rated operational current (Ie)	**Modbus**	**Control voltage 110 - 400 VAC**	**Control voltage 24 VAC / DC**	**Control/supply voltage 100 - 240 VAC**	**Control/supply voltage 24 VAC / DC**
12 Arms	No	RSGT4012E0V10	RSGT4012F0V10	RSGT6012GGV10	RSGT6012FFV10
16 Arms		RSGT4016E0V10	RSGT4016F0V10	RSGT6016GGV10	RSGT6016FFV10
25 Arms		RSGT4025E0V10	RSGT4025F0V10	RSGT6025GGV10	RSGT6025FFV10
12 Arms	Yes	RSGT4012E0V10C	RSGT4012F0V10C	RSGT6012GGV10C	RSGT6012FFV10C
16 Arms		RSGT4016E0V10C	RSGT4016F0V10C	RSGT6016GGV10C	RSGT6016FFV10C
25 Arms		RSGT4025E0V10C	RSGT4025F0V10C	RSGT6025GGV10C	RSGT6025FFV10C
32 Arms		RSGT4032E0V110C	RSGT4032F0V110C	RSGT6032GGV110C	RSGT6032FFV110C
45 Arms		RSGT4045E0V111C	RSGT4045F0V111C	RSGT6045GGV111C	RSGT6045FFV111C
55 Arms		RSGT4055E0V111C	RSGT4055F0V111C	RSGT6055GGV111C	RSGT6055FFV111C
70 Arms		RSGT4070E0V111C	RSGT4070F0V111C	RSGT6070GGV111C	RSGT6070FFV111C
90 Arms		RSGT4090E0V111C	RSGT4090F0V111C	RSGT6090GGV111C	RSGT6090FFV111C

Further reading

Information	Where to find it	QR
RSGT 45 mm instruction manual	http://cga.pub/?6ca01b	
RSGT 75/120 mm instruction manual	http://cga.pub/?974b29	
RSGT troubleshooting guide	http://cga.pub/?11a31f	
RSGT 45mm Monitor software	http://cga.pub/?afe4f5	
CAD drawings (RSGT 45 mm)	http://cga.pub/?bf3bed	
CAD drawings (RSGT 75 mm)	http://cga.pub/?ee18e7	
CAD drawings (RSGT 120 mm)	http://cga.pub/?420858	
Modbus communication protocol	http://cga.pub/?8a5887	

Selection guide and typical application settings

Category	Type	Trip Class	Ramp-up setting [s]	Ramp-down setting [s]
Compressors	Scroll compressor	5	1	0
	Screw compressor	5	2 to 5	0
	Piston compressor	5	2	0
	Centrifugal compressor	10	10	0
Pumps	Hydraulic pump	5	2	0
	Centrifugal pump (start time <10sec)	5	5 to 10	10
	Centrifugal pump (start time >10sec)	10	10 to 20	15
	Piston pump	10	5 to 10	0
Fans	Centrifugal fan (<0.5m diameter)	10	5 to 10	0
	Centrifugal fan (>0.5m diameter)	20	15 to 20	0
	Vacuum blowers	10	5 to 10	0
Feeders	Screw feeder	10	2 to 10	0
	Auger	10	5 to 10	0
Rotating machinery	Agitators	10	5 to 15	0
	Mixers	10	5 to 10	0
	Saws (<0.5 m diameter)	10	5 to 10	5
	Saws (>0.5 m diameter)	20	15 to 20	10
	Grinder	20	15 to 20	0
	Crusher	30	20	0
	Conveyors	10	5 to 10	5

Note: when using the RSGT on high inertia loads (Trip Class 20, 30) ensure that enough time is left between starts to allow the RSGT to cool down.

For Trip Class 20 and Class 30 applications we recommend the use of an external overload protection due to the higher FLC setting that is required on RSGT. The FLC setting for Class 20 and Class 30 applications needs to be set to a higher value with respect to the motor FLC in order not to trip the electronic motor overload protection available on the RSGT soft starters.

Selection guide (220 - 400 VAC)

Motor FLC [A]	Motor HP ratings		Motor kW ratings		Trip class 5	Trip class 10	Trip class 20	Trip Class 30
	@ 230 V	@ 400 V	@ 230 V	@ 400 V				
1.8	⅓	1	0.25	0.75	RSGT4012..	RSGT4012..	RSGT4012..	RSGT4012..
2.6	½	1.5	0.37	1.1	RSGT4012..	RSGT4012..	RSGT4012..	RSGT4012..
3.4	¾	2	0.56	1.5	RSGT4012..	RSGT4012..	RSGT4012..	RSGT4012..
5	1.5	3	1.1	2.2	RSGT4012..	RSGT4012..	RSGT4012..	RSGT4012..
6	1.5	4	1.1	3	RSGT4012..	RSGT4012..	RSGT4012..	RSGT4012..
9	2	5.5	1.5	4	RSGT4012..	RSGT4012..	RSGT4016..	RSGT4025..
12	4	7.5	3	5.5	RSGT4012..	RSGT4012..	RSGT4025..	RSGT4025..
16	5.5	10	4	7.5	RSGT4016..	RSGT4016..	RSGT4032..	RSGT4045..
22	7.5	15	5.5	11	RSGT4025..	RSGT4025..	RSGT4045..	RSGT4045..
30	10	20	7.5	15	RSGT4032..	RSGT4032..	RSGT4055..	RSGT4070..
37	10	25	7.5	18	RSGT4045..	RSGT4045..	RSGT4090..	RSGT4090..
45	15	30	11	22	RSGT4045..	RSGT4045..	RSGT4090..	RSGT4090..
55	20	40	15	30	RSGT4055..	RSGT4055..	RSGT4090..	RSGT4090..
70	25	50	18	37	RSGT4070..	RSGT4070..	- *	- *
85	30	60	22	45	RSGT4090..	RSGT4090..	- *	- *

- * Contact Carlo Gavazzi representative for further information.
- Option “E0”: 110 - 400 VAC or option “F0”: 24 VAC/DC.

Selection guide (480 - 600 VAC)

Motor FLC [A]	Motor HP ratings		Motor kW ratings		Trip class 5	Trip class 10	Trip class 20	Trip class 30
	@ 480V	@ 600V	@ 480V	@ 600V				
1.6	¾	1	0.56	0.75	RSGT6012..	RSGT6012..	RSGT6012..	RSGT6012..
2.4	1	1.5	0.75	1.1	RSGT6012..	RSGT6012..	RSGT6012..	RSGT6012..
3	1.5	2	1.1	1.5	RSGT6012..	RSGT6012..	RSGT6012..	RSGT6012..
3.9	2	3	1.5	2.2	RSGT6012..	RSGT6012..	RSGT6012..	RSGT6012..
5	3	4	2.2	3	RSGT6012..	RSGT6012..	RSGT6012..	RSGT6012..
6	3	5	2.2	3.7	RSGT6012..	RSGT6012..	RSGT6012..	RSGT6012..
9	5	7.5	3.7	5.5	RSGT6012..	RSGT6012..	RSGT6012..	RSGT6012..
11	7.5	10	5.5	7.5	RSGT6012..	RSGT6012..	RSGT6016..	RSGT6025..
16	10	15	7.5	11	RSGT6016..	RSGT6016..	RSGT6032..	RSGT6032..
22	15	20	11	15	RSGT6025..	RSGT6025..	RSGT6045..	RSGT6045..
27	20	25	15	18	RSGT6032..	RSGT6032..	RSGT6055..	RSGT6055..
32	20	30	15	22	RSGT6032..	RSGT6032..	RSGT6070..	RSGT6070..
41	30	40	22	30	RSGT6045..	RSGT6045..	RSGT6070..	RSGT6070..
52	40	50	30	37	RSGT6055..	RSGT6055..	RSGT6090..	- *
70	50	60	37	45	RSGT6070..	RSGT6070..	- *	- *
85	60	75	45	55	RSGT6090..	RSGT6090..	- *	- *

- * Contact Carlo Gavazzi representative for further information.
- Option “GG”: 100 - 240 VAC or option “FF”: 24 VAC/DC.

Caution: the actual motor Amps may be higher or lower than the average values listed above. We suggest to use the actual motor current as listed on the motor nameplate. Use this table as a guide only.

Carlo Gavazzi compatible components

Purpose	Component name/code	Notes
PC interface cable (Isolated USB to TTL cable)	RS-USB	For RSGT..12..V10 to RSGT..25..V10
Finger guards	RFCGX6	6 pcs per box
Cooling fan	RFAN-75-40 12 X1	For RSGT 75/120mm models only Rated voltage: 12 VDC Power consumption: 0.6 W

Structure

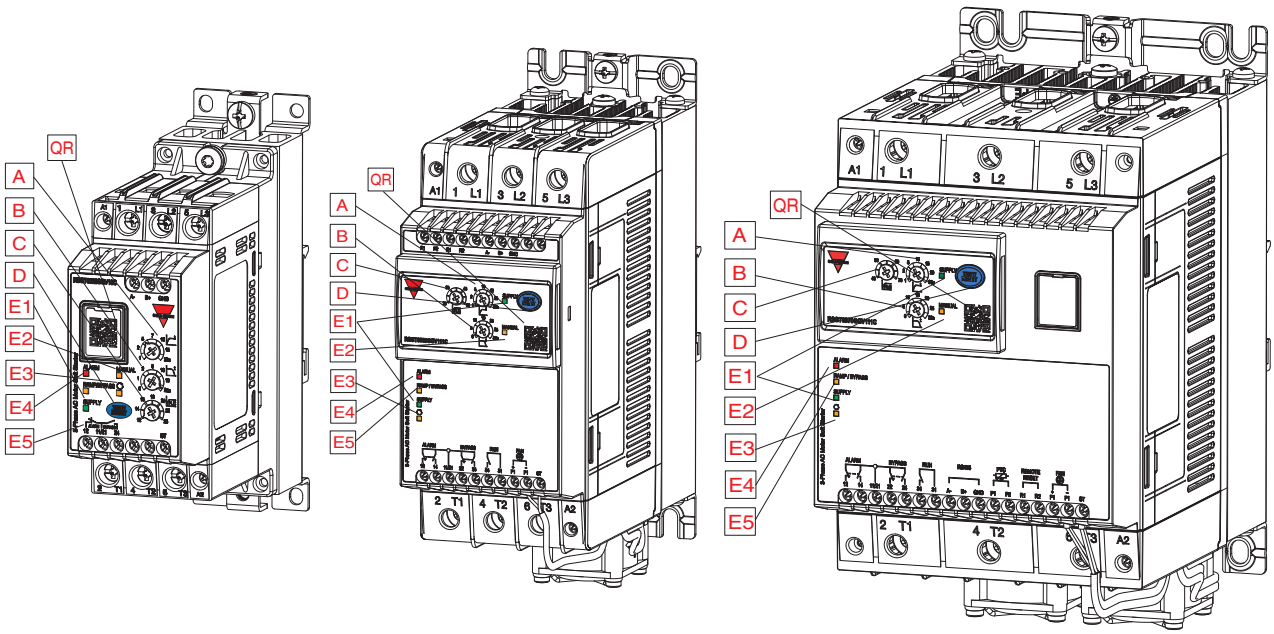

Element	Component	Function
A	Ramp-up time selector	Sets the desired motor starting time.
B	Ramp-down time selector	Sets the desired motor stopping time.
C	FLC selector	Sets the motor full load current (FLC). The FLC setting is used by the RSGT for the overload protection and for the maximum current allowed during motor start.
D	Test/Reset	Simulate overload alarm (press for 1 sec when RSGT is in Idle state) * The alarm recovery mode needs to be set to manual Set Manual/Automatic alarm recovery mode (press for 5 sec when RSGT is in Idle state) Reset alarms (press for <1sec when the RSGT is in alarm mode and alarm recovery mode is manual) Enable/disable phase sequence protection (press for 10 sec when RSGT is in Idle state) Enable/disable dry run function (press for 3 sec when RSGT is in Idle state) Enable/disable overload function (press for 8 sec when RSGT is in Idle state) Note: While the Test/Reset button is pressed the LED E5 will start flashing with a frequency of 1 Hz (1/sec) in order to help the user count the number of seconds elapsed.
E1	LED indicators	Supply. Indicates that the RSGT supply is ON.
E2	LED indicators	Manual. Indicates the alarm reset mode. Manual reset mode - LED ON, Auto reset mode - LED OFF (Factory default setting: Auto, LED OFF)
E3	LED indicators	Phase sequence. Indicates if the wrong phase sequence protection is enabled (LED OFF) or disabled (LED ON). (Factory default setting: Enabled, LED OFF)
E4	LED indicators	Alarm. Indicates that the RSGT is in alarm. The number of flashes indicates the alarm type.
E5	LED indicators	Ramping/bypass. Indicates whether RSGT is in ramping (flashing) or bypass (fully ON). Note: Ramping (no HP): 2 Hz flashing. Ramping (with HP): 10 Hz flashing.
QR	QR code	Scan to link to troubleshooting guide.

Mode of operation

The RSGT series of soft starters works on two distinct self-learning algorithms depending on the ramp-up time settings.

Ramp-up	Mode of operation
1 or 2 seconds	• When the ramp-up selector is in position 1 or 2, the RSGT will follow a self-learning current limit algorithm. • As soon as A1-A2 (or ST for RSGT60 models) control voltage signal is applied, the RSGT will start to ramp-up the motor. • At the very first start the current limit will be 4 x FLC setting. • In the subsequent starts, the RSGT will automatically adjust the current limit setting to maintain the motor start time as close as possible to the ramp-up time setting.
≥ 5 seconds	• When the ramp-up selector is in position 5 or above, the RSGT will follow a self-learning current ramp algorithm. • The RSGT will start with a set of default parameters for starting torque. • Depending on the ramp-up time setting, the RSGT will apply a current ramp algorithm to start the motor as close as possible to the set ramp-up time. • During the motor start, the current will be limited to a maximum of 3.5 x FLC setting. • In the subsequent starts, the RSGT will continue to adjust the starting parameters of initial torque and current ramp to ensure that the motor is started as close as possible to the set ramp-up time.
HP mode of operation	• During the ramp-up sequence, the RSGT will check if the motor is rotating. • If the RSGT detects that the motor is in locked rotor condition as soon as control is applied and/or the motor has not reached full speed at the set ramp-up time, it will trigger the HP function. • This mode of operation is indicated via a faster flashing sequence on the ramping/bypass LED (E5). • The maximum starting current during HP mode can reach: 4 x Ie for ramp-up setting of 1 or 2 seconds and 3.5 x Ie for ramp-up setting ≥ 5 seconds. • The RSGT will then go in bypass state as soon as it detects that the motor reached full speed.

Ramp-down	Mode of operation
1 to 20 seconds (for RSGT 45mm) **1 to 30 seconds (for RSGT 75/120mm)**	• During ramp-down, the RSGT works on a torque control algorithm for smoother stopping of the motor. • As soon as the control voltage signal A1-A2 (or ST for RSGT 60 models) is removed, the RSGT will slow down the motor gradually according to the ramp-down setting. • The power semiconductors will be switched OFF as soon as the time (as per ramp-down setting) has elapsed unless there is a risk of exceeding the maximum temperature on the semiconductors. In such a case the RSGT will leave the motor to coast to stop.
0 seconds	• If the ramp-down selector is set to 0, the RSGT will leave the motor to coast to stop (no ramp-down).

Settings

	RSGT 45mm	RSGT 75mm	RSGT 120mm
Ramp-up time	1 - 20 s	1 - 30 s	1 - 30 s
Ramp-down time	0 - 20 s	0 - 30 s	0 - 30 s
Initial torque	Automatically determined by RSGT		
FLC range settings	RSGT 12: 2 - 12 A RSGT 16: 6 - 16 A RSGT 25: 12 - 25 A	RSGT 32: 20 - 32 A RSGT 45: 32 - 45 A RSGT 55: 25 - 55 A	RSGT 70: 40 - 70 A RSGT 90: 60 - 90 A

Features

General

	RSGT 45 mm	RSGT 75 mm	RSGT 120 mm
Material	PA66		
Assembly	DIN or panel		
Protection grade	IP20		
Weight	0.5 to 0.75 kg	2.3 kg (approx.)	3.5 kg (approx.)
Overvoltage category	Cat. III		

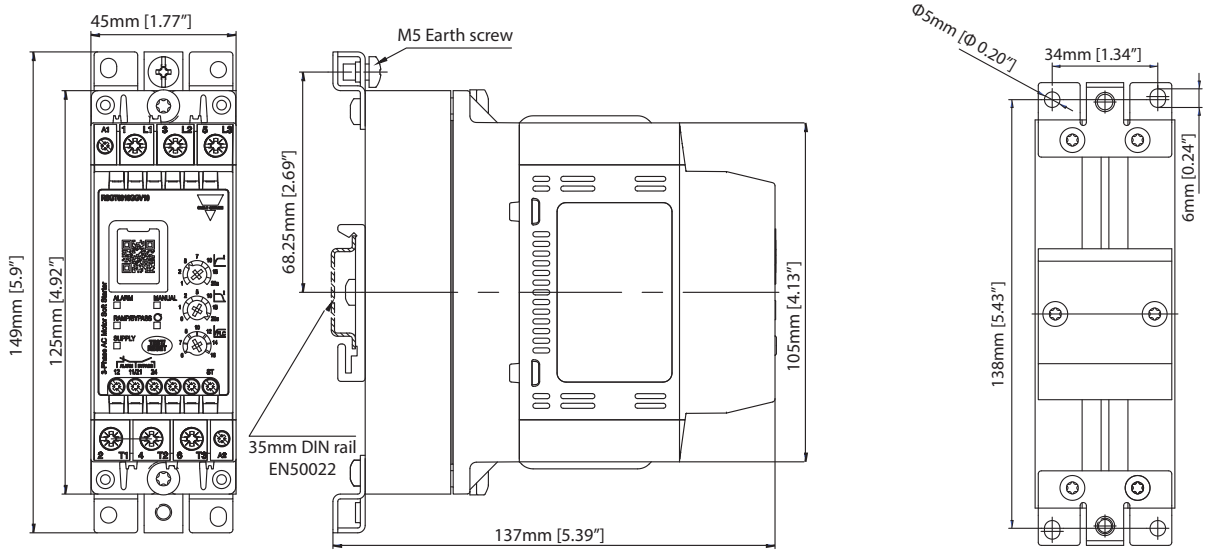

Fig. 1 *RSGT 45mm: RSGT..12..to RSGT..16..*

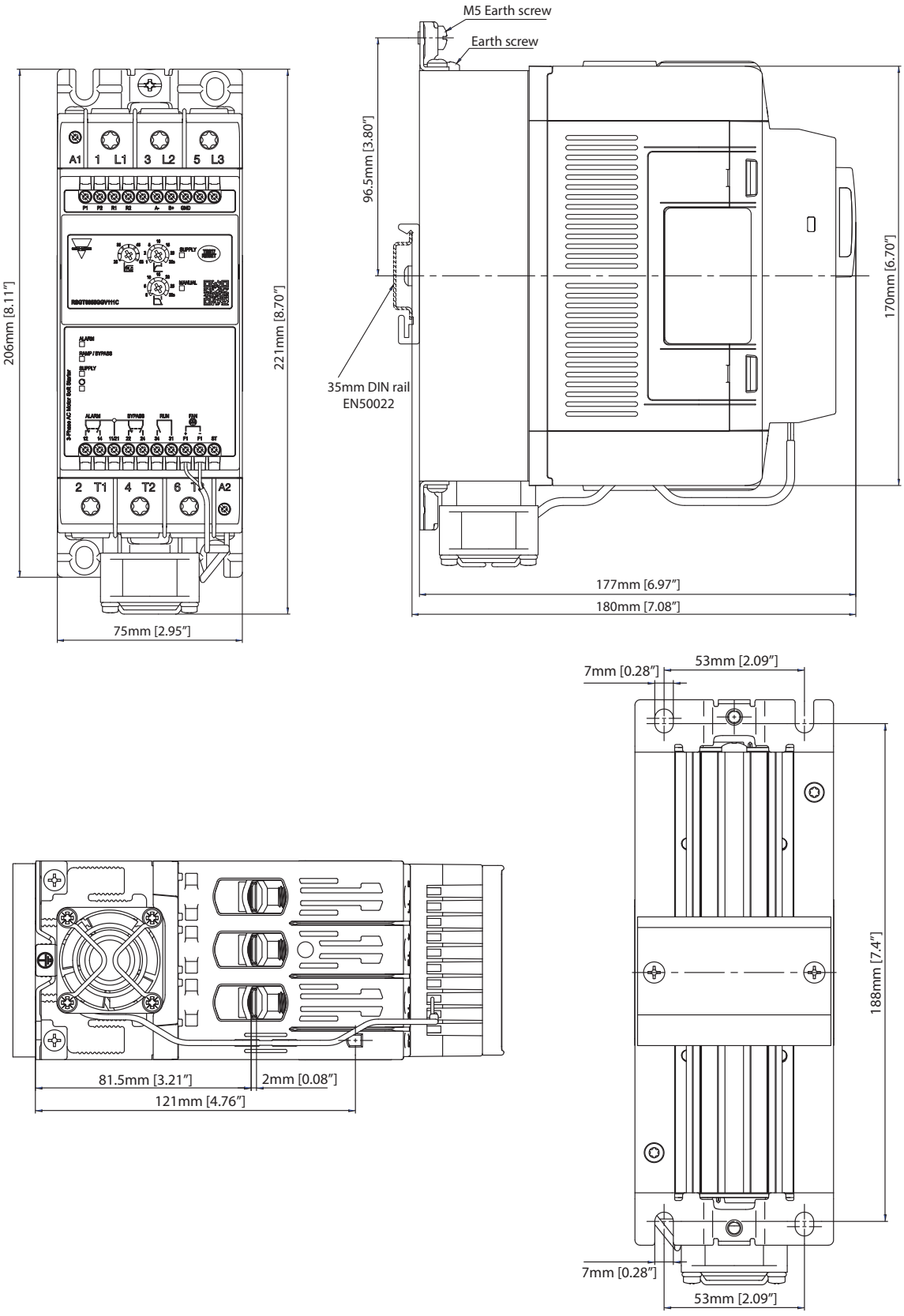

Fig. 2 *RSGT 75mm: RSGT..32.. to RSGT..55*

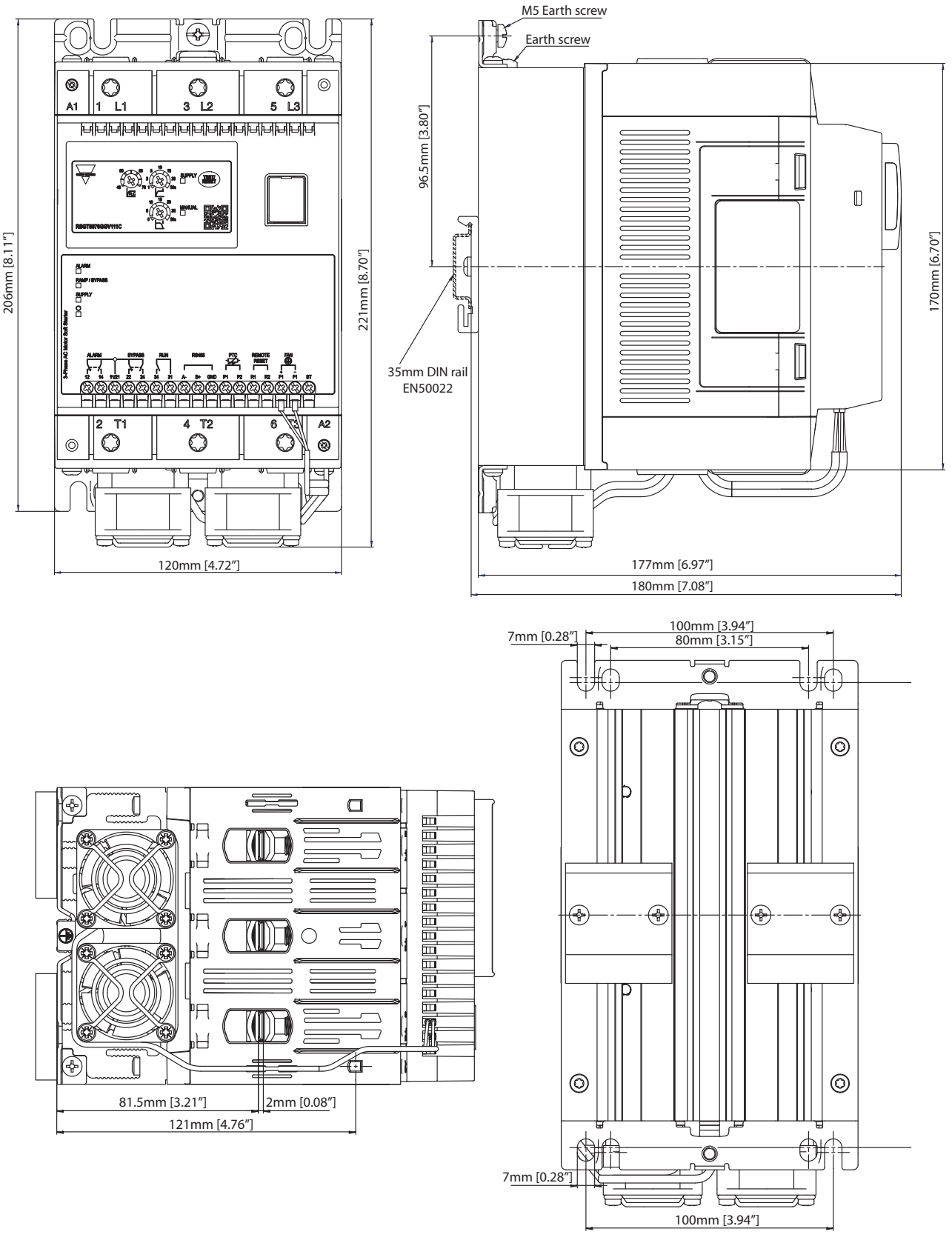

Fig. 3 *RSGT 120mm: RSGT..70.. to RSGT..90*

Power Supply

	RSGT40	RSGT60
Operational voltage range	187 - 440 VACrms	187 - 660 VACrms
Supply current at Idle	< 30 mArms	
Blocking voltage	1200 Vp	1600 Vp
Rated AC frequency	50/60 Hz (+/- 10%)	
Rated insulation voltage	600 VAC	690 VAC
Dielectric withstand voltage: **Supply to input** **Supply to heatsink**	 2.5 kVrms 2.5 kVrms	
Integrated varistor	Yes	

Inputs

	RSGT40..E0V	RSGT40..F0V	RSGT60..FFV	RSGT60..GGV
Control voltage (Uc)	A1 - A2: 110 - 400 VAC +10%, -15%	A1 - A2: 24 VAC/VDC +10%, -10%	ST: 24 VAC/VDC +10%, -15%	ST: 100 - 240 VAC +10%, -15%
Control voltage range (Uc)	93.5 - 440 VAC	21.6 - 26.4 VAC/DC	21.6 - 26.4 VAC/DC	85 - 264 VAC
Maximum pick-up voltage	80 VAC	20.4 VAC/DC	20.4 VAC/DC	80 VAC
Minimum drop out voltage	20 VAC	5 VAC/DC	5 VAC/DC	20 VAC
Supply voltage range (Us)	-	-	A1 - A2: 24 VAC/DC +10%, -10%	A1 - A2: 100 - 240 VAC +10%, -15%
Rated AC frequency	45 - 66 Hz	45 - 66 Hz (applies to 24 VAC supply)		45 - 66 Hz
Rated insulation voltage (Ui)	500 VAC			
Dielectric strength: **Dielectric withstand voltage** **Rated impulse withstand voltage**	 2 kVrms 4 kVrms			
Control input current	0.55 - 1.3 mArms	0.4 - 1 mArms	0.5 - 1.5 mArms	0.4 - 3 mArms
Input to output response time (Mains supply already present)	200 ms			
Input to output response time (Mains supply applied with control)	2 sec		3 sec	
Integrated varistor	Yes			

Note 1: for the Canadian application, the control terminals A1, A2 (or A1, A2, ST for RSGT60 versions) of the RSGT devices shall be supplied by a secondary circuit where power is limited by a transformer, rectifier, voltage divider, or similar device that derives power from a primary circuit, and where the short-circuit limit between conductors of the secondary circuit or between conductors and ground is 1500VA or less. The short-circuit volt ampere limit is the product of the open circuit voltage and the short circuit ampere.

Note 2: RSGT60GG soft starters require a separate 100 - 240V, 50/60 Hz single phase control source,while RSGT60FF requires 21.6 - 26.4 VAC/DC. Output connections (L1, L2, L3, T1, T2, T3) are not galvanically isolated from the external supply connections (A1, A2, ST).

Outputs

	RSGT..12	RSGT..16	RSGT..25
Overload cycle @ 40°C surrounding temperature (acc. to EN/IEC 60947-4-2)	AC53b: 3 - 12 : 288		
Maximum number of starts/hr @ rated overload cycle @ 40°C surrounding temperature	12		
Rated operational current @ 40°C	12 Arms	16 Arms	25 Arms
Rated operational current @ 50°C	12 Arms	15 Arms	23 Arms
Rated operational current @ 60°C	12 Arms	13 Arms	21 Arms
Minimum load current	1 Arms		

	RSGT..32	RSGT..45	RSGT..55
Overload cycle @ 40°C surrounding temperature (acc. to EN/IEC 60947-4-2)	AC53b: 3 - 12 : 288		
Maximum number of starts/hr @ rated overload cycle @ 40°C surrounding temperature	12		
Rated operational current @ 40°C	32 Arms	45 Arms	55 Arms
Rated operational current @ 50°C	29 Arms	41 Arms	50 Arms
Rated operational current @ 60°C	27 Arms	37 Arms	46 Arms
Minimum load current	5 Arms		

	RSGT..70	RSGT..90
Overload cycle @ 40°C surrounding temperature (acc. to EN/IEC 60947-4-2)	AC53b: 3 - 12 : 288	
Maximum number of starts/hr @ rated overload cycle @ 40°C surrounding temperature	12	
Rated operational current @ 40°C	70 Arms	90 Arms
Rated operational current @ 50°C	64 Arms	83 Arms
Rated operational current @ 60°C	59 Arms	76 Arms
Minimum load current	5 Arms	

Note: the overload cycle describes the switching capability of the soft starter at a surrounding temperature of 40°C as described in EN/IEC 60947-4-2. An overload cycle AC53b:3-12:348 means that the soft starter can handle a starting current of 3x Ie for 12 seconds followed by an OFF time of 348 seconds.

Auxiliary relays

	RSGT 45mm	RSGT 75mm	RSGT 120mm
Number of output relays	2	3	
Function of relays	Alarm, Bypassed (top of ramp).	Alarm, Bypassed (top of ramp), Run	
Rated operational voltage	250 VAC/30 VDC		
Rated insulation voltage	250 VAC		
Dielectric withstand voltage	2.5 kV		
Overvoltage category	II		
Type of control circuit	Electromechanical relay		
Number of contacts	Alarm: 1 Bypassed: 1	Alarm: 2 Bypassed: 2 Run: 1	
Type of contacts	Alarm: normally closed (NC) Bypassed: normally open (NO)	Alarm: Changeover (NO, NC) Bypassed: Changeover (NO, NC) Run: Normally open (NO)	
Type of current	AC / DC		
Rated operational current	3 Arms @ 250 VAC, 3 Arms @ 30 VDC		

RS485

Type	Bi-directional (static and dynamic variables and parameters)
Functions	Configuration of device Start/Stop Modification of set-point parameters Monitoring of measured variables
Connection	2-wires Note: to reduce the noise use a shielded cable and connect the shield to GND terminal and to the ground at the same point.
Address	Default : 1 Selectable via software: range 1 - 247
Protocol	MODBUS (RTU)
Factory defined data format	Data bits: 8 Parity: none Stop bit: 1 Selectable via software: parity: none (2 stop bits), odd (1 stop bit), even (1 stop bit)
Baud rate	Default: 9.6k bits/s Selectable via software: 9.6k, 19.2k, 38.4k bits/s

Note: applies to RSGT...V.C models only

Environmental

Working temperature	-20°C to +60°C (-4°F to +140°F). Note: for temperatures > 40°C derating applies.
Storage temperature	-40°C to +80°C (-40°F to +176°F).
Relative humidity	< 95% non-condensing @ 40°C.
Pollution degree	2
Installation category	III
Installation altitude	1000 m
Vibration **Frequency 1** **Frequency 2**	Acc. to IEC/EN 60068-2-6 2 [+3/-0] Hz to 25 Hz displacement +/- 1.6 mm 10 Hz to 55 Hz @ 2g (19.96m/s^2) @ constant displacement

Compatibility and conformity

Approvals	CE cULus LISTED EAC UKCA
Standards compliance	**RSGT 45 mm**
	LVD: EN 60947-4-2:2012 EE: EN 60947-4-2:2012 EMCD: EN 60947-4-2:2012 EMC: EN 60947-4-2:2012 UL: UL 60947-4-2, E172877, NMFT cUL: C22.2 no. CSA C22.2 no. 60947-4-2, E172877, NMFT7
	RSGT 75 mm / RSGT 120 mm
	LVD: EN 60947-4-2:2012 EE: EN 60947-4-2:2012 EMCD: EN 60947-4-2:2012 EMC: EN 60947-4-2:2012 UL: E172877, NMFT, UL508 cUL: C22.2 no. CSA C22.2 no. 14, E172877, NMFT7

Electromagnetic compatibility (EMC) - immunity			
	RSGT 45 mm	**RSGT 75 mm**	**RSGT 120 mm**
Electrostatic discharge (ESD) EN/IEC 61000-4-2 8 kV air discharge, 4 kV contact	PC1	PC2	PC2
Radiated radio frequency EN/IEC 61000-4-3 10 V/m, from 80 MHz to 1 GHz 10 V/m, from 1.4 to 2 GHz 3 V/m, from 2 to 2.7 GHz		 PC1 PC1 PC1	
Electrical fast transient (burst) EN/IEC 61000-4-4 AC input: 2 kV, 5 kHz & 100 kHz DC input: 1 kV, 5 kHz & 100 kHz Signal: 1 kV, 5 kHz & 100 kHz Control: 2 kV, 5 kHz &100 kHz Output: 2 kV, 5 kHz & 100 kHz	 PC1 PC2 PC2 PC2 PC2	 PC2 PC2 PC2 PC2 PC1	 PC2 PC2 PC2 PC2 PC2
Conducted radio frequency EN/IEC 61000-4-6 10 V/m, from 0.15 to 80 MHz		PC2	
Electrical surge, EN/IEC 61000-4-5 Output, line to line: 1 kV Output, line to earth: 2 kV AC input, line to line: 1 kV AC input, line to earth: 2 kV DC input, line to line: 1 kV DC input, line to earth: 2 kV Signal and control, line to earth: 2 kV	 PC2 PC1 PC1 PC1 PC2 PC2 PC1	 PC2 PC2 PC1 PC1 PC2 PC2 1 kV (PC2)	 PC2 PC2 PC1 PC1 PC2 PC2 1 kV (PC2)
Voltage dips, EN/IEC 61000-4-11 0% for 10 ms and 20 ms 40% for 100, 200, 1000 ms 70% for 500 ms 80% for 5000 ms 0% for 5000 ms		 PC2 PC2 PC2 PC2 PC2	

Electromagnetic compatibility (EMC) - emissions	
Radio interference field emission (radiated)	EN/IEC 55011 Class A (Industrial): from 30 to 1000 MHz
Radio interference voltage emissions (conducted)	EN/IEC 55011 Class A (Industrial): from 0.15 to 30 MHz

Performance

Current / power ratings: kW and HP @ 40°C

Model	IEC Rated Current	220 - 240 VAC	380 - 415 VAC	440 - 480 VAC	550 - 600 VAC
RSGT..12	12 Arms	3 kW / 3 HP	5.5 kW / 5 HP	5.5 kW / 7.5 HP	9 kW / 10 HP
RSGT..16	16 Arms	4 kW / 5 HP	7.5 kW / 7.5 HP	9 kW / 10 HP	11 kW / 15 HP
RSGT..25	25 Arms	5.5 kW / 7.5 HP	11 kW / 10 HP	11 kW / 15 HP	20 kW / 20 HP
RSGT..32	32 Arms	9 kW / 10 HP	15 kW / 15 HP	18.5 kW / 20 HP	22 kW/ 30 HP
RSGT..45	45 Arms	11 kW / 15 HP	22 kW/ 25 HP	22 kW/ 30 HP	37 kW/ 40 HP
RSGT..55	55 Arms	15 kW / 20 HP	30 kW / 30 HP	30 kW / 40 HP	45 kW / 50 HP
RSGT..70	70 Arms	20 kW / 25 HP	37 kW / 40 HP	45 kW / 50 HP	55 kW / 60 HP
RSGT..90	90 Arms	22 kW / 30 HP	45 kW / 50 HP	45 kW / 60 HP	55 kW / 75 HP

Ratings:
kW rating according to: IEC/EN 60947-4-2

Starts per hour

The table below indicates the maximum number of starts/hr that can be done by the different RSGT models at different operating currents with a surrounding temperature of 40°C.

Model	Operational current			
	6 Arms	12 Arms	16 Arms	25 Arms
RSGT..12.	26	12	-	-
RSGT..16.	37	17	12	-
RSGT..25.	64	29	21	12

Model	Operational current							
	12 Arms	16 Arms	25 Arms	32 Arms	45 Arms	55 Arms	70 Arms	90 Arms
RSGT..32.	36	26	12	-	-	-	-	-
RSGT..45.	55	40	24	18	12	-	-	-
RSGT..55.	75	54	32	24	16	12	-	-
RSGT..70	90	66	41	31	21	16	12	-
RSGT..90	121	89	55	42	28	22	17	12

Current derating curves

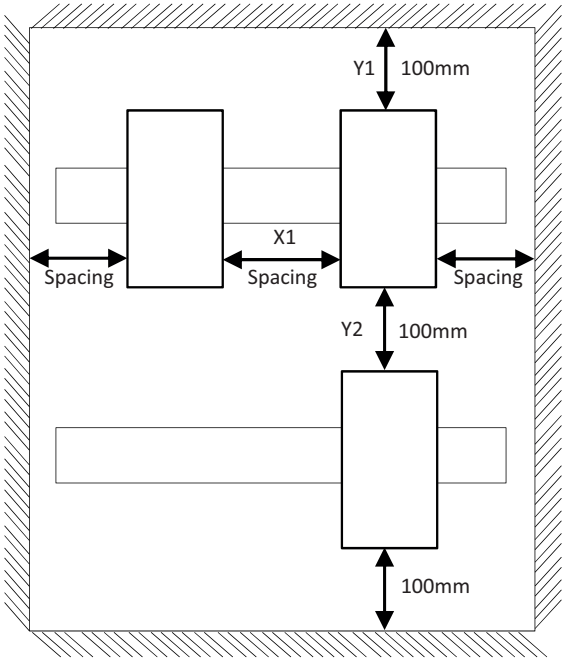

RSGT..12

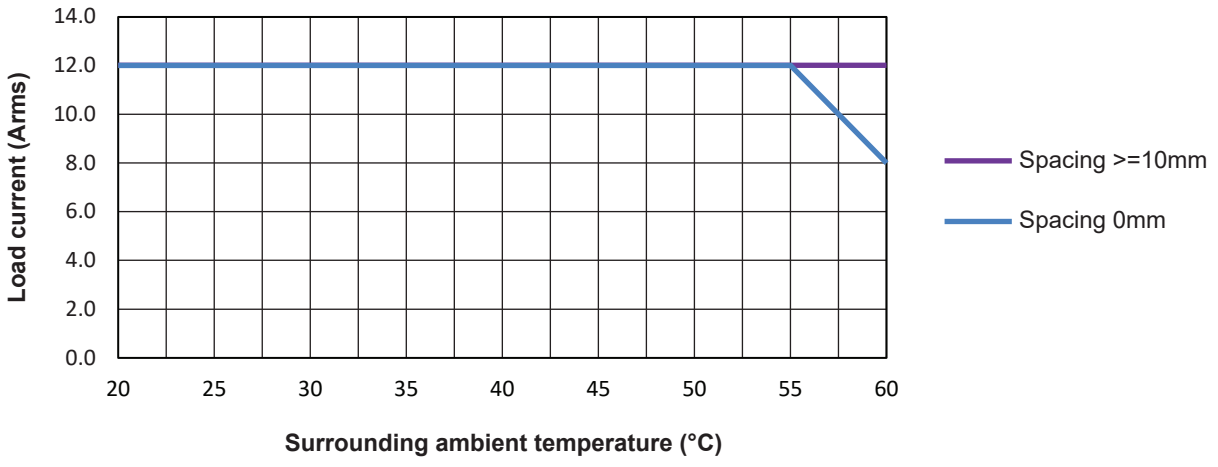

RSGT..16

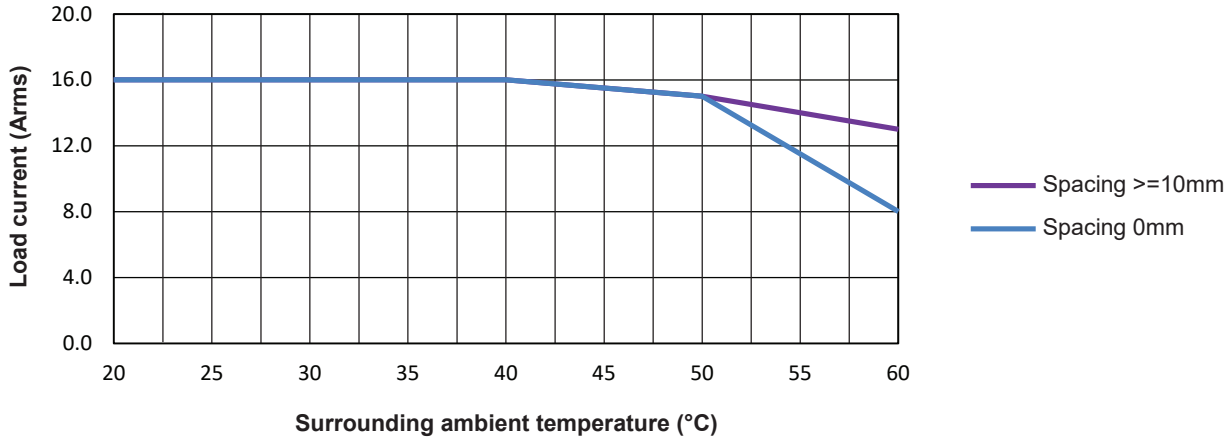

RSGT..25

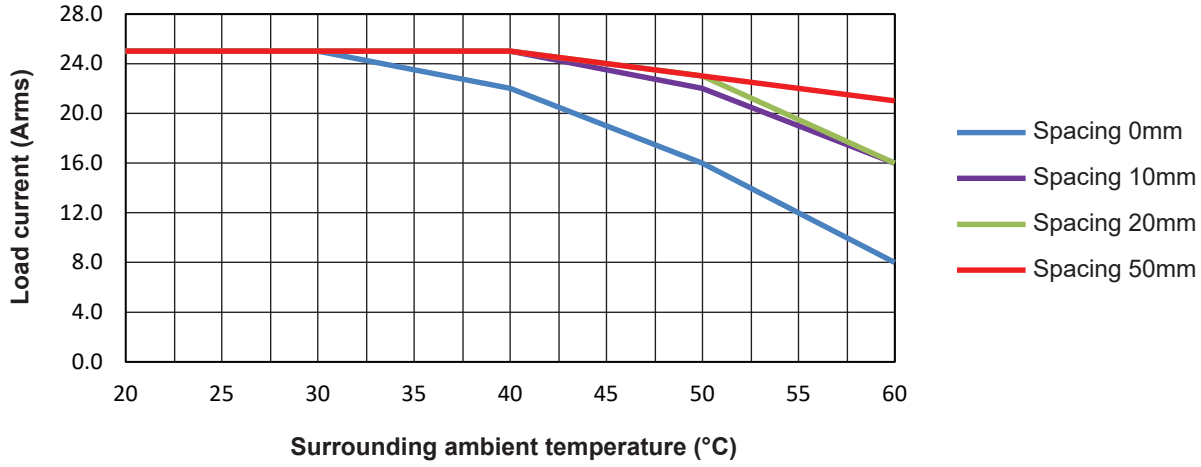

RSGT..32

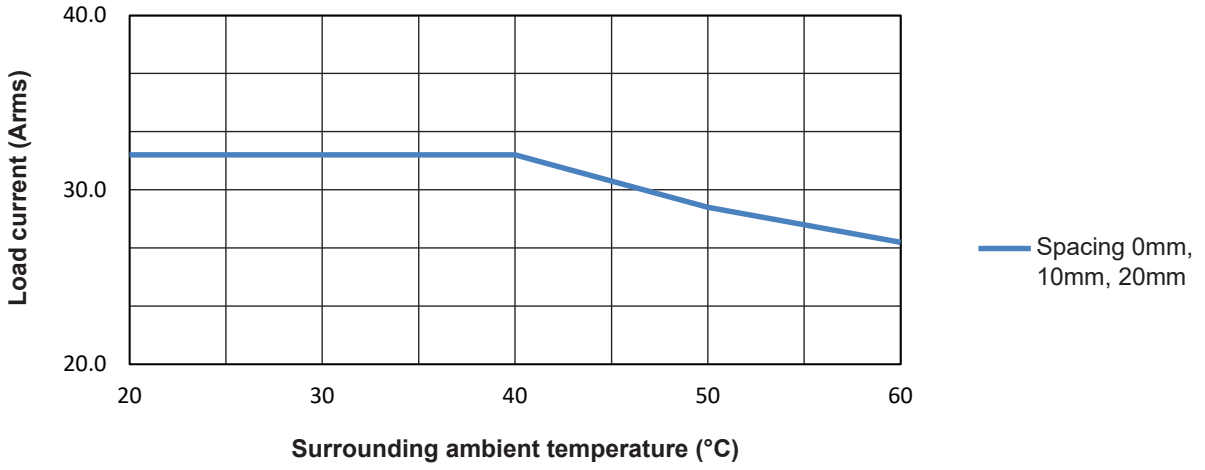

RSGT..45

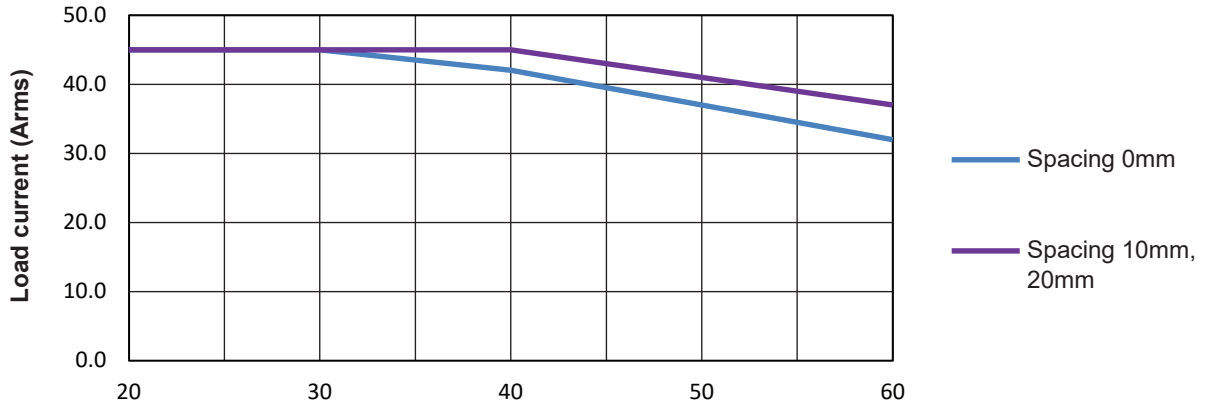

RSGT..55

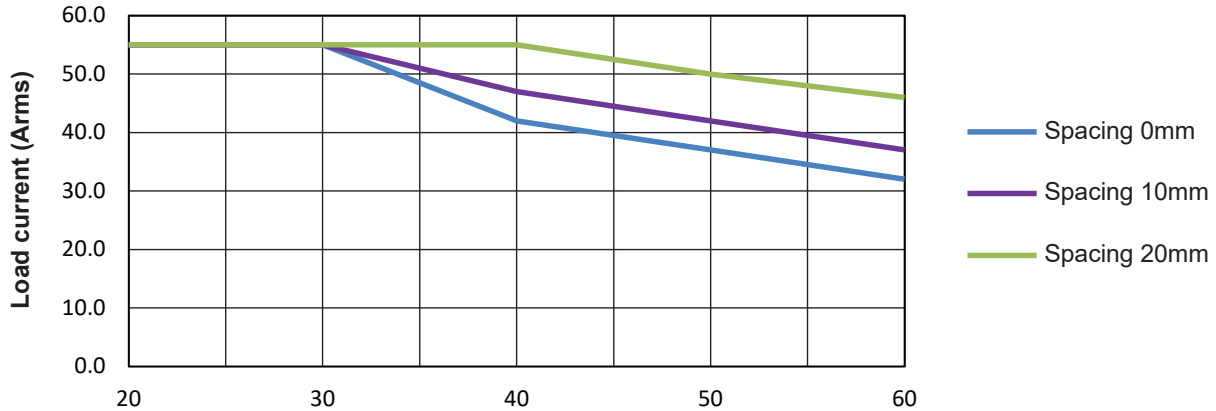

RSGT..70

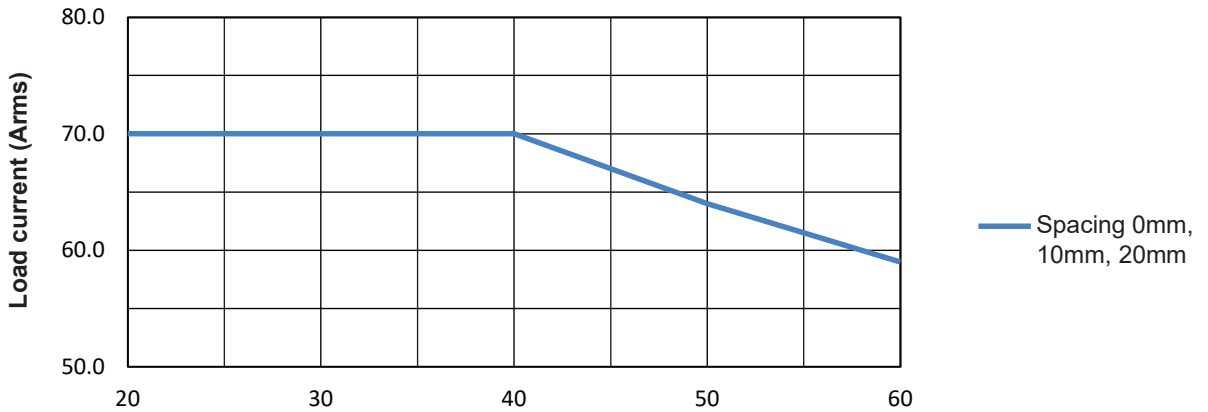

RSGT..90

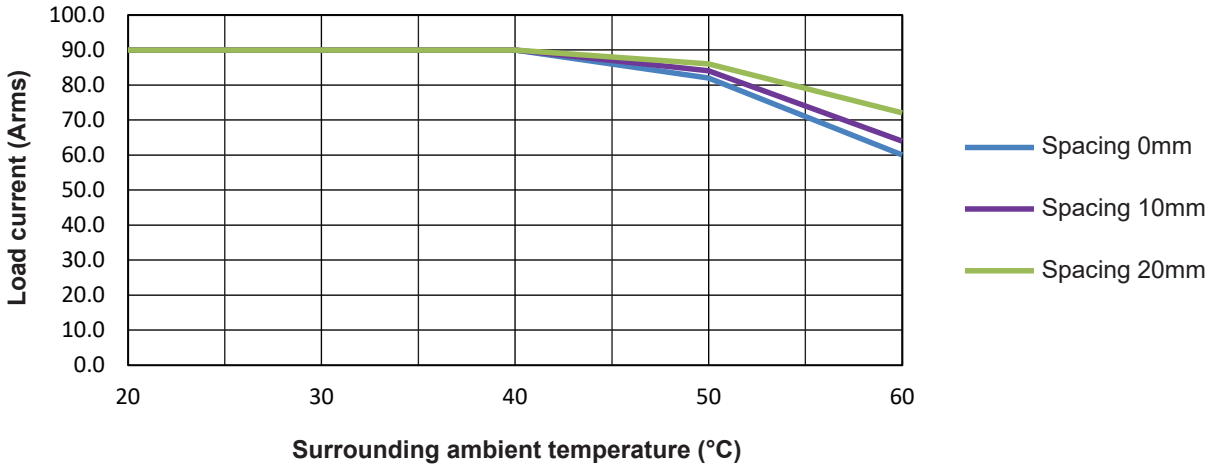
100.0
90.0
80.0
70.0
60.0
50.0
40.0
30.0
20.0
10.0
0.0
Load current (Arms)
20
30
40
50
60
Surrounding ambient temperature (°C)
Spacing 0mm
Spacing 10mm
Spacing 20mm

Connection Diagrams

Terminal markings

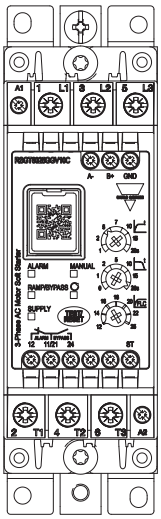

Fig. 4 *RSGT 45mm...*

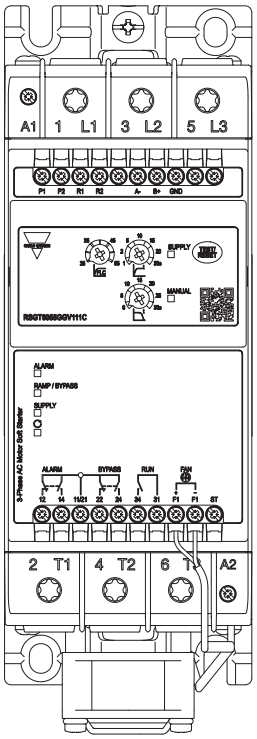

Fig. 5 *RSGT 75mm...*

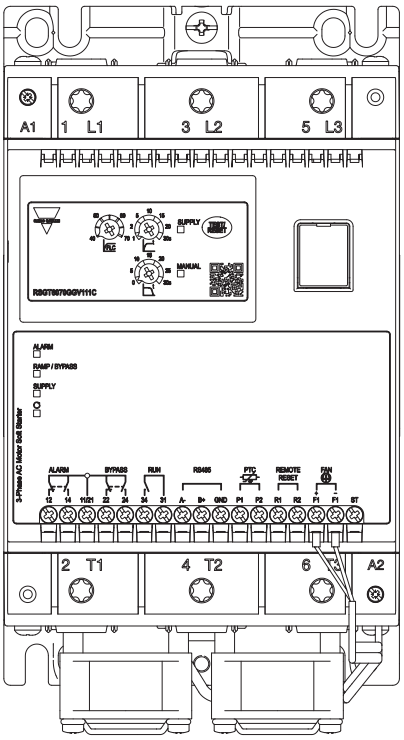

Fig. 6 *RSGT 120mm...*

Marking	RSGT 45 mm		RSGT 75mm		RSGT 120mm	
	RSGT40	RSGT60	RSGT40	RSGT60	RSGT40	RSGT60
1 L1, 3 L2, 5 L3	Line connections					
2 T1, 4 T2, 6 T3	Load connections					
A1, A2	Control voltage	Supply voltage	Control voltage	Supply voltage	Control voltage	Supply voltage
ST	-	Control voltage	-	Control voltage	-	
11, 12	Alarm indication (normally closed, NC)					
21, 22	-		Top of ramp indication (normally closed, NC)			
21, 24	Top of ramp indication (normally open, NO)					
31, 34	-		Run relay (normally open, NO)			
R1, R2	-		Remote reset of alarms			
P1, P2	-		PTC input			
A-, B+, GND	Modbus connections **					
F1+, F1- *	-		Fan connection			
Note:	For the 24 VDC (RSGT40..F0, RSGT60..FF) models: Connect A1 to the positive (+) and A2 to the negative (-) terminal.					

Wiring diagrams

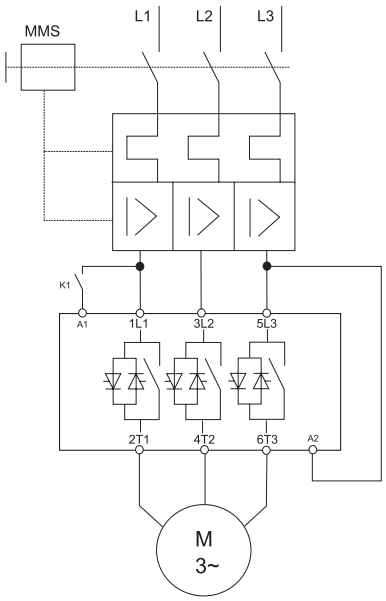

Fig. 7 *RSGT40E0...*

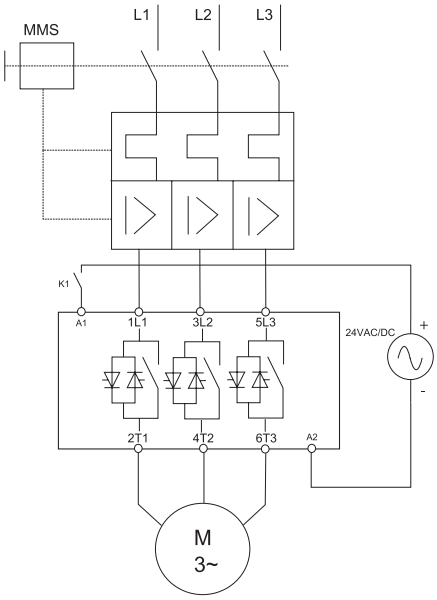

Fig. 8 *RSGT40F0...*

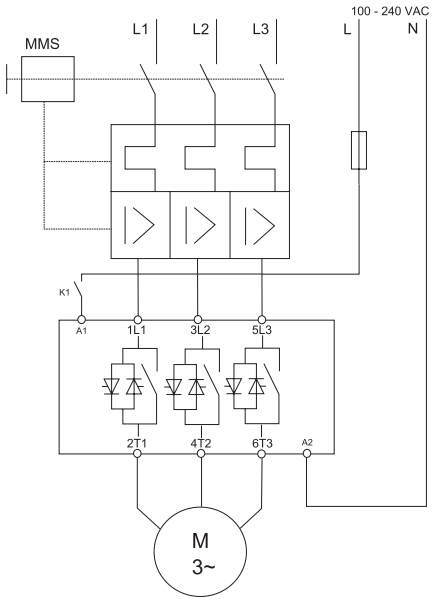

Fig. 9 *RSGT40E0...*

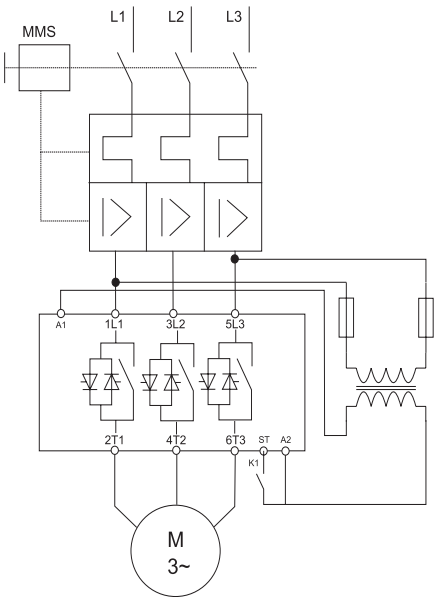

Fig. 10 *RSGT60.*
GG models: Apply 100 - 240VAC,
FF models: Apply 24VAC/DC

*Note : It is recommended that the power factor correction capacitors be switched out of the circuit during the ramp-up phase. When the RSGT is in the bypass state (bypass relays closed), the capacitor may be switched back into the circuit. Capacitors may affect the proper operation of the silicon controlled rectifiers (SCRs) if kept in the circuit during the start ramp.

Connection specifications

Line conductors 1 L1, 3 L2, 5 L3, 2 T1, 4 T2, 6 T3 Acc. to EN60947-1			
	RSGT 45mm	**RSGT 75 mm**	**RSGT 120 mm**
Flexible	2.5 - 10 mm^2 2.5 - 2 x 4 mm^2	-	
Rigid (solid or stranded)	2.5 - 10 mm^2	2 x (10 - 50 $mm^{2)}$	
Flexible with end sleeve (ferrule)	2.5 - 10 mm^2	2 x (10 - 50 $mm^{2)}$	
UL/cUL rated data **Rigid (stranded)** **Rigid (solid)** **Rigid (solid or stranded)**	 AWG 6 -14 AWG 10 -14 2 x (AWG 10 - 14)	 2 x (AWG 8 - 10)	
Terminal screws	M4	M8	
Maximum tightening torque	2.5 Nm (22 lb.in) with pozidriv bit 2	12 Nm (106 lb.in) with Torx TT40 bit	
Stripping length	8.0 mm	20 mm	

Secondary conductors A1, A2 Acc. to EN60998			
	RSGT 45mm	**RSGT 75 mm**	**RSGT 120 mm**
Flexible	0.5 .... 1.5 mm^2		
Rigid (solid or stranded)	0.5 .... 2.5 mm^2		
Flexible with end sleeve (ferrule)	0.5 .... 1.5 mm^2		
UL/cUL rated data **Rigid (solid or stranded)**	AWG 10...18		
Terminal screws	M3		
Maximum tightening torque	0.6 Nm (5.3 lb.in) with pozidriv bit 1		
Stripping length	6.0 mm		

Auxiliary conductors 11, 12, 21, 22, 24, ST, A- , B+, GND, P1, P2, R1, R2, F1+, F1-			
	RSGT 45mm	**RSGT 75 mm**	**RSGT 120 mm**
Rigid (solid or stranded)	0.5 ... 2.5 mm^2		
Flexible with end sleeve (ferrule)	0.05 ... 1.5 mm^2		
UL/cUL rated data **Rigid (solid or stranded)**	AWG 30 … 14		
Terminal screws	M3		
Maximum tightening torque	0.45 Nm (4.0 lb.in) pozidriv bit 1		
Stripping length	6.0 mm		

Use 75ºC Copper (Cu) conductors

Troubleshooting

LED status indications

State	Supply (green LED)	Ramp/Bypass (yellow LED)	Alarm (red LED)	Manual (yellow LED)
Idle	ON	OFF	OFF	OFF/ON
Ramping	ON	Flashing	OFF	OFF/ON
Bypass	ON	ON	OFF	OFF/ON
Alarm (Auto-recovery)	ON	OFF	Flashing	OFF
Alarm (Manual recovery)	ON	OFF	Flashing	ON
Internal fault	ON	OFF	ON	OFF/ON
Idle (Start to start or stop to start time not elapsed)	Flashing	OFF	OFF	OFF/ON

Relay status indication

State	Supply (green LED)	Relay contact position				
		RSGT 45mm		RSGT 75mm, RSGT 120 mm		
		Alarm (11, 12)	Bypass (21, 24)	Alarm (11, 12, 14)	Bypass (21, 22, 24)	Run (31, 34)
Idle	ON	Closed	Open	11, 12	21, 22	Open
Ramping	ON	Closed	Open	11, 12	21, 22	Closed
Bypass	ON	Closed	Closed	11, 12	21, 24	Closed
Alarm (Auto-recovery)	ON	Open	Open	11, 14	21, 22	Open
Alarm (Manual recovery)	ON	Open	Open	11, 14	21, 22	Open
Internal fault	ON	Open	Open	11, 14	21, 22	Open
Idle (Start to start or stop to start time not elapsed)	Flashing	Closed	Open	11, 12	21, 22	Open

Alarms

The RSGT includes a number of diagnostics and protection features each of which is signalled through a flashing sequence on the red LED.

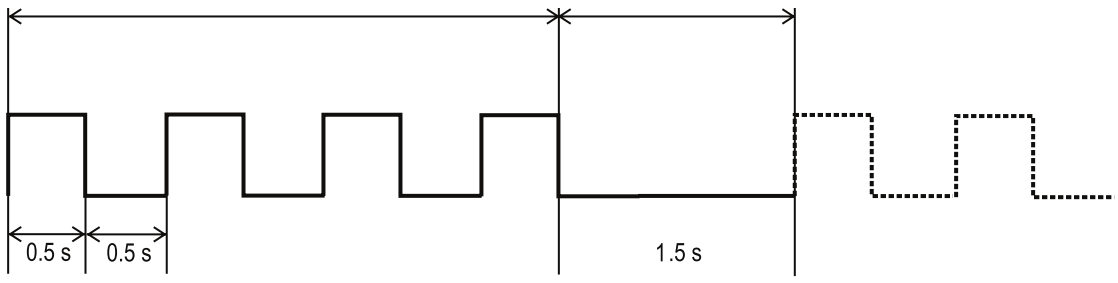

Number of flashes	2
Alarm	Wrong phase sequence
Alarm description	If the connection to the soft starter is not done in the correct sequence (L1, L2, L3), the RSGT will trigger the wrong phase sequence alarm and the motor will not be started.
Alarm recovery period	N/A
Consecutive alarms for hard reset	1
Action to recover alarm	User intervention is required to change the wiring sequence to recover alarm. Note: the phase sequence monitoring can be disabled. To disable the alarm, refer to the “Structure” section ATTENTION: in this mode, if the wiring is not in the correct sequence, the motor will rotate in the reverse direction.
Troubleshooting	• Check that wiring on L1, L2, L3 is in the correct sequence. • If you need to reverse the motor, make sure that the phase sequence LED is ON (phase sequence protection disabled).

Number of flashes	3
Alarm	Line voltage out of range
Alarm description	At every power-up the RSGT automatically detects the supply voltage level and determines whether it is working on a 220, 400, 480* or 600* V supply. The under- or over- voltage alarm level is then set at a level of -20% and + 20% (from the measured supply voltage level) respectively. If the supply voltage level is out of these limits for more than 5 seconds then the line voltage out of range alarm will be triggered. * Applies to RSGT60 models. Note: for RSGT60 over-voltage alarm level (for the case of a 600V supply) is 675V (600V + 12.5%).
Alarm recovery period	5 minutes
Consecutive alarms for hard reset	5
Action to recover alarm	The alarm will self-recover (in auto-recovery mode) after 5 minutes from when the supply voltage is within limits. (If manual reset mode is applied, alarm can be cleared as instructed in the “Structure” section).
Troubleshooting	• Check supply voltage level across L1, L2, L3 terminals. • Make sure that you are not using a RSGT40 model on a supply voltage > 440 VAC.

Number of flashes	4
Alarm	Phase loss (motor side)
Alarm description	If any of the phases on the load (motor) side becomes open the RSGT will trip after 5 seconds to protect the motor from running/ starting on 2 phases. Note: this alarm will also be triggered when a current unbalance of > 20% is detected on any of the three line currents for a minimum of 5 secs. Additionally if a SCR and/or bypass relay is open (damaged) the same alarm will be triggered.
Alarm recovery period	5 minutes
Consecutive alarms for hard reset	5
Action to recover alarm	Check connections on the output side of the soft starter and on the motor terminals. The alarm will self-recover (in Auto-recovery mode) after 5 minutes. (If manual reset mode is applied, alarm can be cleared as instructed in the “Structure” section).
Troubleshooting	• Check for any loose connections on the T1, T2, T3 side of the soft starter. • Check for any loose connections on the motor terminals. • Check motor windings.

Number of flashes	5
Alarm	Locked rotor
Alarm description	If a current ≥ 5xFLC setting for 100 msec is detected, the RSGT will issue the locked rotor alarm.
Alarm recovery period	5 minutes
Consecutive alarms for hard reset	5
Action to recover alarm	The alarm will self-recover (in Auto-recovery mode) after 5 minutes. (If manual reset mode is applied, alarm can be cleared as instructed in the "Structure" section).
Troubleshooting	• Check that FLC setting is not smaller than motor name plate current. • Check that the RSGT model is suitably rated for the motor. • Check motor windings resistance to check if motor is damaged.

Number of flashes	6
Alarm	Dry-run
Alarm description	If less than 50% of FLC current flows for 5 seconds, dry-run alarm will be triggered.
Alarm recovery period	5 minutes
Consecutive alarms for hard reset	5
Action to recover alarm	The alarm will self-recover (in Auto-recovery mode) after 5 minutes (If manual reset mode is applied, alarm can be cleared as instructed in the "Structure" section).
Troubleshooting	• Check that the FLC setting is not too much higher than the motor name plate current. • Check motor load.

Number of flashes	7
Alarm	Over-temperature
Alarm description	The RSGT constantly measures the heatsink and thyristors (SCRs) temperature. If the maximum internal temperature is exceeded (for 0.5 sec) an over-temperature alarm is triggered. This condition can be triggered by too many starts per hour, an over-load condition during starting and/or stopping or a high surrounding temperature.
Alarm recovery period	Depends on the cooling period. The RSGT will only recover if the internal temperature is within safe limits.
Consecutive alarms for hard reset	5
Action to recover alarm	The alarm will self-recover (in Auto-recovery mode) - the recovery period will depend on the cooling time required by RSGT. The higher the surrounding temperature, the longer the cooling period. (If manual reset mode is applied, alarm can be cleared as instructed in the "Structure" section).
Troubleshooting	• Check that the specified number of starts/hr are not exceeded. • Check that the surrounding temperature around the soft starter is within limits.

Number of flashes	8
Alarm	Overload
Alarm description	The overload alarm can be triggered in case of the following conditions: Measured current > 1.05 x FLC during transition from ramp-up to bypass and also during bypass. Load current > FLC. Trip time will vary according to Trip Class 10.
Alarm recovery period	Depends on the cooling period. To disable class 10 overload protection follow the instructions in the "Structure" section. The RSGT will only recover if the internal temperature is within safe limits.
Consecutive alarms for hard reset	5
Action to recover alarm	The alarm will recover automatically after (approx.) 5 minutes. (If manual reset mode is applied, alarm can be cleared as instructed in the "Structure" section). Note: allow enough time for the motor to cool before attempting the next start.
Troubleshooting	• Make sure that the FLC setting is according to the current on the motor name plate. • Check for any blockages in the load. • If overload alarm occurs during ramp-up try to set a shorter ramp-up time or increase the FLC setting.

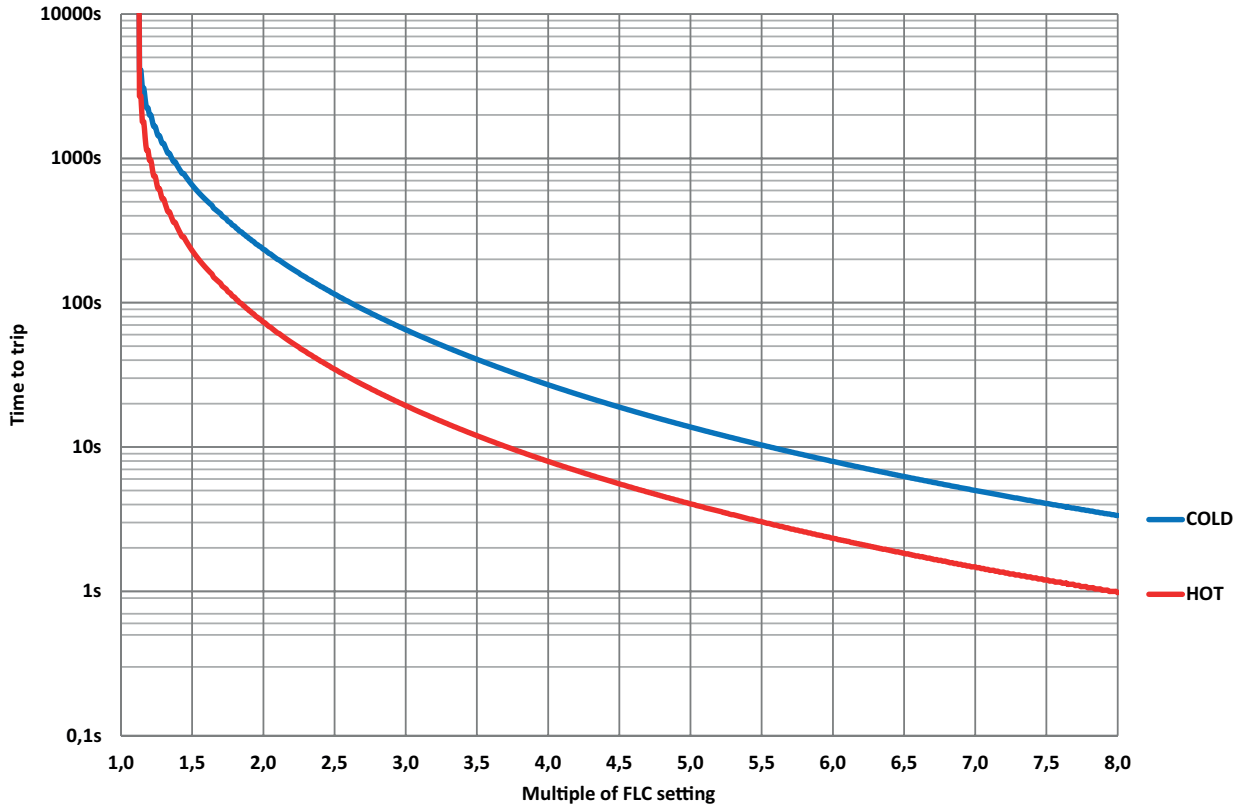

Fig. 11 *RSGT Class 10 motor overload trip profile*

PTC resistance - P1, P2 connection *		
< 500Ω	No Trip	Normal running
> 1000Ω	Trip	Overload alarm (8 flashes) & alarm relay activated
< 300Ω	Reset	

Remote reset of alarms (R1, R2)*	To reset alarms via the R1-R2 terminals you need to: Make sure that the alarm reset mode is set to MANUAL (MANUAL LED ON). To set the alarm reset mode to MANUAL press the Test/Reset button for 5 seconds when the RSGT is in IDLE mode. When RSGT is in alarm mode, short the terminals R1, R2 for 1 second. This will clear the alarm and RSGT will go to IDLE state. Note: do not apply voltage on R1, R2 terminals as this might damage the soft starter.

Number of flashes	9
Alarm	Supply voltage unbalance
Alarm description	The RSGT measures the voltages on all the three phases and if there is a difference of more than 20% for ≥ 5sec between any of the phases, the RSGT will trigger the voltage unbalance alarm.
Alarm recovery period	5 minutes
Consecutive alarms for hard reset	4
Action to recover alarm	The alarm will recover automatically after 5 minutes. (If manual reset mode is applied, alarm can be cleared as instructed in the “Structure” section).
Troubleshooting	• Check supply voltage level across L1, L2, L3 terminals. • Check connections on the L1, L2, L3 terminals.

Number of flashes	10
Alarm	Shorted thyristor (SCR)
Alarm description	In case the RSGT detects that there is a damaged (shorted) thyristor (SCR) on any of the three phases, the soft starter will trip.
Alarm recovery period	-
Consecutive alarms for hard reset	1
Action to recover alarm	Note: this alarm is not resettable and it is suggested to replace the unit and contact a Carlo Gavazzi representative should this alarm occur.
Troubleshooting	• Check resistance across L1-T1 and L3-T3 to check for any short. • If any of the SCRs is damaged, replace the soft starter.

Number of flashes	Fully ON
Alarm	Internal fault
Alarm description	In case there is an internal fault in the RSGT circuitry, the Red LED will remain continuously ON.
Alarm recovery period	-
Consecutive alarms for hard reset	1
Action to recover alarm	Note: this alarm is not resettable and it is suggested to replace the unit and contact a Carlo Gavazzi representative should this alarm occur.
Troubleshooting	• Check resistance across L1 - T1 and L3 - T3 to check for any short. • If any of the SCRs is damaged, replace the soft starter.

* Applies to RSGT 75/120 mm models only

Short circuit protection

Type 1 protection implies that after a short circuit, the device under test will no longer be in a functioning state. The product variants listed in the table hereunder are suitable for use on a circuit capable of delivering not more than 5,000* symmetrical Amperes, 400 or 600 Volts maximum when protected by fuses. Tests at 5,000 A* were performed with Class RK5 fuses, fast acting; please refer to the table below for maximum allowed ampere rating of the fuse. Use fuses only.
* For RSGT 70 to RSGT 90 models 10,000 symmetrical Amperes apply.

Note: For fuse size of 600A or less, Class CC, G, H, K, J, RK1 or T fuses can be used instead of RK5 fuses.

Time delay fuses (UL 60947-4-2)

Item No.	Max. fuse size [A]	Current [kA]	Class	Max. voltage [VAC]
RSGT..12	15	5	RK5	600
RSGT..16	20			
RSGT..25	25			
RSGT..32	50			
RSGT..45	50			
RSGT..55	60			
RSGT..70	100	10		
RSGT..90				

Manual motor starters

Item No.	Model No.	Current [kA]	Max. voltage [VAC]
RSGT..12	GMS32H-17	10	400
RSGT..16	GMS32H-17		
RSGT..25	GMS32H-32		
RSGT..32	GMS32H-32		
RSGT..45	GMS63H-50		
RSGT..55	GMS63H-63		
RSGT..70	GMS100H-75		
RSGT..90	GMS100H-100		

Note: products protected with manual motor starters must be wired with a minimum length of 2.0 m (10.0 m for 12, 16 A models) of Cu wire conductor with a maximum cross-sectional area of 2.5 mm^2 for 12 Arms and 16 Arms devices, 10 mm^2 for 25, 32, 45 Arms devices, 16 mm^2 for 55 Arms devices and 50 mm^2 for higher currents. The length includes the conductors from the voltage source to the manual motor starter to the soft starter and from the soft starter to the load.

COPYRIGHT ©2024
Content subject to change.
Download the PDF: www.gavazziautomation.com