Safety modules SMS20, SMS31

For emergency stop, safety gates, magnetic switches, safety limit switches



Description

The SMS20 and SMS31 safety modules are designed in Category 4, Performance Level e in accordance with the Machine Directive EN ISO 13849-1 to monitor and control safely the safety circuits in applications with emergency stops, safety gates, safety magnetic switches, safety limit switches and electromechanical interlocks.
They are also used to control safely the safety circuits of the lift car levelling and the lift pit inspection, in compliance with the Lifts Standards EN81-20 and EN81-50.

Main features

- **Multiple types inputs.** The safety modules can monitor the safety state of several types of inputs: E-stop, E-gate, limit switches, non-contact switches
- **Machinery Directive compliance.** Cat. 4, PL e in accordance with EN ISO 13849-1
- **Lift Directive compliance.** EN81-20 and EN81-50 standards
- **Multiple operating modes.** The modules can operate with automatic, manual or monitored manual start/reset
- **Safety outputs.** Electromechanical forcibly guided safety relays with 3NO+1NC aux outputs (SMS31) or 2NO outputs (SMS20)
- **Flexible wiring.** The modules are equipped with detachable screw terminals for easy wiring and product maintenance; the terminal blocks are coded so to avoid wiring mistakes
- **Diagnostic.** LED indications for power supply, state of the safety inputs and state of the safety outputs
- **Compact.** 1-DIN, W x H x D: 17,5 x 110,8 x 121,1mm
- **Approval** by TÜV. CE, cULus

Main functions

- Monitoring of safety circuits in applications with emergency stop buttons, emergency gates with electromechanical or non-contact safety switches, safety accesses with safety magnetic switches and interlocks
- Monitoring of safety circuits with magnetic or electromechanical safety switches in Lifts to control the lift car levelling
- Double or single safety channel operation
- Control of up to 3 NO safety outputs with electromechanical safety relays
- Selectable start/reset operating mode Manual, Automatic or Monitored Manual Start
- Diagnostic of the safety circuit through on-board LED indications for power supply, status of safety channels and status of safety outputs
- 1 NC auxiliary output (SMS31) that can be used for external status indication

References

Type selection

NO safety outputs	Aux NC output	Ordering code
2	0	**SMS20**
3	1	**SMS31**

Further reading

Information	Where to find it	QR
Instruction manual	http://gavazziautomation.com/images/PIM/MANUALS/ENG/SM_IM.pdf	
Software SISTEMA	http://www.gavazzi-automation.com/nsc/HQ/EN/safety_modules	

COPYRIGHT ©2020
Content subject to change. Download the PDF: www.productselection.net

Structure

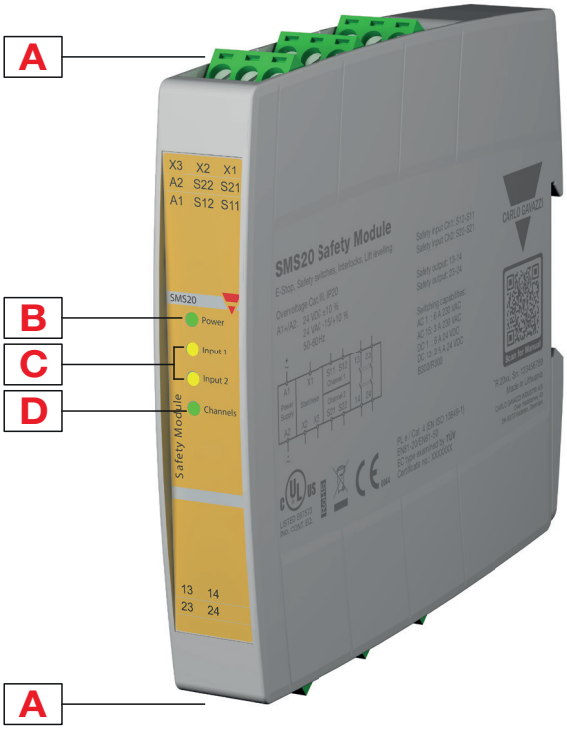

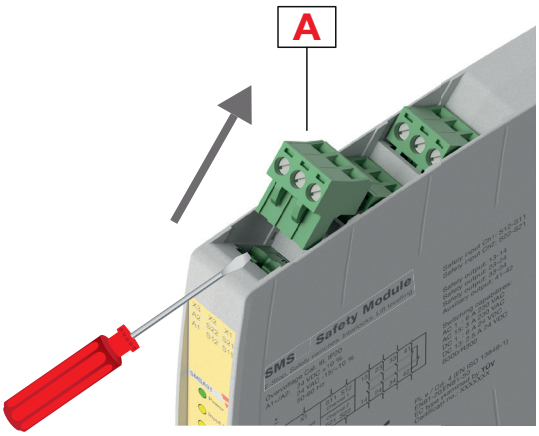

Element	Component	Function
A	Pluggable terminal blocks	Power supply, start signal, safety inputs and outputs
B	LED	Power supply status
C	LED	Safety inputs status
D	LED	Safety outputs status

Features

General

	SMS20	SMS31
Material	PA-GF, self-extinguishing: UL 94 V-0	
Weight	209g	239g
Assembly	DIN rail mounting (According to EN 50022)	

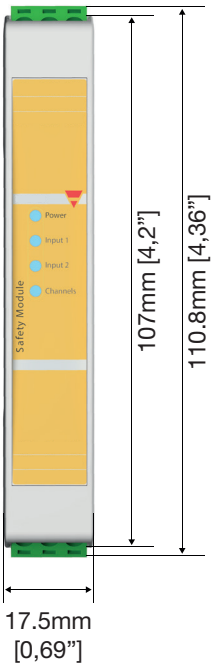

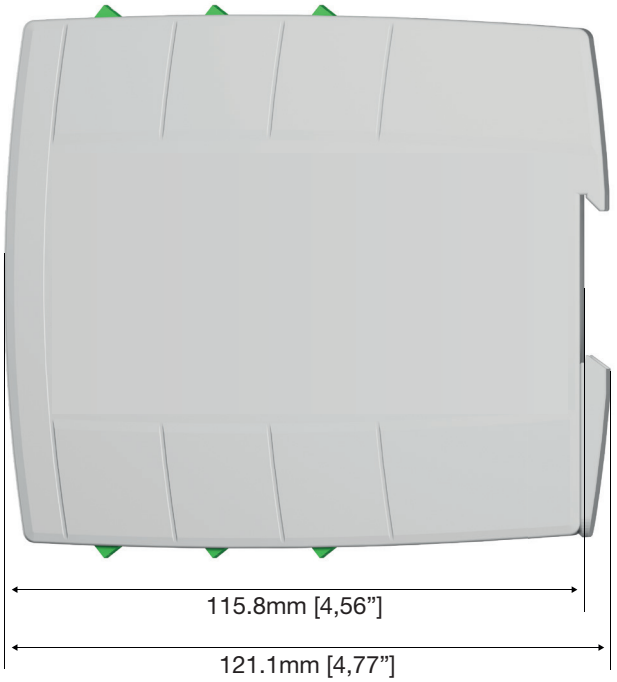

Power Supply

Power supply	24Vdc ± 10%; 24Vac -15%/+10%, 50÷60 Hz, Class 2
	Overvoltage category III
	Short circuit protection internal PTC
	Rated insulation voltage 4 kV

Inputs

Number of safety channels	2
Safety inputs (contact inputs)	S11-S12 and S21-S22
Loop resistance	Max. 1 kΩ
Input current	Typical 5 mA

Outputs

	SMS20	SMS31
NO safety outputs	2	3
NC auxiliary output	0	1
Type	Voltage free contact output, relays with forcibly guided contacts	
Max current rating - single output	@ 60°C (140°F) operating temperature: AC 1: 250V / 6A / 2000 VA - AC 15: 230V / 3A DC 1: 24V / 6A - DC 13: 24V / 2.5A / 0.1 Hz UL508, pilot duty: B300 / R300	
Max quadratic current	Spacing between modules ≥100mm: 72A^2 @40°C (104°F) ambient temperature Modules mounted stacked: 26A^2 @25°C (77°F) ambient temperature Please refer to the derating curves in installation manual	
Mechanical life	> 10^7 operations	
Electrical life AC1 (360 s/h)	~ 10^5 operations	

Safety parameters

ISO 13849-1 Safety Category	Cat. 4
ISO 13849-1 Performance Level	PL e
DIN EN 81-20	Certified
DIN EN 81-50	Certified
$MTTF_D$ [a]	420,8
PFH_D [1/h]	1,85 E-10
DCavg	99%
ß	5,00 E-02
$ß_D$	2,00 E-02

Compatibility and conformity

Low Voltage Directive 2014/35/EU	**EN 60947-5-1** Low-voltage switchgear and controlgear - Control circuit devices and switching elements - Electromechanical control circuit devices
EMC Directive 2014/30/EU	**EN 60947-5-1** Low-voltage switchgear and controlgear - Control circuit devices and switching elements - Electromechanical control circuit devices
Machinery Directive 2006/42/EC **EC type examined by TÜV** **Cert. no. 44 205 15058307**	**EN ISO 13849-1** Safety of machinery - safety related parts of control systems - General principles for design **EN 60204-1** Safety of machinery - Electrical equipment of machines - General requirements E-stop category 0 **EN 61326-3-1** Electrical equipment for measurement, control and laboratory use. EMC requirements. Immunity requirements for safety-related systems and for equipment intended to perform safety-related functions (functional safety) - General industrial applications
Lift Directive 2014/33/EU **EU type examined by TÜV** **Cert. no. 44 208 15058307**	**EN 81-20** Safety rules for the construction and installation of lifts. Part 20: passenger and goods passenger lifts **EN 81-50** Safety rules for the construction and installation of lifts. Part 50: design rules, calculations, examinations and tests of lift components **EN 12015** Electromagnetic compatibility. Product family standard for lifts, escalators and passenger. Emission **EN 12016** Electromagnetic compatibility. Product family standard for lifts, escalators and passenger. Immunity
Approvals	CE cULus LISTED RoHS COMPLIANT

Environmental

Protection grade	IP40 on frontal part of the housing, IP20 on the terminals. The device has to be installed in a cabinet with protection degree of IP54.
Pollution degree	2
Operating Temperature	-25 ÷ +60°C (-13 ÷ 140°F), UL: +40°C (104°F); tested @ temp 65°C (149 °F) as per lift norm
Storage Temperature	-30 ÷ +70°C (-22 ÷ 158°F)
Ambient humidity range	R.H. ≤95% non condensing

Connection Diagrams

SMS20

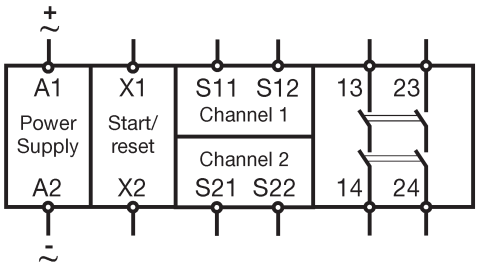

Terminal	Function
A1	power supply 24 Vdc (+)/Vac(~)
A2	power supply 24 Vdc (-)/Vac(~)
S11-S12	channel 1 NO input
S21-S22	channel 2 NO input
X1-X2	manual start / automatic start
X1-X3	monitored manual start
13-14	NO safety output
23-24	NO safety output

Double channel mode

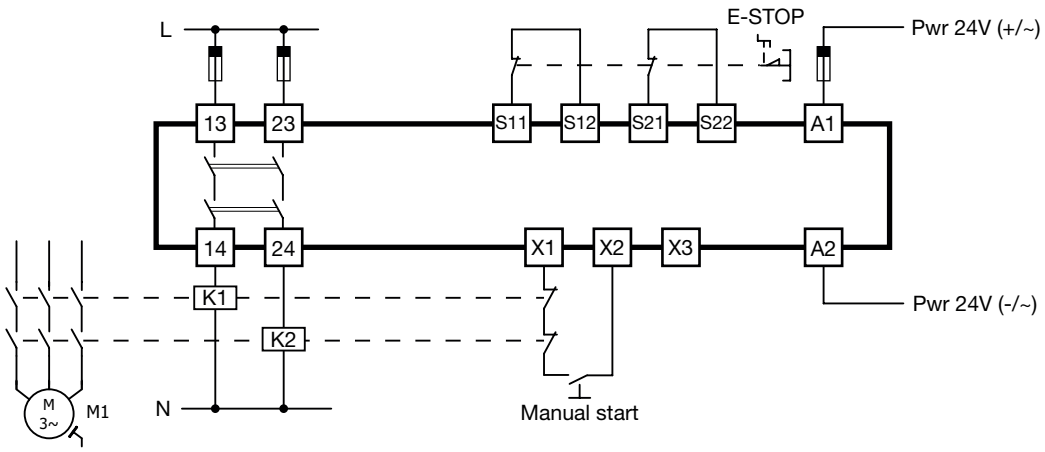

SMS31

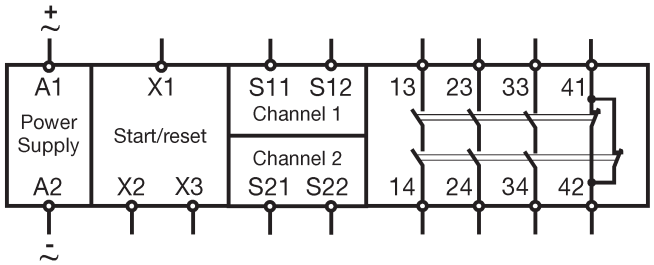

Terminal	Function
A1	power supply 24 Vdc (+)/Vac(~)
A2	power supply 24 Vdc (-)/Vac(~)
S11-S12	channel 1 NO input
S21-S22	channel 2 NO input
X1-X2	manual start / automatic start
X1-X3	monitored manual start
13-14	NO safety output
23-24	NO safety output
33-34	NO safety output
41-42	NC auxiliary output

Double channel mode

