

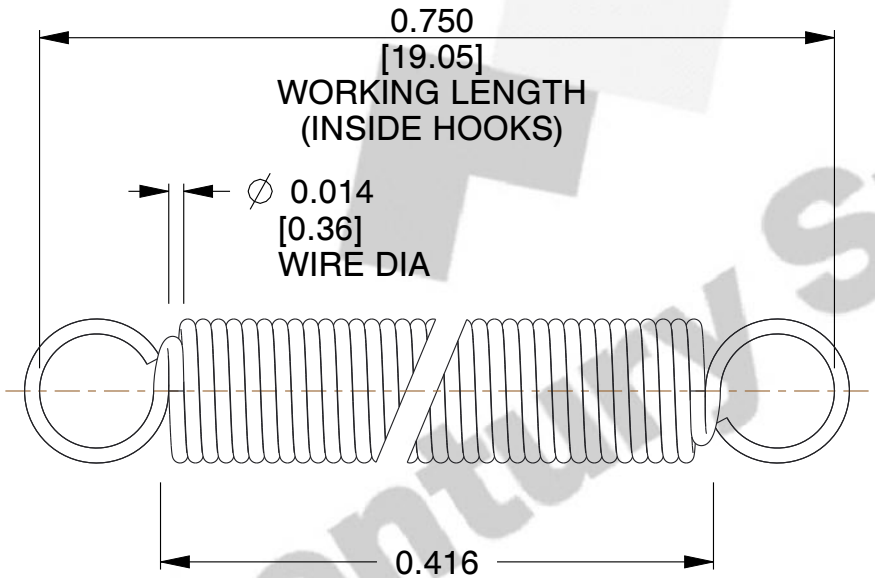

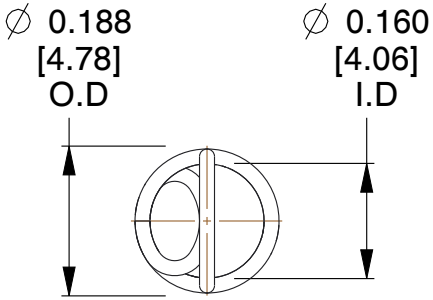

NOTES:

1. Material : Stainless Steel
2. Finish :
3. Sugg Max. Load : 0.550 (lbs)
4. Sugg Max. Deflection : 0.330 (in)
5. All Drawing Dimensions are in Inches [mm]
6. Coil%2

COMPONENT	SPRINGS			
Century Spring www.centuryspring.com 800.237.5225	This file and any associated information and specifications are provided for reference and evaluation purposes only, and is subject to change without notice. MW Industries makes no representations, warranties or guarantees as to the appropriateness, accuracy, completeness, or suitability for any purpose, of the file, information or specifications. You are solely responsible for the use of the file, information or specifications.	This drawing is the property of MW Industries. It contains confidential, proprietary information that is MW Industries property. Do not disclose to or duplicate for others except as authorized by MW Industries.	**ZZ3-11**	**UNIT**
				INCH [mm]
				SHEET
		SCALE 3.000	EXTENSION SPRINGS	1 of 1

Century Spring