TABLE 1	
LANYARD OPTION	LANYARD MATERIAL & LENGTH
-1	CAP ONLY (NO LANYARD)
-2-	2.5 BRASS BEAD CHAIN
-3-	2.5 NYLON BEAD CHAIN
-4-	3.0 BRASS BEAD CHAIN
-5-	3.0 NYLON BEAD CHAIN
-6-	6.0 BRASS BEAD CHAIN
-7-	6.0 NYLON BEAD CHAIN
-8-	4.0 BRASS BEAD CHAIN
-9-	4.0 NYLON BEAD CHAIN
-10-	10.0 BRASS BEAD CHAIN
-11-	10.0 NYLON BEAD CHAIN
-12-	2.5 STAINLESS STEEL ROPE
-13-	3.0 STAINLESS STEEL ROPE
-14-	6.0 STAINLESS STEEL ROPE
-15-	4.0 STAINLESS STEEL ROPE
-16-	7.0 STAINLESS STEEL ROPE
-17-	4.5 STAINLESS STEEL ROPE
-18-	18.0 STAINLESS STEEL ROPE (-D2 THROUGH -DD8 ONLY)

TABLE 2				
BLKHD JACK MTG LUG OPTION	Ø"A"	Ø"B"	"C"	"D"
-D2	.630	.750	1.066	.450
-D3	.505	.625	.941	.388
-D4	.439	.562	.878	.355
-D5	.380	.500	.816	.325
-D6	.317	.437	.753	.295
-D7	.281	.406	.722	.278
-D8	.610	.750	1.066	.450
-D9	.567	.687	1.003	.419
-D10	.192	.312	.628	.231
-DD8	.330	.450	.766	.300

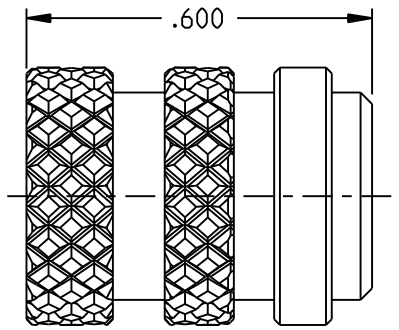

RFI3455-1 SHOWN
NO LANYARD OPTION

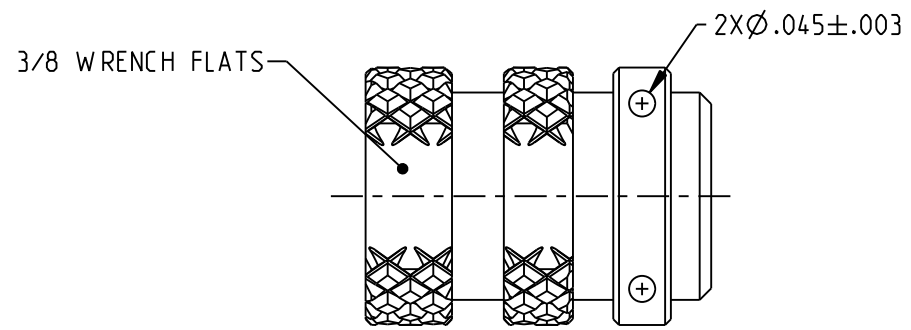

RFI3455S-1 SHOWN
NO LANYARD OPTION
w/SAFTEY WIRE OPTION

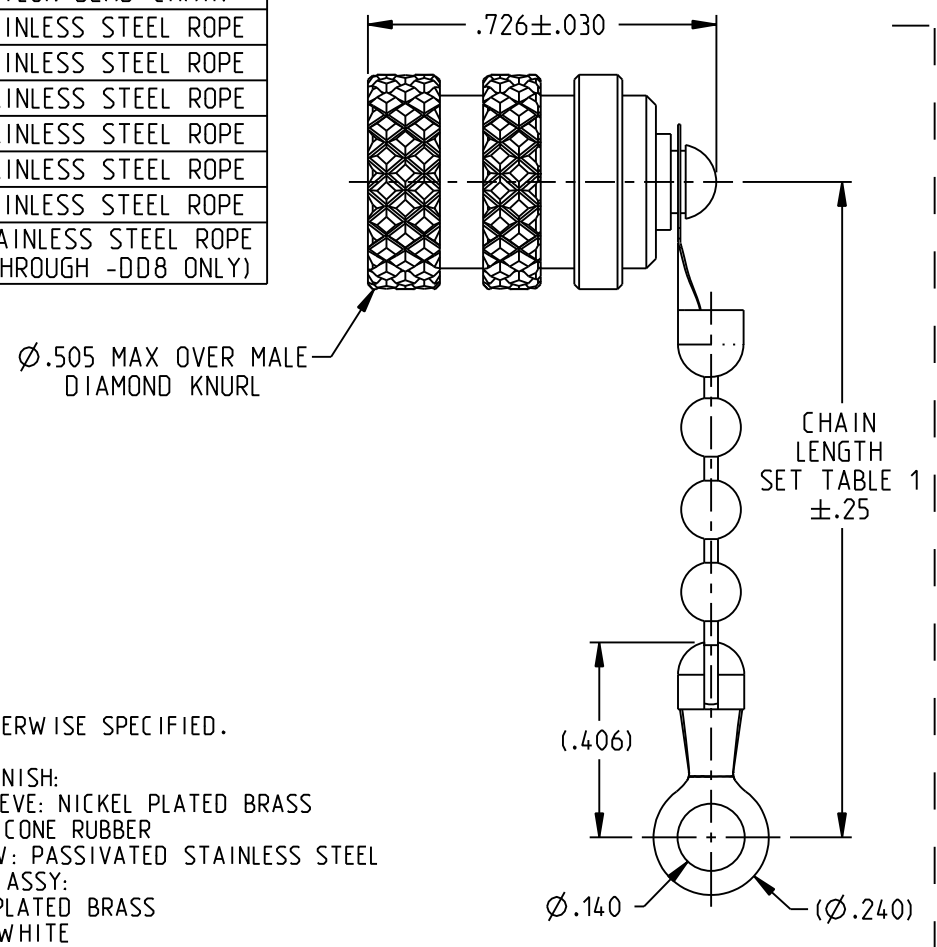

RFI3455-2 THRU RFI3455-11
BEAD CHAIN & END RING

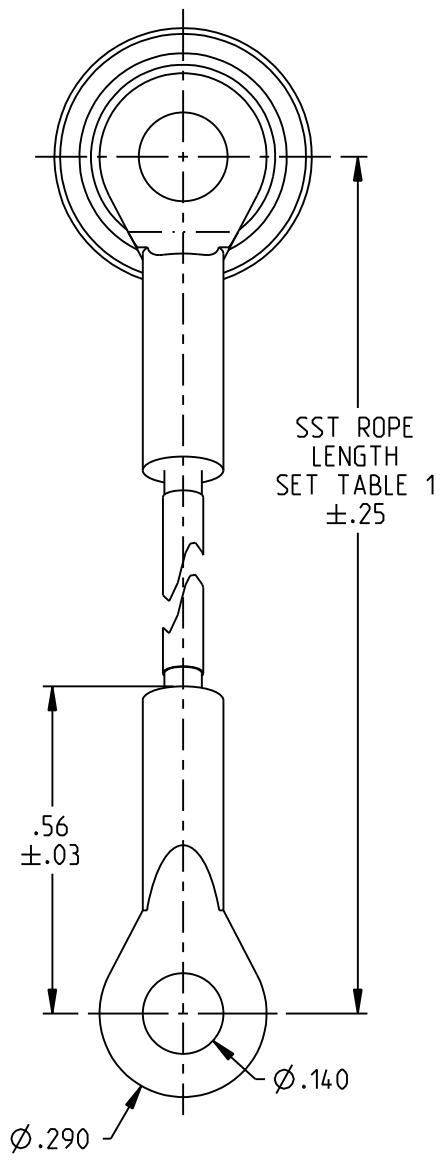

RFI3455-12 THRU RFI3455-17
SST ROPE & MTG LUG

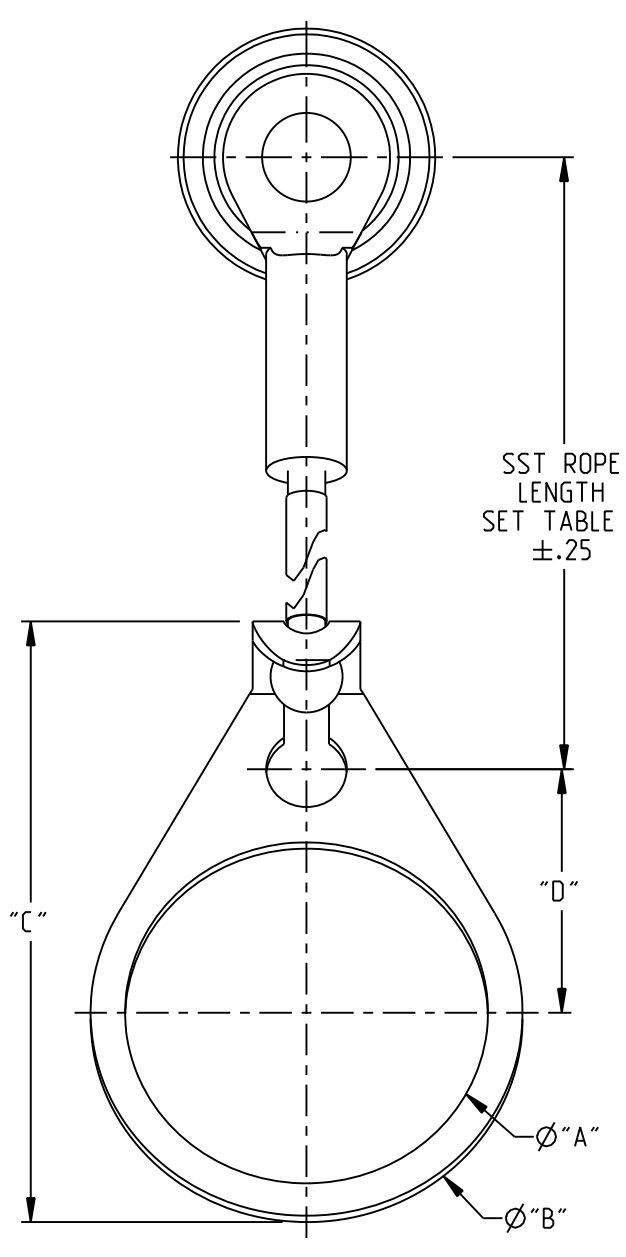

RFI3455-12-D2 THRU RFI3455-18-DD8
SST ROPE w/BULKHEAD MTG LUG

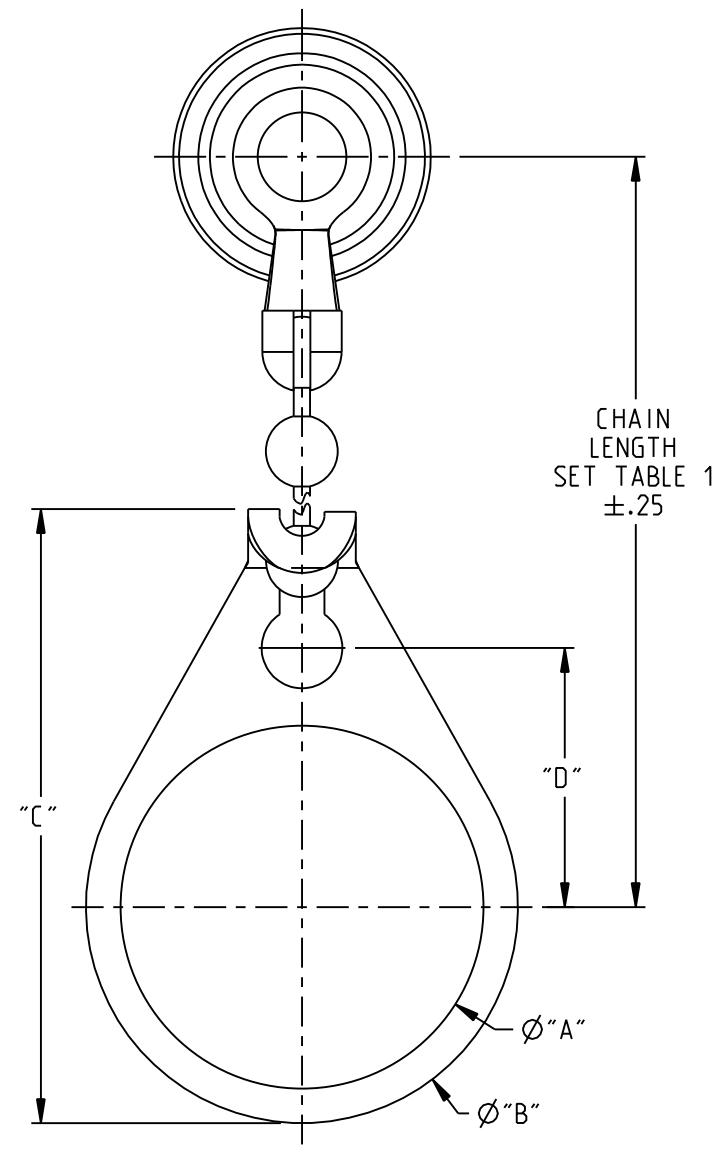

RFI3455-2-D2 THRU RFI3455-11-DD8
BEAD CHAIN w/BULKHEAD MTG LUG

NOTES: UNLESS OTHERWISE SPECIFIED.

1. MATERIAL & FINISH:
   1.1 BAYONET SLEEVE: NICKEL PLATED BRASS
   1.2 GASKET: SILICONE RUBBER
   1.3 DRIVE SCREW: PASSIVATED STAINLESS STEEL
   1.4 BEAD CHAIN ASSY:
      1.4.1 NICKEL PLATED BRASS
      1.4.2 NYLON, WHITE
      1.4.3 #6 END RING: NICKEL PLATED BRASS
   1.5 STAINLESS STEEL ROPE ASSY:
      1.5.1 CABLE: STAINLESS STEEL COVERED w/BLACK NYLON JACKET
      1.5.2 END RING: PASSIVATED STAINLESS STEEL
   1.6 BULKHEAD MOUNTING LUG: NICKEL PLATED BRASS

2. EXAMPLE OF COMPLETE MODEL NUMBER:

RFI3455S-12-D2
- D2 — MTG LUG OPTION PER TABLE 2
- 12 — LANYARD OPTION PER TABLE 1
- S — SAFETY WIRE HOLES OPTION
- RFI3455 — BASIC MODEL NUMBER

3. NOTE THAT LENGTH FOR THE SST ROPE WITH BULKHEAD MOUNTING LUG OPTION IS NOT MEASURED TO THE CENTER OF THE BULKHEAD MOUNTING LUG.

UNLESS OTHERWISE SPECIFIED
DIMENSIONS COMMON TO ALL MODEL NUMBERS

NOTICE: The information in this drawing is PROPRIETARY and must not be used without the permission of Cinch Connectivity Solutions. It may contain data whose export is restricted. Verify status prior to exporting.

INTERPRET DRAWING IN ACCORDANCE WITH ASME Y14.5-2018

3RD ANGLE PROJECTION

RoHS2 ☑ 2015/863/EU

UNLESS OTHERWISE SPECIFIED UNITS: INCH

.XX ±.02
.XXX ±.010
ANGLES ±2°

TROMPETER

Title: RFI/DUST CAP, TRL SERIES

Model No. RFI3455X-YY-ZZZ

Size B | DO NOT SCALE DRAWING | Date: 10/11/2021 | Sheet 1 OF 1