CFM20S SERIES
20 WATT OPEN FRAME AC-DC MODULES

Features

- Universal Input Range 90~264V_{ac}
- High Efficiency up to 87%
- 1.30"x 2.38" Size
- Class II
- No Load Power <0.1W
- Approval IEC/EN/UL 62368-1 Ed 3.0
- Design Meets IEC/EN 60335-1
- Approval EN 55032 Class B and CISPR/FCC Class B
- Operating Altitude 5000m
- Continuous Short Circuit Protection
- Over Voltage Protection
- Over Voltage Category OVC II & OVC III



E176177

MODEL NUMBER	OUTPUT VOLTAGE	OUTPUT CURRENT	VOLTAGE ACCURACY NOTE1	RIPPLE& NOISE NOTE2	LINE REGULATION NOTE3	LOAD REGULATION NOTE4	%EFF. (Typ.) NOTE5
CFM20S050	5 V	4.0 A	±2%	100 mV	±0.5%	±1%	84%
CFM20S120	12 V	1.67 A	±2%	120 mV	±0.5%	±1%	86%
CFM20S150	15 V	1.34 A	±2%	150 mV	±0.5%	±1%	86%
CFM20S240	24 V	0.83 A	±2%	240 mV	±0.5%	±1%	86%
CFM20S480	48 V	0.42 A	±2%	480 mV	±0.5%	±1%	87%

Note:

1. Voltage accuracy is set at 100% full load.
2. Add a 0.1uF ceramic capacitor and a 10uF E.L. capacitor to output for ripple & noise measurement @20MHz B.W.
3. Line regulation is measured from high line to low line with 100% full load.
4. Load regulation is measured from 10% to 100% full load.
5. Typical efficiency at 230 V_{ac} and 100% full load at 25℃.
6. T Version wafer with JST B3B-XH/B4B-XH and mate with JST housing XH series or equivalent.

PART NUMBER

Series	Number of Outputs	Nominal Output Voltage	Type
CFM20	X	XXX	-X (Option)
CFM20	S：Single	050：05V 120：12V 150：15V 240：24V 480：48V	Blank：PCB mount T：Wafer E：Encapsulated

Part Number Example:

CFM20S120: 20W, Single 12Vdc Output, PCB Mount Type

CFM20S120-T: 20W, Single 12Vdc Output, Wafer Type

TECHNICAL SPECIFICATIONS

(All specifications are typical at nominal input, 100% full load at 25℃ unless otherwise noted.)

ABSOLUTE MAXIMUM RATINGS

PARAMETER	NOTES and CONDITIONS	Device	Min.	Typ.	Max.	Units
Input Voltage	Safety approvals only to the AC input	All	90 120		264 370	V_{ac} V_{dc}
Operating Temperature	See Derating Curve	All	-40		80	℃
Storage Temperature		All	-40		85	℃
Operating Altitude	IEC/EN/UL 62368-1 OVC II IEC 62368-1 OVC III Design meets IEC/EN 60335-1 OVC II	All			5000 2000 3000	m

INPUT CHARACTERISTICS

PARAMETER	NOTES and CONDITIONS	Device	Min.	Typ.	Max.	Units
Operating Voltage Range		All	100		240	V_{ac}
Input Frequency Range		All	50		60	Hz
Maximum Input Current	100% full load, V_{in}=100V_{ac}	All			0.6	A
Leakage Current		All			0.1	mA
Inrush Current	V_{in}=240V_{ac}, Cold start at 25℃	All		35		A

OUTPUT CHARACTERISTICS

PARAMETER	NOTES and CONDITIONS	Device	Min.	Typ.	Max.	Units
Output Voltage Set Point	V_{in}=Nominal V_{in}, I_o=I_o max., T_c=25℃	CFM20S050 CFM20S120 CFM20S150 CFM20S240 CFM20S480	4.90 11.76 14.70 23.52 47.04	5 12 15 24 48	5.10 12.24 15.30 24.48 48.96	V_{dc}
Operating Output Current Range	V_{in}=90V_{ac}~264V_{ac}, **See Derating Curve**	CFM20S050 CFM20S120 CFM20S150 CFM20S240 CFM20S480			4.00 1.67 1.34 0.83 0.42	A
Holdup Time	V_{in}=115V_{ac}	CFM20S050 Others		8 10		ms
Output Voltage Regulation						
Load Regulation	10% load to 100% full load	All			±1.0	%
Line Regulation	V_{in}=High line to low line	All			±0.5	%
Over Current Protection	Hiccup mode (Auto recovery)	All	110		180	%
Short Circuit Protection	Auto recovery	All				
Over Voltage Protection	Latch mode (AC recycle to restart)	CFM20S050 CFM20S120 CFM20S150 CFM20S240 CFM20S480			8.0 16.5 19.6 31.5 60.0	V_{dc}

PARAMETER	NOTES and CONDITIONS	Device	Min.	Typ.	Max.	Units
Output Ripple and Noise	1. Add a 0.1uF ceramic capacitor and a 10uF aluminum electrolytic capacitor to output 2. Oscilloscope is 20MHz bandwidth 3. Ambient temperature=25℃	CFM20S050			100	mV
		CFM20S120			120	
		CFM20S150			150	
		CFM20S240			240	
		CFM20S480			480	
Load Capacitance	1. V_{in}=115V_{ac} and 230V_{ac} 2. Output is 100% full load 3. Ambient temperature=25℃	CFM20S050			4000	uF
		CFM20S120			1670	
		CFM20S150			1340	
		CFM20S240			830	
		CFM20S480			420	
Efficiency	1. V_{in}=230V_{ac} 2. Output is 100% full load 3. Ambient temperature=25℃	CFM20S050		84		%
		CFM20S120		86		
		CFM20S150		86		
		CFM20S240		86		
		CFM20S480		87		

ISOLATION CHARACTERISTICS

PARAMETER	NOTES and CONDITIONS	Device	Min.	Typ.	Max.	Units
Input to Output	1 Minute	All			4300	V_{ac}
Isolation Resistance	Input to output	All	100			MΩ

FEATURE CHARACTERISTICS

PARAMETER	NOTES and CONDITIONS	Device	Min.	Typ.	Max.	Units
Switching Frequency	P_{out}=max. rated power	All		65		kHz

GENERAL SPECIFICATIONS

PARAMETER	NOTES and CONDITIONS	Device	Min.	Typ.	Max.	Units
MTBF	I_o=100%; T_a=25℃ per MIL-HDBK-217F	All	1300			k hours
Humidity	Non-condensing	All			93	% RH
Shock	Meet MIL-STD-810F Table 516.5,Table 516.5-I 10ms, each axis 3 times(±X、±Y、±Z axis)	All		75		g
Vibration	Meet MIL-STD-810F Table 514.5C-VIII,15~2000Hz, X、Y、Z axis, 1 hour (each axis),. Total 3 hrs.	All		4		g
Weight	Blank (PCB mount)	All		35		grams
	E (Encapsulated)			95		
	T (Wafer)			36		
Dimensions	Blank (PCB mount)	All	2.38x1.30x0.906 Inches (60.5x33.0x23.00 mm)			
	E (Encapsulated)		2.48x1.40x0.933 Inches (63.0x35.6x23.70 mm)			
	T (Wafer)		3.00x1.30x0.831 Inches (76.2x33.0x21.10 mm)			
Safety	Class II, IEC/EN/UL 62368-1					Ed.3.0
EMC Emission	EN 55032:2015+A11:2020, 47 CFR FCC Part 15 Subpart B, ICES-003 Issue7, EN 61204-3:2000, EN 61000-6-3:2007+A1:2011+AC:2012, EN 61000-3-2:2019, EN 61000-3-3:2013+A1:2019					Class B
Conducted Disturbance	EN 55032:2015+A11:2020, 47 CFR FCC Part 15 Subpart B, ICES-003 Issue7, EN 61204-3:2000, EN 61000-6-3:2007+A1:2011+AC:2012					Class B
Radiated Disturbance	EN 55032:2015+A11:2020, 47 CFR FCC Part 15 Subpart B, ICES-003 Issue7, EN 61204-3:2000, EN 61000-6-3:2007+A1:2011+AC:2012					Class B
Harmonic Current Emissions	EN 61000-3-2:2019					
Voltage Fluctuations & Flicker	EN 61000-3-3:2013+A1:2019					
EMC Immunity	EN 55035:2017+A11:2020, EN 61204-3:2000, EN 61000-6-1:2007					
Electrostatic Discharge (ESD)	IEC 61000-4-2:2008					Criterion A

GENERAL SPECIFICATIONS

Radio-Frequency, Continuous Radiated Disturbance	IEC 61000-4-3:2020	Criterion A
Electrical Fast Transient (EFT)	IEC 61000-4-4:2012, ±0.5kV, ±1kV	Criterion A
Surge	IEC 61000-4-5:2014+A1:2017, L-N: ±0.5kV, ±1kV	Criterion A
Conducted Disturbances, Induced by RF Fields	IEC 61000-4-6:2013	Criterion A
Power Frequency Magnetic Field	IEC 61000-4-8:2009	Criterion A
Voltage Dips	IEC 61000-4-11:2020, Dip: 30% Reduction, Dip >95% Reduction	Criterion A
Voltage Interruptions	IEC 61000-4-11:2020, >95% Reduction	Criterion B
Application Note Link	CFM20S Series App Notes	

CHARACTERISTIC CURVE

Power Derating Curve

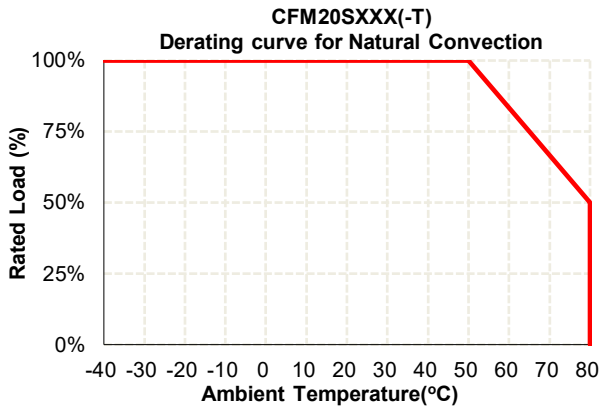

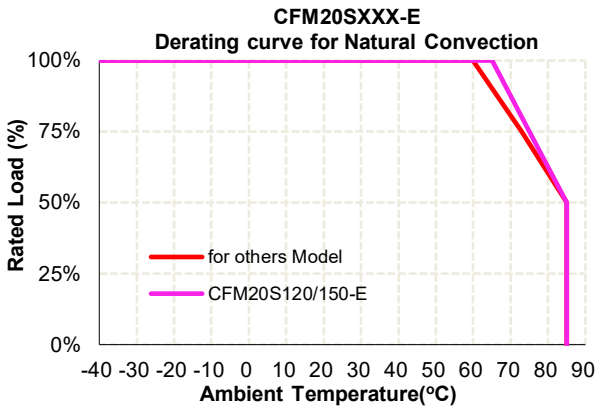

Performance Data

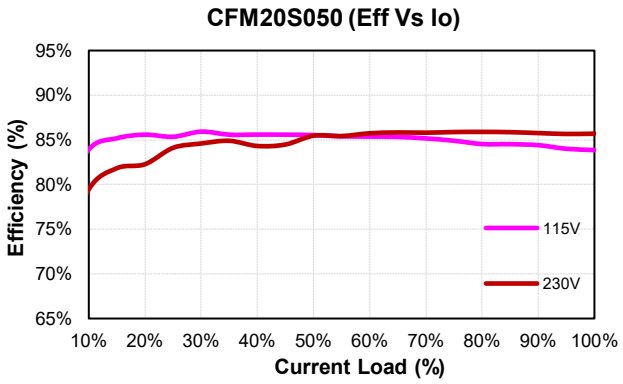

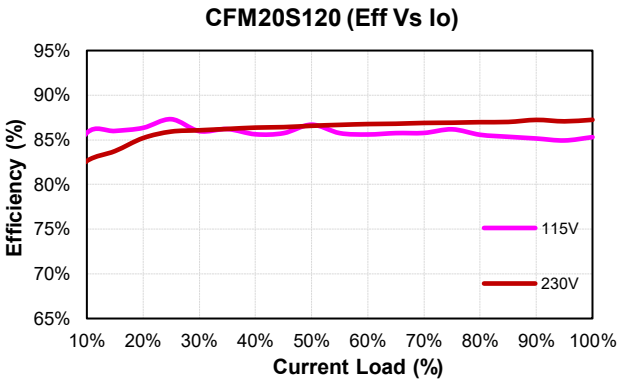

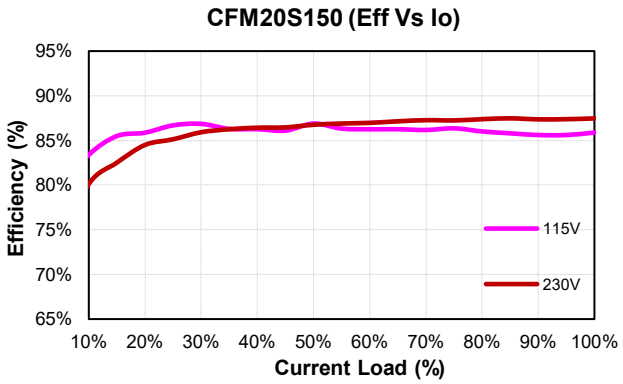

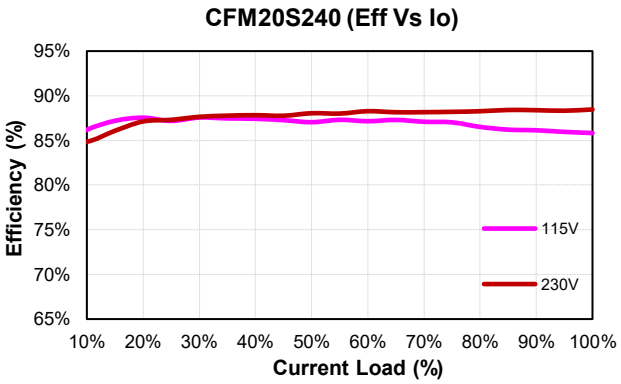

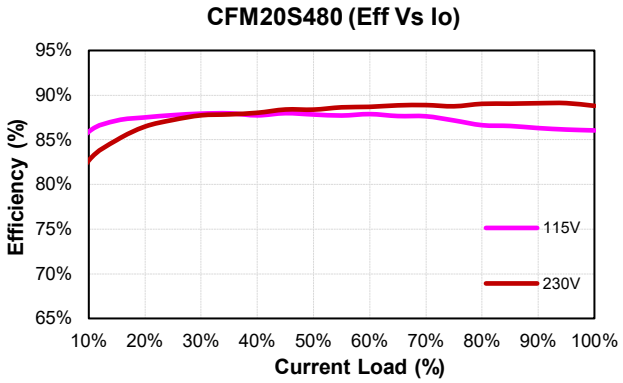

MECHANICAL SPECIFICATION

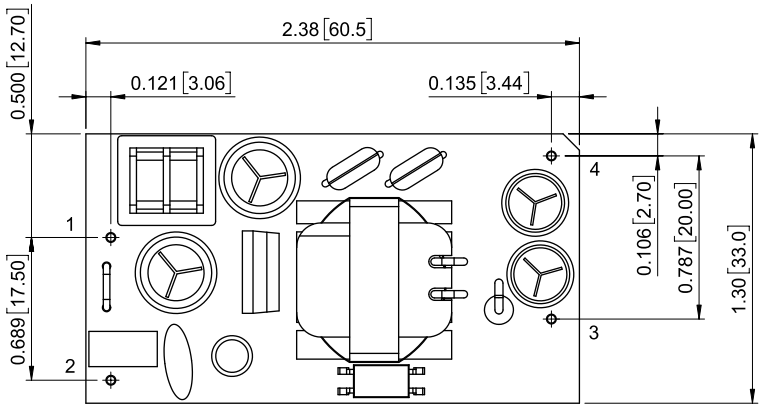

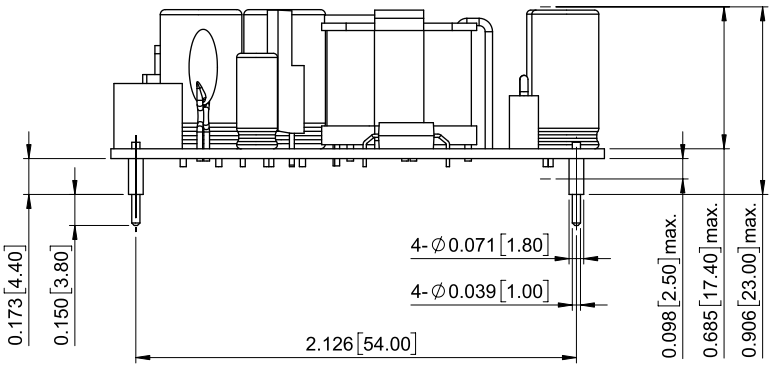

CFM20SXXX

All Dimensions in Inches[mm]
Tolerance Inches: x.xx=±0.03, x.xxx=±0.020
Millimeters: x.x=±0.7, x.xx=±0.50

Pin Connection

Pin	Function
1	ACN
2	ACL
3	+Vout
4	-Vout

MECHANICAL SPECIFICATION

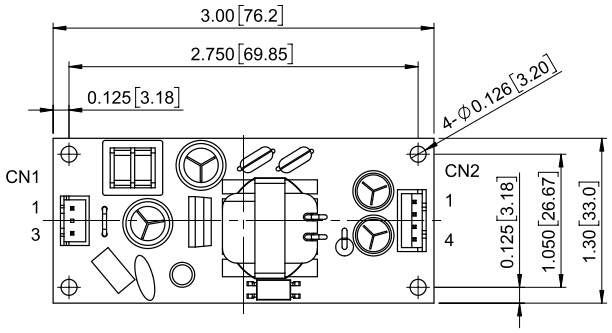

CFM20SXXX-T

All Dimensions in Inches[mm]
Tolerance Inches: x.xx=±0.03, x.xxx=±0.020
Millimeters: x.x=±0.7, x.xx=±0.50

AC Input Connector(CN1):JST B3B-XH-A(LF)(SN)(2N) or equivalent

Pin	Function	Mating Housing	Terminal
1	ACN	JST XHP-3 or equivalent	JST SXH-001T-P0.6N or equivalent
2	-		
3	ACL		

DC Output Connector(CN2):JST B4B-XH-A(LF)(SN) or equivalent

Pin	Function	Mating Housing	Terminal
1	-Vout	JST XHP-4 or equivalent	JST SXH-001T-P0.6N or equivalent
2	-Vout		
3	+Vout		
4	+Vout		

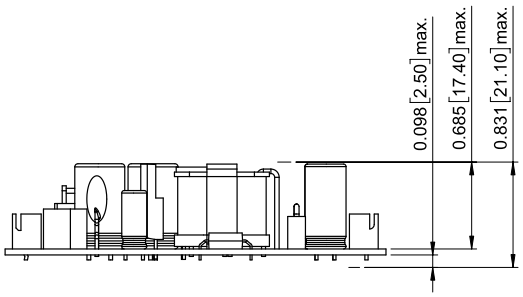

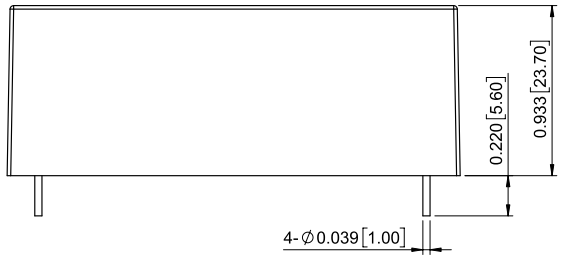

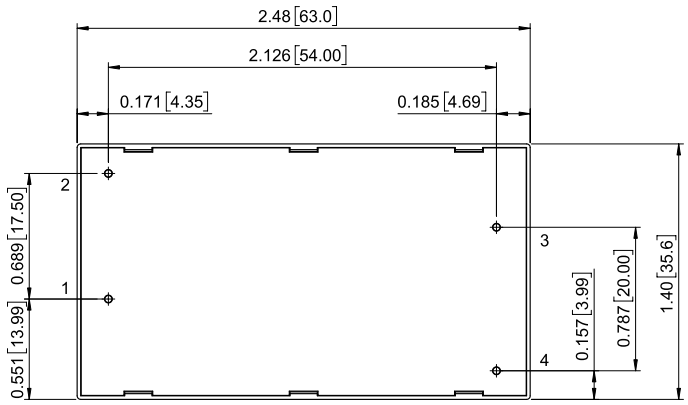

BOTTOM VIEW

CFM20SXXX-E

All Dimensions in Inches[mm]
Tolerance Inches: x.xx=±0.03, x.xxx=±0.020
Millimeters: x.x=±0.7, x.xx=±0.50

Pin Connection

Pin	Function
1	ACN
2	ACL
3	+Vout
4	-Vout

CINCON Electronics Co. Ltd.
Add: 14F, No. 306, Sec.4, Hsin Yi Rd., Taipei, Taiwan
Tel: 886-2-27086210
Fax: 886-2-27029852
E-mail: sales@cincon.com
Web: www.cincon.com