CHB75 SERIES

49.5 - 75 WATT WIDE INPUT DC-DC CONVERTERS SINGLE OUTPUT

E176177

FEATURES

* 49.5W-75W Isolated Output
* Efficiency to 89%
* 300/400KHz Switching Frequency
* 2:1 Input Range
* Regulated Outputs
* Continuous Short Circuit Protection
* Five-Sided Metal Case
* Half-Brick Size Meet Industrial Standard
* Safety Meets IEC/EN/UL60950-1
* UL60950-1 Approval



MODEL NUMBER	INPUT VOLTAGE	OUTPUT VOLTAGE	OUTPUT CURRENT		INPUT CURRENT		% EFF.	CAPACITOR LOAD MAX.
			MIN.	MAX.	NO LOAD	FULL LOAD		
CHB75-12S33	9 -18 VDC	3.3 VDC	0 mA	15 A	50 mA	5290 mA	78	10000uF
CHB75-12S05	9 -18 VDC	5 VDC	0 mA	15 A	50 mA	7530 mA	83	10000uF
CHB75-12S12	9 -18 VDC	12 VDC	0 mA	6.25 A	50 mA	7183 mA	87	10000uF
CHB75-12S15	9 -18 VDC	15 VDC	0 mA	5 A	50 mA	7267 mA	86	4000uF
CHB75-12S24	9 -18 VDC	24 VDC	0 mA	3.13 A	50 mA	7183 mA	87	2000uF
CHB75-24S33	18-36 VDC	3.3 VDC	0 mA	15 A	50 mA	2578 mA	80	10000uF
CHB75-24S05	18-36 VDC	5 VDC	0 mA	15 A	50 mA	3720 mA	84	10000uF
CHB75-24S12	18-36 VDC	12 VDC	0 mA	6.25 A	50 mA	3551 mA	88	10000uF
CHB75-24S15	18-36 VDC	15 VDC	0 mA	5 A	50 mA	3551 mA	88	4000uF
CHB75-24S24	18-36 VDC	24 VDC	0 mA	3.13 A	50 mA	3551 mA	88	2000uF
CHB75-48S33	36-75 VDC	3.3 VDC	0 mA	15 A	50 mA	1273 mA	81	10000uF
CHB75-48S05	36-75 VDC	5 VDC	0 mA	15 A	50 mA	1860 mA	84	10000uF
CHB75-48S12	36-75 VDC	12 VDC	0 mA	6.25 A	50 mA	1755 mA	89	10000uF
CHB75-48S15	36-75 VDC	15 VDC	0 mA	5 A	50 mA	1775 mA	88	4000uF
CHB75-48S24	36-75 VDC	24 VDC	0 mA	3.13 A	50 mA	1755 mA	89	2000uF

NOTE: 1. Nominal Input Voltage 12, 24 or 48VDC

SPECIFICATIONS

All Specifications Typical At Nominal Line, Full Load, and 25℃ Unless Otherwise Noted

INPUT SPECIFICATIONS:

Input Voltage Range ..... 12V 9-18V
24V 18-36V
48V 36-75V

Input Surge Voltage (100ms max.) ..... 12V ..... 25Vdc max.
24V ..... 50Vdc max.
48V ..... 100Vdc max.

Under Voltage Lockout:
12Vin ..... power up ..... 8.8V, power down 8V
24Vin ..... power up ..... 17V, power down 16V
48Vin ..... power up ..... 34V, power down 32.5V

Positive Logic Remote On/Off (note3&4)

Input Filter ..... Pi Type

OUTPUT SPECIFICATIONS:

Voltage Accuracy ..... ±1.0% max.
Transient Response:25% Step Load Change ..... <500μs
External Trim Adj. Range ..... ±10 %

Ripple & Noise, 20MHz BW(note5)
3.3V & 5V ..... 20mV RMS max.
75mV pk-pk max.
12V & 15V ..... 30mV RMS max.
100mV pk-pk max.
24V ..... 100mV RMS max.
240mV pk-pk max.

Temperature Coefficient ..... ±0.03%/°C max.
Short Circuit Protection ..... Continuous
Line Regulation (note1) ..... ±0.2% max.
Load Regulation (note2) ..... ±0.2% max.
Over Voltage Protection Trip Range, % Vo nom. 115-140%
Current Limit ..... 110% ~150% Nominal Output
Start up Time ..... 5ms typ.

GENRAL SPECIFICATIONS:

Efficiency ..... See Table
Isolation Voltage ..... Input/Output ..... 1500VDC min.
Input/Case ..... 1500VDC min.
Output/Case ..... 1500VDC min.
Isolation Resistance ..... 10^7 ohm min.
Isolation Capacitance ..... 1000pF typ.
Switching Frequency ..... (12/24)Vin ..... 400KHz typ.
48Vin ..... 300KHz typ.
Operating Case Temperature ..... -40℃ to 100℃
Storage Temperature ..... -55℃ to +105℃
Thermal Shutdown Case Temp. ..... 100℃ typ.
Humidity ..... 95% RH max. Non condensing
MTBF ..... MIL-HDBK-217F, GB, 25℃, Full Load ..... 1000Khrs typ.
Dimensions ..... 2.28×2.40x0.50 inches (57.9x61.0×12.7 mm)
Case Material ..... Aluminum
Weight 92g

NOTE:

1. Measured from high line to low line.
2. Measured from full load to zero load.
3. Logic compatibility ..... open collector ref to –Input
   Module on ..... open circuit
   Module off ..... 0 to < 0.8VDC
4. Suffix "N" to the model number with negative logic remote on/off.
5. Output ripple and noise measured with 10uF tantalum and 1uF ceramic capacitor across output.
6. Suffix "-C" to the model number with clear mounting Insert (3.2mm DIA.)
7. On/Off Pin is not directly applied voltage, please refer to remote on/off control circuit.

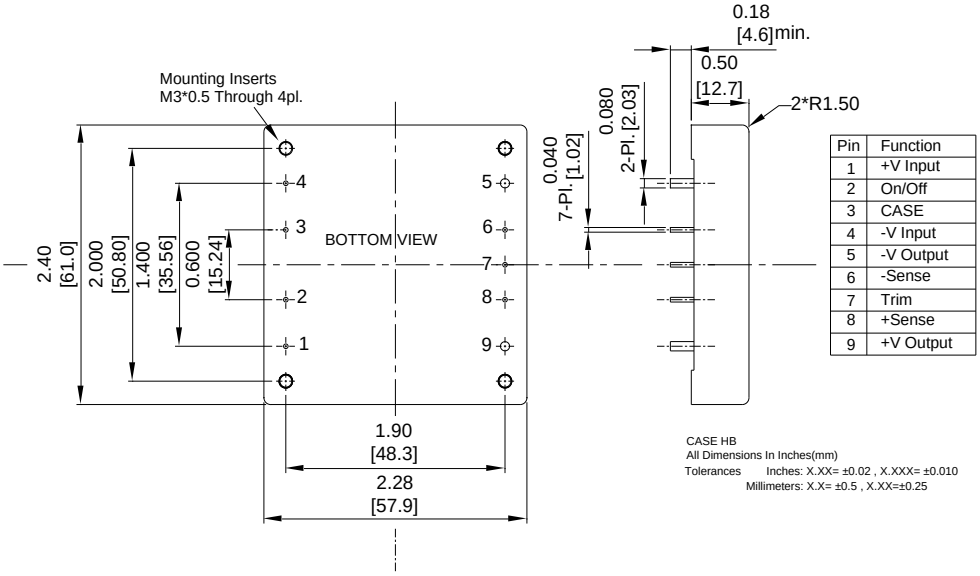

Pin	Function
1	+V Input
2	On/Off
3	CASE
4	-V Input
5	-V Output
6	-Sense
7	Trim
8	+Sense
9	+V Output

REMOTE ON/OFF CONTROL

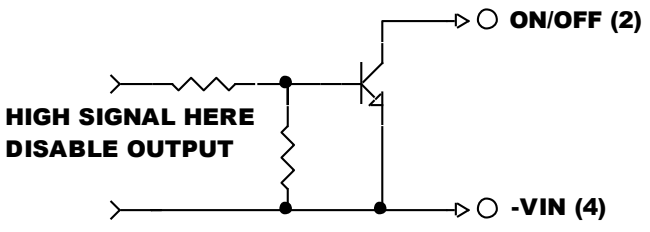

EXTERNAL OUTPUT TRIM

