# EC3AB SERIES
## 3 WATT 2:1 INPUT RANGE DC-DC CONVERTERS

E176177 H/HM Versions Only

## FEATURES

* 3W Isolated Output
* DIP-24/SMD Package
* Efficiency to 80%
* Regulated Outputs
* Pi Input Filter
* Continuous Short Circuit Protection
* Meets EN55032 Class B Conducted
* Remote On/Off (Option)
* Safety Meets IEC/EN/UL 62368-1

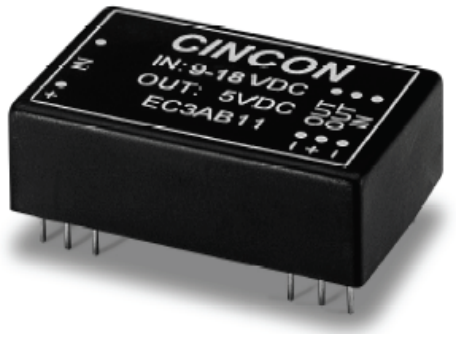


| MODEL NUMBER(1) | INPUT VOLTAGE(2) | OUTPUT VOLTAGE | OUTPUT CURRENT | INPUT CURRENT | | % EFF.(3) | CASE |
|---|---|---|---|---|---|---|---|
| | | | | NO LOAD | FULL LOAD | | |
| EC3AB11☐ | 9-18 VDC | 5 VDC | 600 mA | 7.5 mA | 329 mA | 76 | DIP-24 |
| EC3AB12☐ | 9-18 VDC | 12 VDC | 250 mA | 7.5 mA | 316 mA | 79 | DIP-24 |
| EC3AB13☐ | 9-18 VDC | 15 VDC | 200 mA | 7.5 mA | 321 mA | 78 | DIP-24 |
| EC3AB14☐ | 9-18 VDC | ±5 VDC | ±300 mA | 12 mA | 329 mA | 76 | DIP-24 |
| EC3AB15☐ | 9-18 VDC | ±12 VDC | ±125 mA | 12 mA | 325 mA | 77 | DIP-24 |
| EC3AB16☐ | 9-18 VDC | ±15 VDC | ±100 mA | 12 mA | 329 mA | 76 | DIP-24 |
| EC3AB17☐ | 9-18 VDC | 3.3 VDC | 600 mA | 7.5 mA | 229 mA | 72 | DIP-24 |
| EC3AB21☐ | 18-36 VDC | 5 VDC | 600 mA | 5 mA | 162 mA | 77 | DIP-24 |
| EC3AB22☐ | 18-36 VDC | 12 VDC | 250 mA | 5 mA | 156 mA | 80 | DIP-24 |
| EC3AB23☐ | 18-36 VDC | 15 VDC | 200 mA | 5 mA | 156 mA | 80 | DIP-24 |
| EC3AB24☐ | 18-36 VDC | ±5 VDC | ±300 mA | 7.5 mA | 164 mA | 76 | DIP-24 |
| EC3AB25☐ | 18-36 VDC | ±12 VDC | ±125 mA | 7.5 mA | 156 mA | 80 | DIP-24 |
| EC3AB26☐ | 18-36 VDC | ±15 VDC | ±100 mA | 7.5 mA | 162 mA | 77 | DIP-24 |
| EC3AB27☐ | 18-36 VDC | 3.3 VDC | 600 mA | 5 mA | 111 mA | 74 | DIP-24 |
| EC3AB31☐ | 36-72 VDC | 5 VDC | 600 mA | 2 mA | 81 mA | 77 | DIP-24 |
| EC3AB32☐ | 36-72 VDC | 12 VDC | 250 mA | 2 mA | 81 mA | 77 | DIP-24 |
| EC3AB33☐ | 36-72 VDC | 15 VDC | 200 mA | 2 mA | 81 mA | 77 | DIP-24 |
| EC3AB34☐ | 36-72 VDC | ±5 VDC | ±300 mA | 3 mA | 80 mA | 78 | DIP-24 |
| EC3AB35☐ | 36-72 VDC | ±12 VDC | ±125 mA | 3 mA | 82 mA | 76 | DIP-24 |
| EC3AB36☐ | 36-72 VDC | ±15 VDC | ±100 mA | 3 mA | 82 mA | 76 | DIP-24 |
| EC3AB37☐ | 36-72 VDC | 3.3 VDC | 600 mA | 3 mA | 58 mA | 71 | DIP-24 |

NOTE:

1. ☐ Can be None, M, H, HM, MS, HMS, HT, HMT or HMTS.
2. Nominal Input Voltage 12, 24 or 48 VDC
3. Typical Value at Nominal Input Voltage and Full Load

# SPECIFICATIONS

All Specifications Typical at Nominal Line, Full Load, and 25℃ Unless Otherwise Noted

## INPUT SPECIFICATIONS:

Input Voltage Range ..... 12V ..... 9-18V
24V ..... 18-36V
48V ..... 36-72V

Positive Logic Remote On/Off (See note6)

Input Filter ..... Pi Type

## OUTPUT SPECIFICATIONS:

Voltage Accuracy ..... ±2.0% max.
Voltage Balance (Dual) ..... ±1.0% max.
Temperature Coefficient ..... ±0.05%/℃ max.
Ripple & Noise, 20MHz BW ..... 3.3V/5V ..... 100mV pk-pk max.
12V/15V ..... 1% pk-pk max.
Short Circuit Protection ..... Continuous
Line Regulation Single/Dual (note1) .....±0.5% max.
Load Regulation (note2) Single ..... ±0.5% max.
Dual (note3) ..... ±1.0% max.

## GENERAL SPECIFICATIONS:

Efficiency ..... See Table
Isolation Resistance ..... $10^9$ Ohm min.
Switching Frequency ..... 100KHz min.
Operating Ambient Temperature Range ..... -25℃ to +71℃
De-rating, Above 71℃ (Plastic Case) ..... Linearly to Zero Power at 95℃
De-rating, Above 71℃ (Copper Case) ..... Linearly to Zero Power at 100℃
Case Temperature (Plastic Case note8) ..... 95℃ max.
(Copper Case note8) ..... 100℃ max.
Cooling ..... Natural Convection
Storage Temperature Range ..... -40℃ to +100℃
EMI/RFI ..... Conductive EMI Meet EN55032 Class B
Dimensions ..... DIP ..... 1.25x0.80x0.50 inches (31.8x20.3×12.7 mm)
SMD ..... 1.25x0.80x0.55 inches (31.8x20.3×14.0 mm)

## ISOLATION VOLTAGE:

500 VDC min. ..... Standard Models
3K VDC min. (note4) ..... Suffix “H” Models
1.5K VDC min. ..... Suffix “HM” Models

## CASE MATERIAL:

Standard Models ..... Non-Conductive Black Plastic
Suffix “M” Models ..... Black Coated Copper with Non-Conductive Base

## NOTE:

1. Measured from high line to low line.
2. Measured from full load to 10% load.
3. Measured from full load to 1/4 load.
4. Non-conductive black plastic only.
5. Suffix “T” to the model number with remote on/off for “H”/”HM” versions only.
6. Logic Compatibility .... CMOS or open collector TTL, ref. to -Vin
   Module on ..... >5.5VDC or open circuit
   Module off ..... 0 to <1.8Vdc
   Shutdown idle ..... 10mA
   Control common ..... referenced to input minus
7. Suffix “S” to the model number with SMD packages.
8. Maximum case temperature under any operating condition should not be exceeded 95℃ (plastic case),100℃ (copper case).

Typical Derating curve for Natural Convection

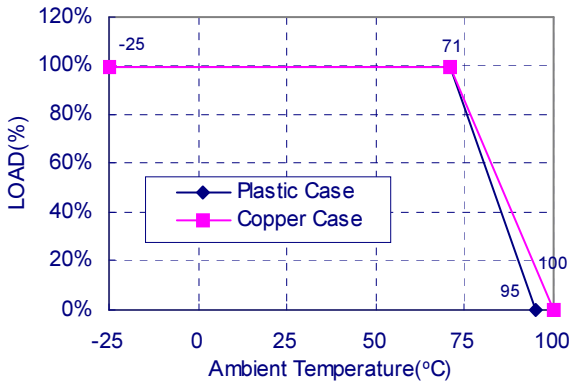


## Case A Dimensions:

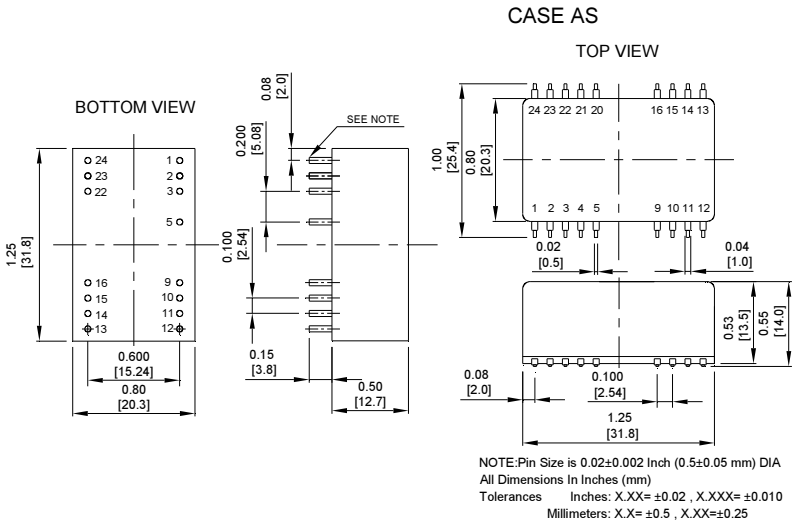


NOTE:Pin Size is 0.02±0.002 Inch (0.5±0.05 mm) DIA
All Dimensions In Inches (mm)
Tolerances Inches: X.XX= ±0.02 , X.XXX= ±0.010
Millimeters: X.X= ±0.5 , X.XX=±0.25

PIN CONNECTION

| 500 VDC | | | | | 1.5K & 3K VDC | | | | |
|---|---|---|---|---|---|---|---|---|---|
| Pin | Single Output | | Dual Output | | Pin | Single Output | | Dual Output | |
| | DIP | SMD | DIP | SMD | | DIP | SMD | DIP | SMD |
| 1,24 | +V Input | | +V Input | | 1,24 | NP | NC | NP | NC |
| 2,23 | NC | | -V Output | | 2,3 | -V Input | | -V Input | |
| 3,22 | NC | | Common | | 4 | NP | NC | NP | NC |
| 4 | NP | NC | NP | NC | 5 | NP/ Remote On/Off | NC/ Remote On/Off | NP/ Remote On/Off | NC/ Remote On/Off |
| 5 | NP | NC | NP | NC | 9 | NC | | Common | |
| 9 | NP | NC | NP | NC | 10,15 | NC | | NC | |
| 10,15 | -V Output | | Common | | 11 | NC | | -V Output | |
| 11,14 | +V Output | | +V Output | | 12,13 | NP | NC | NP | NC |
| 12,13 | -V Input | | -V Input | | 14 | +V Output | | +V Output | |
| 16 | NP | NC | NP | NC | 16 | -V Output | | Common | |
| 20 | NP | NC | NP | NC | 20,21 | NP | NC | NP | NC |
| 21 | NP | NC | NP | NC | 22,23 | +V Input | | +V Input | |

* NC-NO CONNECTION WITH PIN
* NP-NO PIN
* Remote On/Off (Option)