SIPSMT05-12 SERIES
5 AMP
POL CONVERTERS

E176177

FEATURES

* Non-Isolated POL Converter
* SIP/SMT Package
* Output Current 5AMP
* Input Voltage Range 8.3 –14VDC
* Output Voltage Range 0.75-5VDC
* High Efficiency to 92%
* Over Temperature Protection
* Continuous Short Circuit Protection
* Remote On/Off Control
* UL/C-UL60950 Certified
* Safety Meets IEC/EN/UL 62368-1

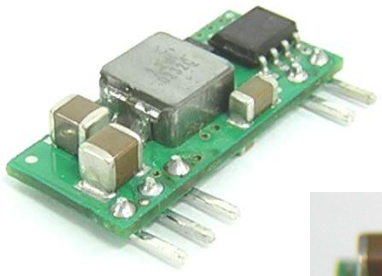

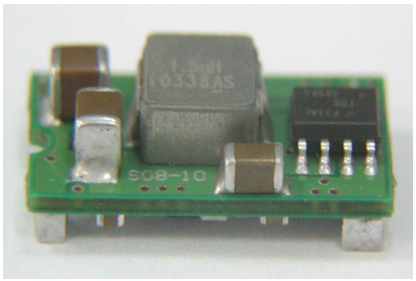

MODEL NUMBER	INPUT VOLTAGE	OUTPUT VOLTAGE	OUTPUT CURRENT	INPUT CURRENT		Efficiency (%)
				NO LOAD	FULL LOAD	
SIP05-12S05A SMT05-12S05A	8.3 – 14VDC	0.75VDC	5A	20mA	428mA	73
		1.2VDC	5A	25mA	625mA	80
		1.5VDC	5A	25mA	762mA	82
		1.8VDC	5A	30mA	893mA	84
		2.0VDC	5A	30mA	980mA	85
		2.5VDC	5A	35mA	1197mA	87
		3.3VDC	5A	45mA	1545mA	89
		5.0VDC	5A	50mA	2264mA	92

NOTE: Nominal Input Voltage 12VDC

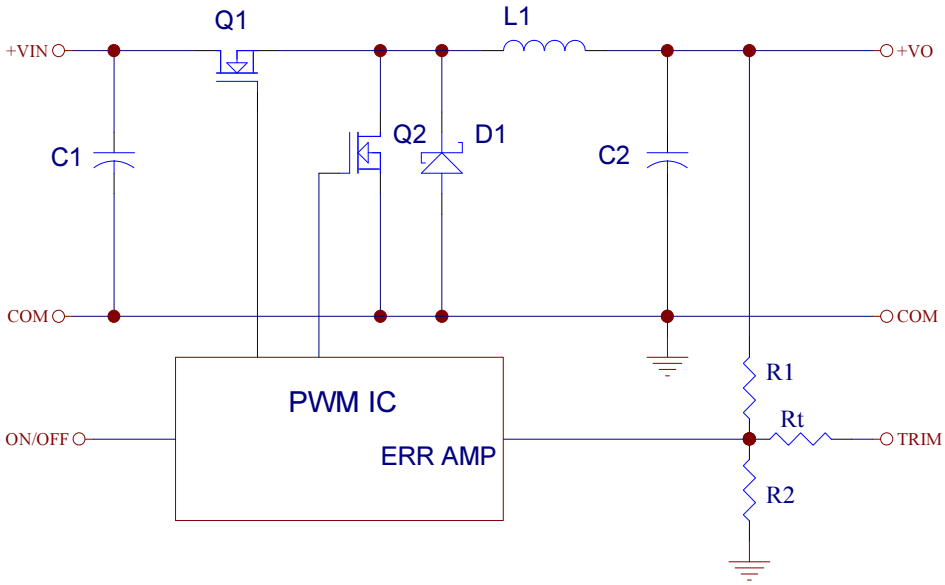

Vo,set (V)	Rtrim (KΩ)
0.75	Open
1.2	22.33
1.5	13.0
1.8	9.0
2.0	7.4
2.5	5.0
3.3	3.12
5.0	1.47

Table 1. External Resistor Values for programming output voltage

Figure 1. Simplified Schematic

SPECIFICATIONS

All Specifications Typical at Nominal Line, Full Load, and 25℃ Unless Otherwise Noted

INPUT SPECIFICATIONS:

Input Voltage Range ..... 12V ..... 8.3 – 14V
Under Voltage Lock-out ..... power up ..... 8.0V typ.
power down ..... 7.9V typ.
Input Filter Type ..... Capacitive
Positive Remote on/off Control:
Module On ..... Open Circuit or = Vin
Module Off ..... 0 to <0.4Vdc

OUTPUT SPECIFICATIONS:

Voltage Accuracy ..... ±1.5% max.
Transient Response: 50% Step Load Change ..... <200us
Ripple and Noise, 20MHz BW (note3) ..... 20mVrms, 50mVpk-pk max.
Vo=5Vdc ..... 45mVrms, 75mVpk-pk max.
Temperature Coefficient ..... ±0.03%/℃ max.
Short Circuit Protection ..... Continuous
Line Regulation (note1) ..... ±0.2% max.
Load Regulation (note2) ..... ±0.5% max.
Capacitive Load Low ESR ..... 3000uF max.
External Trim Adj. Range (See Table1) ..... Vo=0.75 – 5.0Vdc
Start up Time ..... 7ms typ.

GENERAL SPECIFICATIONS:

Efficiency ..... See Table
Isolation Voltage ..... Non-Isolation
Switching Frequency ..... 300KHz typ.
Over Temperature Protection ..... 120℃ typ.
Operating Ambient Temperature Range ..... -40℃ to +85℃
Power Derating Curve ..... See Figure2, 3
Storage Temperature Range ..... -55℃ to +125℃
MTBF ..... MIL-HDBK-217F, GB, 25℃, Full Load ..... 1.5Mhrs typ.
Dimensions: SIP Package: 0.90x0.400x0.22 inches (22.9x10.16x5.6mm)
SMT Package: 0.80x0.450x0.24 inches (20.3x11.43x6.09 mm)
Structure ..... Non-Potted with Open Frame Type
Weight 2.3g

NOTE:

1. Measured from high line to low line, Vo,set=1.8Vdc.
2. Measured from full load to zero load, Vo,set=3.3Vdc.
3. The output noise is measured with 10uF tantalum capacitor and 1uF ceramic capacitor across output.
4. The input terminal recommend to parallel with 100uF capacitor ESR<100Mω to reduce the input ripple voltage.
5. Suffix "N" to the model number with negative logic remote on/off
Model on ..... Open Circuit or 0 to < 0.4Vdc
Module off ..... >+2.8VDC to Vin

Dimensions:

SIP Packages

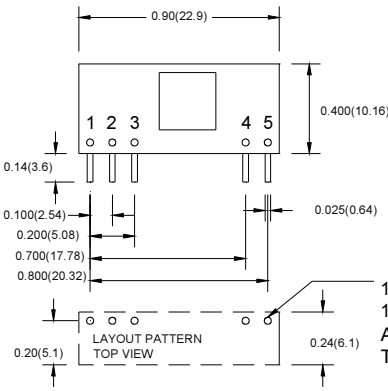

PIN CONNECTION	
Pin	FUNCTION
1	+Output
2	Trim
3	Common
4	+V Input
5	On/Off

1.1mm PLATED THROUGH HOLE
1.6mm PAD SIZE
All Dimmension In Inches(mm)
Tolerance :
.XX=± 0.02 (± 0.5)
.XXX=± 0.010 (± 0.25)

SMT Packages

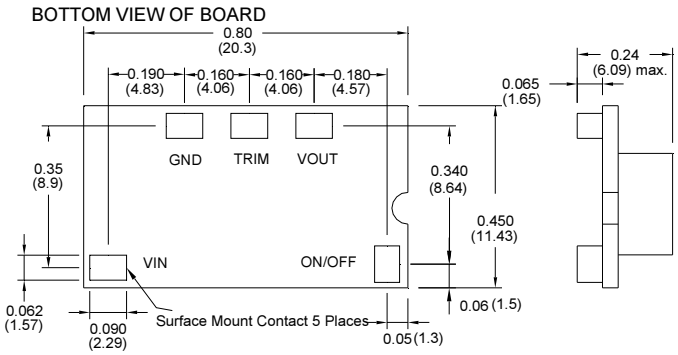

Dimensions are in Inches (millimeters)
Tolerances :x.xx ±0.02in.(x.x ±0.5mm) , unless otherwise noted
x.xxx ±0.010in. (x.xx ±0.25mm)

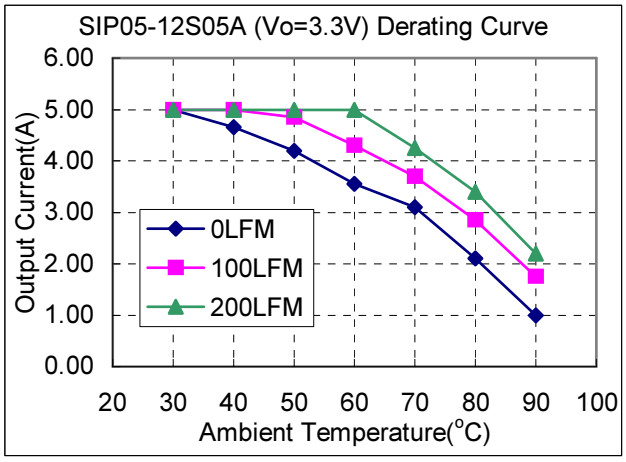

Figure2. Typical Power De-rating for 12V IN 3.3Vout

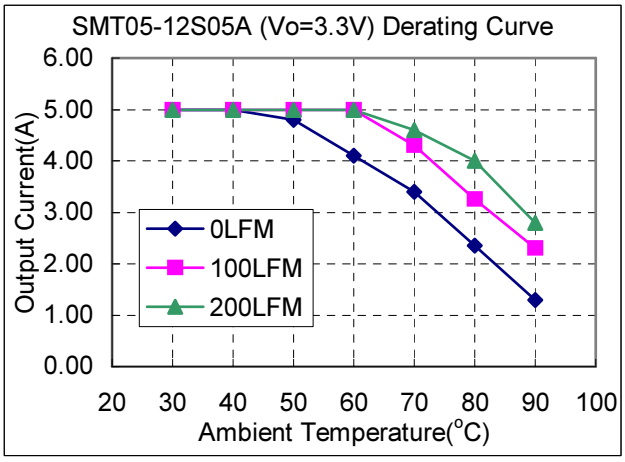

Figure3. Typical Power De-rating for 12V IN 3.3Vout