43 GHz BALANCED PHOTODETECTOR

BPDV21x0R

The BPDV21x0R consists of two optimized 43 GHz waveguide-integrated photodiodes on a single chip that show an extremely flat frequency response, both in power and in phase. Coherent's on-chip integrated bias network with an optimized RF design ensures an undisturbed frequency response from DC to the 3 dB cut-off frequency and saves costs for an external bias tee. The hermetic module is especially designed for use in the optical window at 1550 nm and optimal RF performance. The pulse response reveals virtually no ringing. It is best suited for test and measurement or microwave photonics applications up to 35 GHz. A further advantage of the waveguide structure is the unbeatable high-power behavior. The photodetector shows a linear response up to an optical input power of 10 dBm.
Tailored configurations are available, such as BPDV dual pair and quad sets, including connector customization and fiber-matching to enable coherent detection.

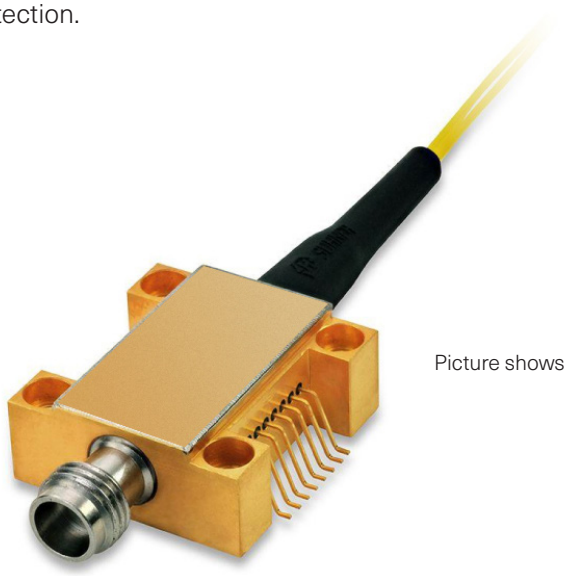

Picture shows product example, actual product might differ

FEATURES

- High 3 dB bandwidth of >40 GHz
- Optical window at 1550 nm
- Excellent linearity
- High responsivity of >0.5 A/W
- Low PDL of <0.5 dB

APPLICATIONS

- Optical Communication systems
- Advanced component R&D

COHERENT

Product Selection

BPDV21x0R-Vy-zz

x	2	= Standard version
	5	= Low PDL version
y	VF	= Female V® connector
	VM	= Male V® connector
zz	FP	= FC/PC connector (standard)
	FA	= FC/APC connector

Notes

Any trademarks used in this document are properties of their respective owners.
Coherent Incorporated reserves the right to make changes without notice.

Block Diagram

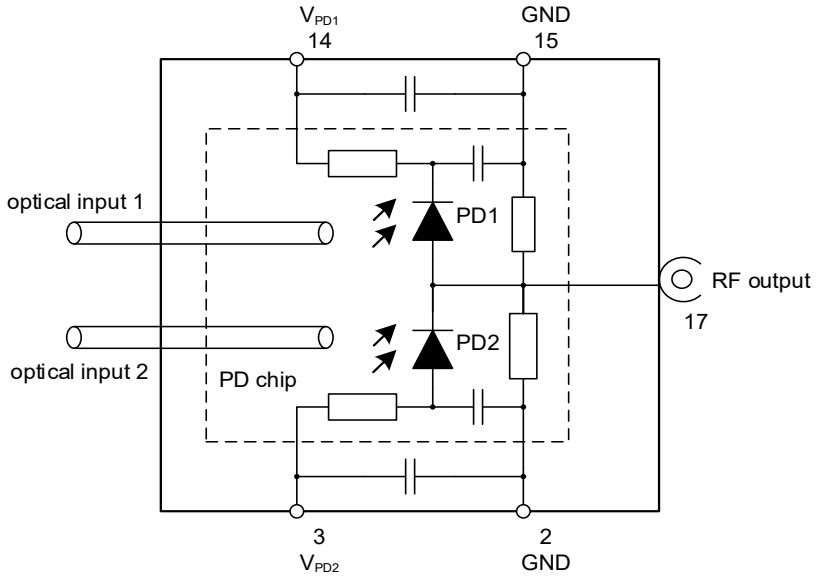

Key Specifications

Parameter	Symbol	Condition	Min.	Typ.	Max.	Unit
Operating Case Temperature	T_{CASE}		0		75	°C
Storage Temperature	T_{STORE}		-40		85	°C
Wavelength Range	λ	C-band	1525	1550	1575	nm
Photodiode Supply Voltage	V_{PD}		2.0	2.8	3.3	V
Average Optical Input Power	P_{OPT_avg}				13	dBm
Photodiode DC Responsivity	R	optimum polarization	0.4			A/W
Polarization-Dependent Loss	PDL	BPDV2120R BPDV2150R		0.4 0.2		
Imbalance of Responsivity	Imb	Imb= |10*log10(R_{PD1}/R_{PD2})|		0.15	0.5	dB
Photodiode Dark Current	I_{DARK}	T_{CASE} = 25 °C		±5		nA
3 dB Cut-off Frequency	f_{3dB}	C-band	37	42		GHz
Output Reflection Coefficient	s_{22}				-3	dB
Skew					2	ps

O/E Bandwidth Log Magnitude Plot

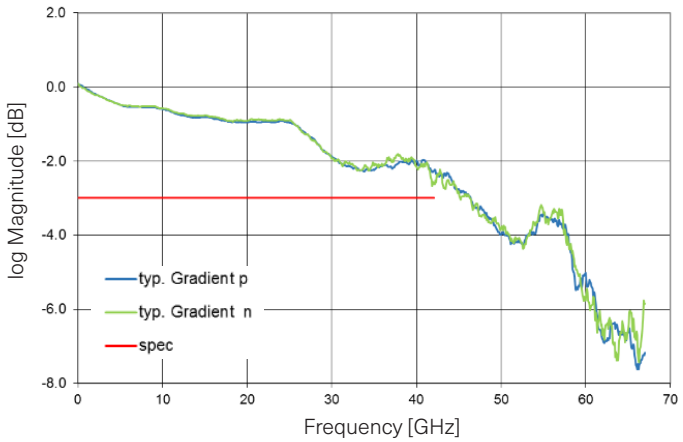

Typical frequency response s_{21}

S22 Log Magnitude Plot

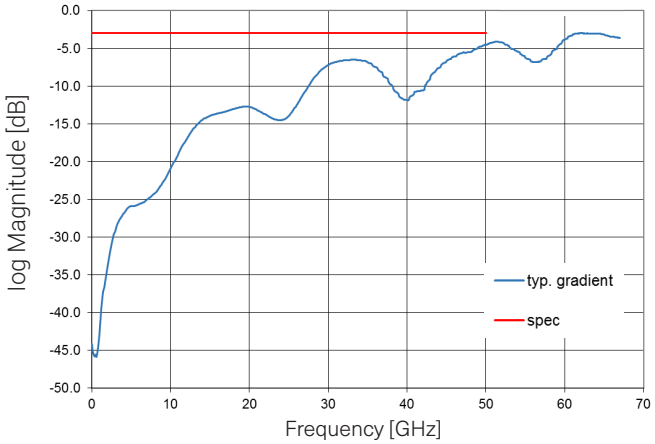

Typica backreflectionl s_{22}

© 2023 Coherent Corp.
Legal notices : coherent.com/legal
sales@coherent.com
www.coherent.com