Finisar

Preliminary Product Specification

High Powered 860nm VCSELs

HVS7000-001

PRODUCT FEATURES

- 10's of Watts of Peak Power
- Intended for pulsed applications
- Pulse widths of <10ns
- Duty Cycle <1%
- Gaussian Beam profile
- Narrow Beam Divergence
- Stable wavelength over Temperature
- High Efficiency



APPLICATIONS

- Gesture Recognition
- 3D IR Imaging

Finisar has developed a 2D VCSEL array TO based component that is specifically targeted towards use in gesture recognition and 3D camera applications. This specific product is packaged in a TO-46 can with a 2D VCSEL that is capable of delivering more than 500mW of CW power at room temperature. The intended use is with short electrical pulses (<10ns) and low duty cycle (<1%) where peak powers can reach 10W. In pulsed operation, the 2D array emits a Gaussian shaped optical beam and is capable of rise and fall times less than 1ns. Refer to Finisar application note AN-2109 entitled "High Power VCSELs for Gesture Recognition" for more information.

PRODUCT SELECTION

Part Number	Description
HVS7000-001	High power 860nm VCSEL in TO-46 Can

Confidential and Proprietary © 2014 Finisar Corporation. All rights reserved

I. Absolute Maximum Ratings

Parameter	Rating
Storage Temperature	-40 to +85°C
Case Operating Temperature	-10 to +60°C
Lead Solder Temperature	260°C, 10 sec.
Reverse Voltage	5V
Max continuous forward current	1.75A
Max peak forward current (<100ns,DC<1%)	20A
ESD Exposure (Human Body Model)	500V

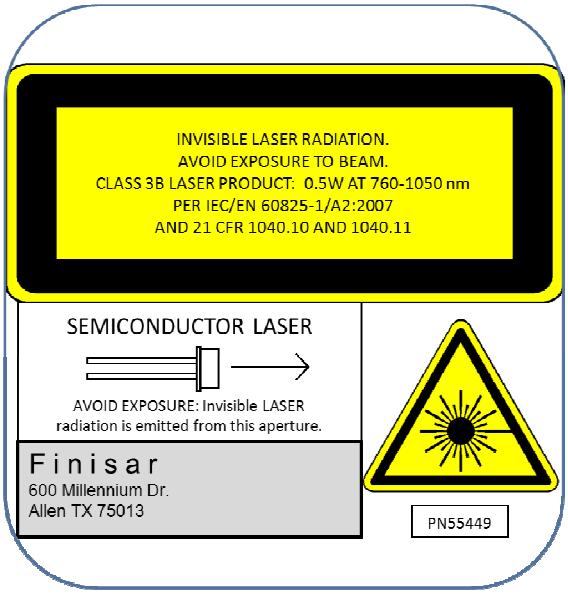

Notice

The inherent design of this component causes it to be sensitive to electrostatic discharge (ESD). To prevent ESD-induced damage and/or degradation to equipment, take normal ESD precautions when handling this product

Notice

Stresses greater than those listed under “Absolute Maximum Ratings” may cause permanent damage to the device. This is a stress rating only and functional operation of the device at these or any other conditions above those indicated in the operations section for extended periods of time may affect reliability.

Confidential and Proprietary © 2014 Finisar Corporation. All rights reserved

III. Electro-Optical Characteristics (T_{OP} = 25 °C)

VCSEL Parameters	Test Condition	Symbol	Min.	Typ.	Max.	Units	Notes
CW Optical Power	I_F = 1.5A	$P_{O,CW}$	500			mW	1
Peak Optical Power	I_{PULSE} = 10A, T_{PULSE} = 10ns, DC = 0.1%	$P_{O,PULSED}$	7			W	2
Threshold Current		I_{TH}		500		mA	
Slope Efficiency	I_F =1-1.5A;T_A = 25°C	η	0.8			mW/mA	3
Slope Efficiency Temperature variation	T_A = 0°C to 70°C	$\Delta\eta/\Delta T$		-3000		ppm/°C	4
Peak Wavelength	I_F = 1.5A,	λ_P	840	860	870	nm	
λ_P Temperature Variation	I_F = 1.5A,	$\Delta\lambda_P/\Delta T$		0.06		nm/°C	
Spectral Bandwidth, RMS	I_F = 1.5A	$\Delta\lambda$		0.25	1	nm	
Laser Forward Voltage	I_F = 1.5A				2.45	V	
Rise and Fall Times	I_F = 1.5A	t_r, t_f		1		ns	5
Series Resistance	I_F =1-1.5A;T_A = 25°C	R_S			1	Ω	
Beam Divergence	I_{PULSE} = 10A, T_{PULSE} = 10ns, DC = 0.1%	θ	10	16	25	Degrees	6

Notes:

1. For the purpose of these tests, I_F is DC current. The TO can must be attached to a proper heat sink and held at 25C.
2. I_{PULSE} is defined as the peak current with a pulse width of T_{PULSE} and a duty cycle (DC) defined as the ratio of pulse width to pulse repetition time. For a 10ns pulse, the pulse interval is 10us for a 0.1% DC.
3. Slope efficiency is defined as $\Delta P_O/\Delta I_F$.
4. To compute the value of Slope Efficiency at a temperature T, use the following equation:
   $\eta(T) \approx \eta(25^oC)*[1+(\Delta\eta/\Delta T)*(T-25)]$
5. Rise and fall times specifications are the 20% - 80%. Rise and fall times are sensitive to drive electronics and a small prebias current (~10mA) may be needed for optimal performance.
6. Beam divergence is defined as the total included angle between the $1/e^2$ intensity points

Confidential and Proprietary © 2014 Finisar Corporation. All rights reserved

IV. Typical Performance Curves

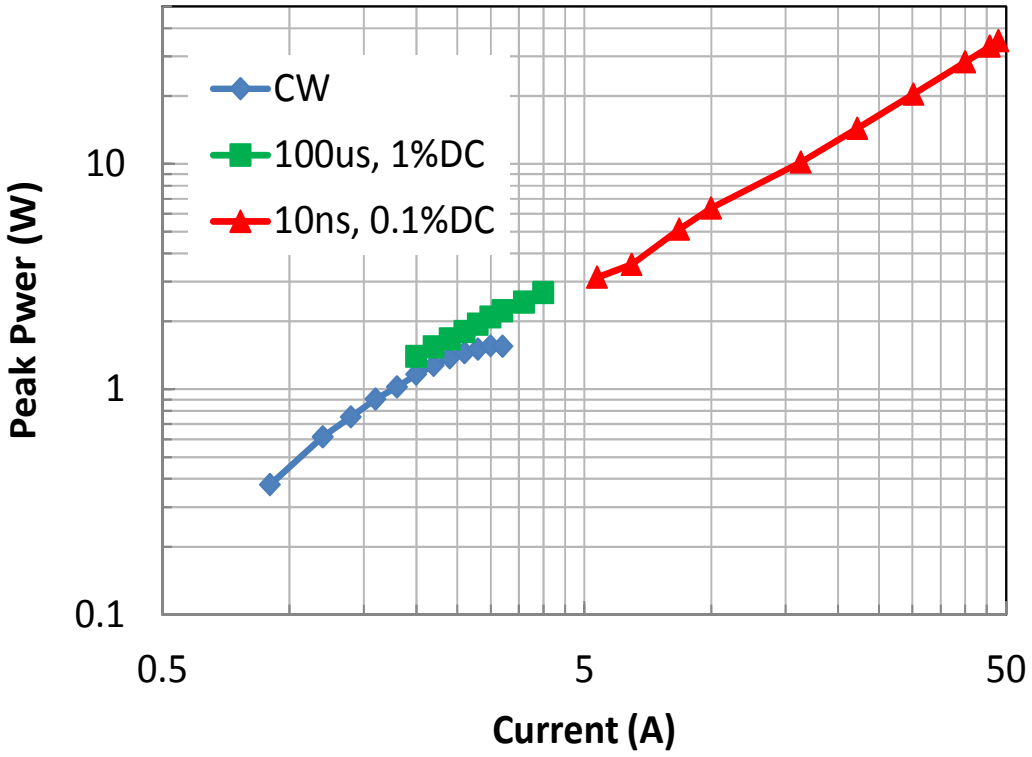

VI. Environmental Specifications

Parameter	Symbol	Min	Typ	Max	Units	Ref.
Case Operating Temperature	T_{op}	-10		60	°C	
Storage Temperature	T_{sto}	-40		85	°C	

VII. Regulatory Compliance

Feature	Agency	Standard	Certificate Number
Laser Eye Safety	FDA/CDRH	CDRH 21 CFR 1040 and Laser Notice 50	9521487

Copies of the referenced certificates are available at Finisar Corporation upon request.

IX. Mechanical Specifications

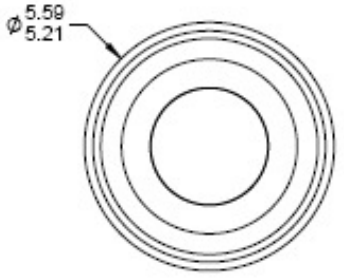

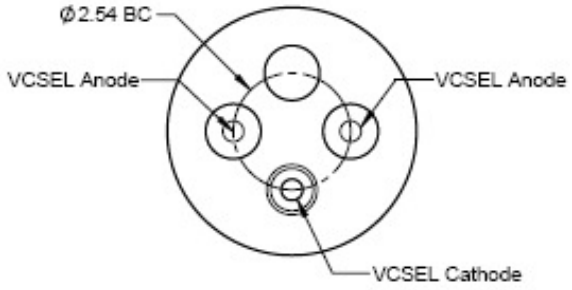

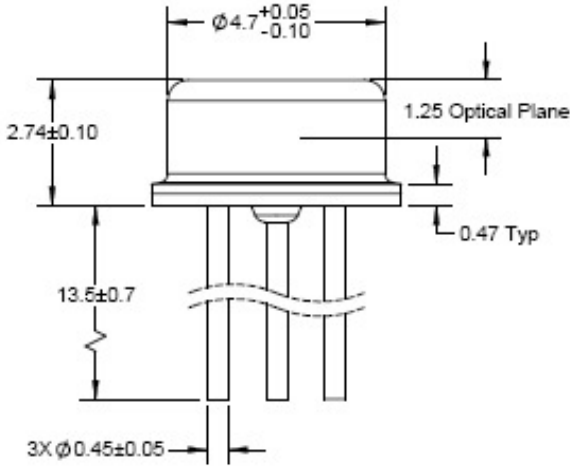

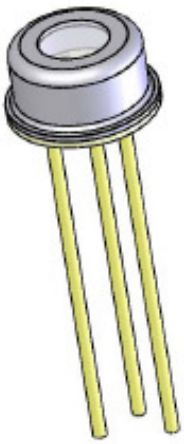

XII. Revision History

Revision	Date	Description
A1	12/10/2012	• Preliminary Document created.
B00	10/30/2014	• Modified performance specs with recent data

XII. For More Information

Finisar Corporation
1389 Moffett Park Drive
Sunnyvale, CA 94089-1133
Tel. 1-408-548-1000
Fax 1-408-541-6138
sales@finisar.com
www.finisar.com