3KP-HF Series

Stand-off Voltage: 5.0 ~ 440V
Power Dissipation: 3000 Watts
RoHS Device
Halogen Free

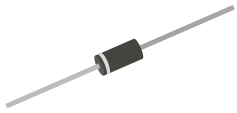

Features

- Glass passivated chip.
- Low leakage.
- Uni and Bidirection unit.
- Excellent clamping capability.
- Very Fast response time.

Mechanical Data

- Case: Molded plastic, R-6
- Epoxy: UL 94V-0 rate flame retardant.
- Lead: Solderable per MIL-STD-202, method 208 guranteed.
- Polarity: Color band denotes cathode end except Bipolar.
- Weight: 2.1 grams(approx.).

R-6

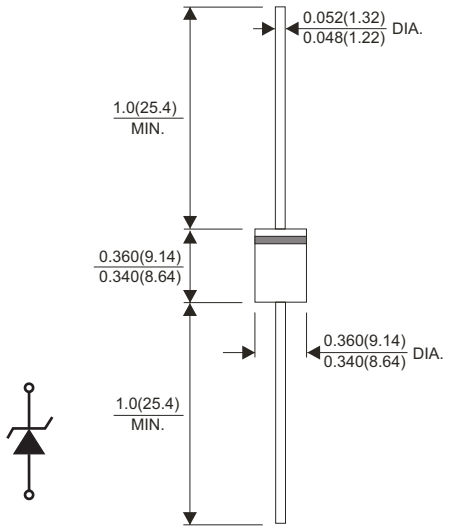

Dimensions in inches and (millimeter)

Maximum Ratings and Electrical Characteristics

Rating at 25°C ambient temperature unless otherwise specified.
Single phase, half wave, 60Hz, resistive or inductive loaded.
For capacitive load, derated current by 20%.

Parameter	Symbol	Value	Unit
Peak power dissipation with a 10/1000 μs waveform (Note 1)	P_{PP}	3000	W
Peak pulse current wih a 10/1000 μs waveform (Note 1)	I_{PP}	See Next Table	A
Power dissipation on infinite heatsink at T_L=75°C	P_D	6.5	W
Peak forward surge current, 8.3mS single half sine-wave unidirectional only (Note 2)	I_{FSM}	300	A
Maximum instantaneous forward voltage at 100A for unidirectional only (Note 3)	V_F	3.5 / 5.0	V
Operating junction and storage temperature range	T_J, T_{STG}	-55 to +150	°C

NTOES:
(1) Non-repetitive current pulse, per fig.3 and derated above T_A=25°C per Fig. 1.
(2) Measured on 8.3 ms single half sine-wave or equivalent square wave, duty cycle = 4 pulses per minute maximum.
(3) V_F<3.5V for devices of V_{BR}<200V and V_F<5.0V for devices of V_{BR}>201V.

RATING AND CHARACTERISTIC (3KP-HF Series)

Fig.1 Pulse Derating Curve

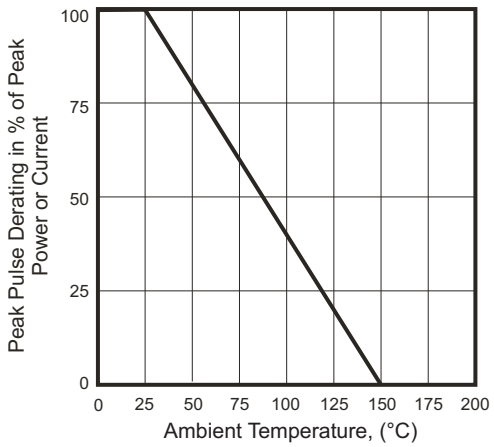

Fig.2 Max. Non-repetitive Surge Current

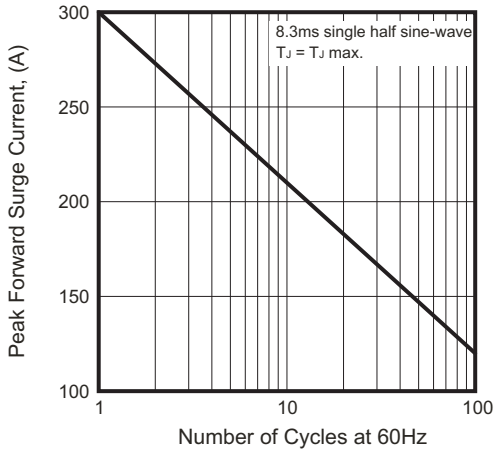

Fig.3 Peak Pulse Power Rating Curve

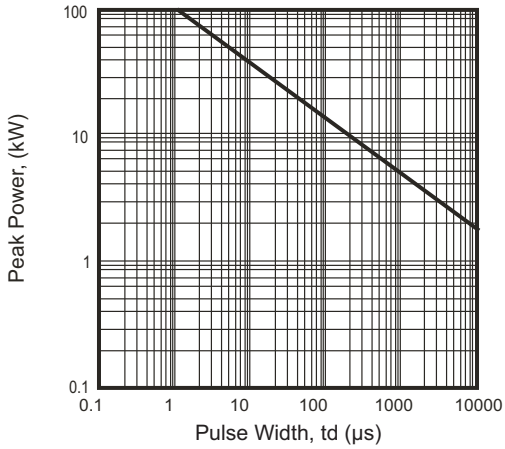

Fig.4 Steady State Power Derating Curve

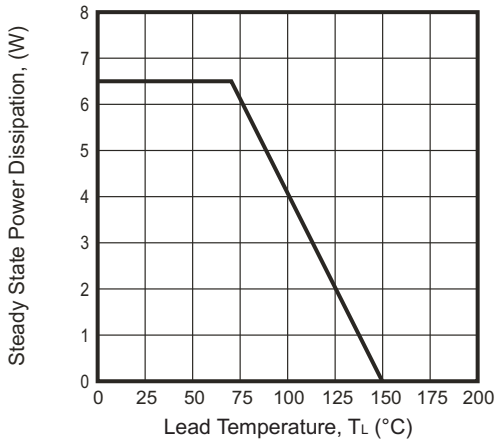

Fig.5 Pulse Waveforem

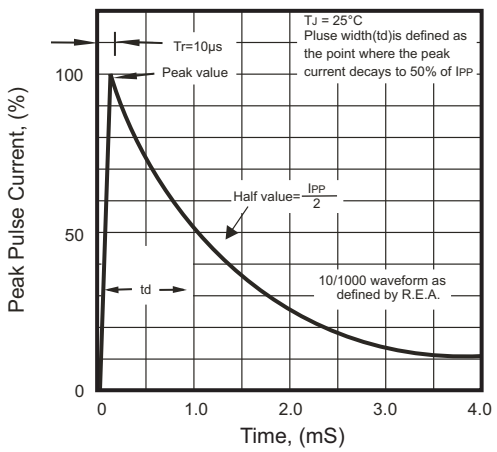

Company reserves the right to improve product design , functions and reliability without notice.

Electrical Characteristics (T_A=25°C unless otherwise noted)

Part No.	Breakdown Voltage VBR (V) @ IT			Maximum Reverse Leakage at VRWM I_R (uA)	Working Peak Reverse Voltage V_{RWM} (V)	Maximum Reverse Surge Current I_{PP}(A)	Maximum Clamping Voltage at IPP Vc(V)	Marking Code	
	MIN.(V)	MAX.(V)	IT(mA)					UNI	BI
3KP5.0(C)A-HF	6.40	7.00	50	5000	5.0	326.09	9.2	3KP5.0A	3KP5.0CA
3KP6.0(C)A-HF	6.67	7.37	50	5000	6.0	291.26	10.3	3KP6.0A	3KP6.0CA
3KP6.5(C)A-HF	7.22	7.98	50	2000	6.5	267.86	11.2	3KP6.5A	3KP6.5CA
3KP7.0(C)A-HF	7.78	8.60	50	1000	7.0	250.00	12.0	3KP7.0A	3KP7.0CA
3KP7.5(C)A-HF	8.33	9.21	5	250	7.5	232.56	12.9	3KP7.5A	3KP7.5CA
3KP8.0(C)A-HF	8.89	9.83	5	150	8.0	220.59	13.6	3KP8.0A	3KP8.0CA
3KP8.5(C)A-HF	9.44	10.4	5	50	8.5	208.33	14.4	3KP8.5A	3KP8.5CA
3KP9.0(C)A-HF	10.0	11.1	5	20	9.0	194.81	15.4	3KP9.0A	3KP9.0CA
3KP10(C)A-HF	11.1	12.3	5	15	10.0	176.47	17.0	3KP10A	3KP10CA
3KP11(C)A-HF	12.2	13.5	5	2	11.0	164.84	18.2	3KP11A	3KP11CA
3KP12(C)A-HF	13.3	14.7	5	2	12.0	150.75	19.9	3KP12A	3KP12CA
3KP13(C)A-HF	14.4	15.9	5	2	13.0	139.53	21.5	3KP13A	3KP13CA
3KP14(C)A-HF	15.6	17.2	5	2	14.0	129.31	23.2	3KP14A	3KP14CA
3KP15(C)A-HF	16.7	18.5	5	2	15.0	122.95	24.4	3KP15A	3KP15CA
3KP16(C)A-HF	17.8	19.7	5	2	16.0	115.38	26.0	3KP16A	3KP16CA
3KP17(C)A-HF	18.9	20.9	5	2	17.0	108.70	27.6	3KP17A	3KP17CA
3KP18(C)A-HF	20.0	22.1	5	2	18.0	102.74	29.2	3KP18A	3KP18CA
3KP19(C)A-HF	21.1	23.3	5	2	19.0	97.47	30.8	3KP19A	3KP19CA
3KP20(C)A-HF	22.2	24.5	5	2	20.0	92.59	32.4	3KP20A	3KP20CA
3KP22(C)A-HF	24.4	26.9	5	2	22.0	84.51	35.5	3KP22A	3KP22CA
3KP24(C)A-HF	26.7	29.5	5	2	24.0	77.12	38.9	3KP24A	3KP24CA
3KP26(C)A-HF	28.9	31.9	5	2	26.0	71.26	42.1	3KP26A	3KP26CA
3KP28(C)A-HF	31.1	34.4	5	2	28.0	66.08	45.4	3KP28A	3KP28CA
3KP30(C)A-HF	33.3	36.8	5	2	30.0	61.98	48.4	3KP30A	3KP30CA
3KP33(C)A-HF	36.7	40.6	5	2	33.0	56.29	53.3	3KP33A	3KP33CA
3KP36(C)A-HF	40.0	44.2	5	2	36.0	51.64	58.1	3KP36A	3KP36CA
3KP40(C)A-HF	44.4	49.1	5	2	40.0	46.51	64.5	3KP40A	3KP40CA
3KP43(C)A-HF	43.0	47.8	5	2	43.0	43.23	69.4	3KP43A	3KP43CA
3KP45(C)A-HF	50.0	55.3	5	2	45.0	41.27	72.7	3KP45A	3KP45CA
3KP48(C)A-HF	53.3	58.9	5	2	48.0	38.76	77.4	3KP48A	3KP48CA
3KP51(C)A-HF	56.7	62.7	5	2	51.0	36.41	82.4	3KP51A	3KP51CA
3KP54(C)A-HF	60.0	66.3	5	2	54.0	34.44	87.1	3KP54A	3KP54CA

Electrical Characteristics (T_A=25°C unless otherwise noted)

Part No.	Breakdown Voltage VBR (V) @ IT			Maximum Reverse Leakage at VRWM I_R (uA)	Working Peak Reverse Voltage V_{RWM} (V)	Maximum Reverse Surge Current I_{PP}(A)	Maximum Clamping Voltage at IPP Vc(V)	Marking Code	
	MIN.(V)	MAX.(V)	IT(mA)					UNI	BI
3KP58(C)A-HF	64.4	71.2	5	2	58.0	32.05	93.6	3KP58A	3KP58CA
3KP60(C)A-HF	66.7	73.7	5	2	60.0	30.99	96.8	3KP60A	3KP60CA
3KP64(C)A-HF	71.1	78.6	5	2	64.0	29.13	103.0	3KP64A	3KP64CA
3KP70(C)A-HF	77.8	86.0	5	2	70.0	26.55	113.0	3KP70A	3KP70CA
3KP75(C)A-HF	83.3	92.1	5	2	75.0	24.79	121.0	3KP75A	3KP75CA
3KP78(C)A-HF	86.7	95.8	5	2	78.0	23.81	126.0	3KP78A	3KP78CA
3KP80(C)A-HF	88.8	97.6	5	2	80.0	23.15	137.0	3KP80A	3KP80CA
3KP85(C)A-HF	94.4	104.0	5	2	85.0	21.9	137.0	3KP85A	3KP85CA
3KP90(C)A-HF	100	111	5	2	90	20.55	146	3KP90A	3KP90CA
3KP100(C)A-HF	111	123	5	2	100	18.52	162	3KP100A	3KP100CA
3KP110(C)A-HF	122	135	5	2	110	16.95	177	3KP110A	3KP110CA
3KP120(C)A-HF	133	147	5	2	120	15.54	193	3KP120A	3KP120CA
3KP130(C)A-HF	144	159	5	2	130	14.35	209	3KP130A	3KP130CA
3KP140(C)A-HF	155	171	5	2	140	13.23	227	3KP140A	3KP140CA
3KP150(C)A-HF	167	185	5	2	150	12.35	243	3KP150A	3KP150CA
3KP160(C)A-HF	178	197	5	2	160	11.58	259	3KP160A	3KP160CA
3KP170(C)A-HF	189	209	5	2	170	10.91	275	3KP170A	3KP170CA
3KP180(C)A-HF	200	220	5	2	180	10.29	292	3KP180A	3KP180CA
3KP190(C)A-HF	211	232	5	2	190	9.75	308	3KP190A	3KP190CA
3KP200(C)A-HF	224	247	5	2	200	9.26	324	3KP200A	3KP200CA
3KP210(C)A-HF	233	258	5	2	210	8.58	350	3KP210A	3KP210CA
3KP220(C)A-HF	246	272	5	2	220	8.43	356	3KP220A	3KP220CA
3KP250(C)A-HF	279	309	5	2	250	7.41	405	3KP250A	3KP250CA
3KP300(C)A-HF	335	371	5	2	300	6.17	486	3KP300A	3KP300CA
3KP350(C)A-HF	391	432	5	2	350	5.29	567	3KP350A	3KP350CA
3KP400(C)A-HF	447	494	5	2	400	4.63	648	3KP400A	3KP400CA
3KP440(C)A-HF	492	543	5	2	440	4.21	713	3KP440A	3KP440CA

NOTES:

1. Suffix 'A ' denotes 5% tolerance device.
2. Add suffix 'C 'or ' CA ' after part number to specify Bi-directional devices.
3. For Bi-Directional devices having V_R of 10 volts and under, the I_R limit is double.

Company reserves the right to improve product design , functions and reliability without notice.

Taping Specification For Axial Lead Diodes

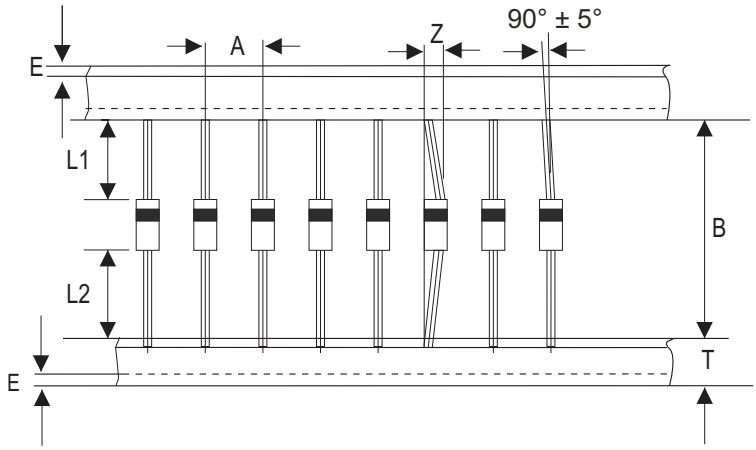

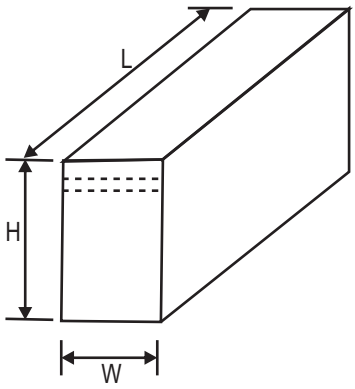

	SYMBOL	A	B	Z	T	E
R-6	(mm)	10.00 ± 0.50	52.40 ± 1.50	1.60 (max)	6.00 ± 0.40	3.00 (max)
	(inch)	0.394 ± 0.020	2.063 ± 0.059	0.063 (max)	0.236 ± 0.016	0.118 (max)

	SYMBOL	$\|L_1-L_2\|$	L	W	H
R-6	(mm)	1.00 (max)	260 ± 5.00	75 ± 5.00	145 ± 5.00
	(inch)	0.039 (max)	10.236 ± 0.197	2.953 ± 0.197	5.709 ± 0.197

Standard Packaging

Case Type	AMMO PACK	
	BOX (pcs)	CARTON (pcs)
R-6	250	3,750

Company reserves the right to improve product design , functions and reliability without notice.