SMD Super Fast Recovery Rectifiers

AMUR1020DC-HF Thru. AMUR1060DC-HF

Reverse Voltage: 200 to 600 V
Forward Current: 10 A
RoHS Device
Halogen Free

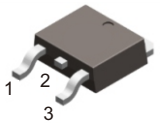

Features

- Low cost.
- Low leakage.
- Low forward voltage drop.
- High current capability.
- AEC-Q101 Qualified.

Mechanical data

- Case: TO-252, molded plastic.
- Mounting position: Any.

Circuit Diagram

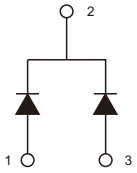

TO-252

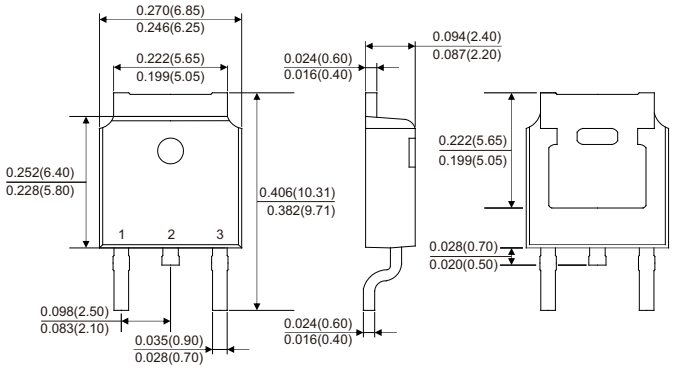

Dimensions in inches and (millimeters)

Maximum Ratings and Electrical Characteristics (at T_A=25°C unless otherwise specified)

Parameter	Symbols	AMUR1020DC -HF	AMUR1030DC -HF	AMUR1040DC -HF	AMUR1060DC -HF	Units
Recurrent peak reverse voltage	V_{RRM}	200	300	400	600	V
RMS voltage	V_{RMS}	140	210	280	420	V
DC blocking voltage	V_{DC}	200	300	400	600	V
Average forward rectified current @ T_A = 100°C	$I_{F(AV)}$	10				A
Peak forward surge current 8.3ms single half sine-wave superimposed on rated load	I_{FSM}	60				A
Max. forward voltage @ I_F = 5A	V_F	0.98	1.3		1.5	V
Max. reverse current $V_R = V_{RRM}$, T_A = 25°C $V_R = V_{RRM}$, T_A = 150°C	I_R	5.0 250	10 500			μA
Max. reverse recovery time @I_F = 0.5A, I_R = 1A, I_{rr} = 0.25A	t_{rr}	25	50			ns
Operating junction and storage temperature range	T_J, T_{STG}	-55 to +150				°C

Typical Rating and Characteristic Curves (MUR1020DC-HF Thru. MUR1060DC-HF)

Fig.1 - Typical Forward Characteristic

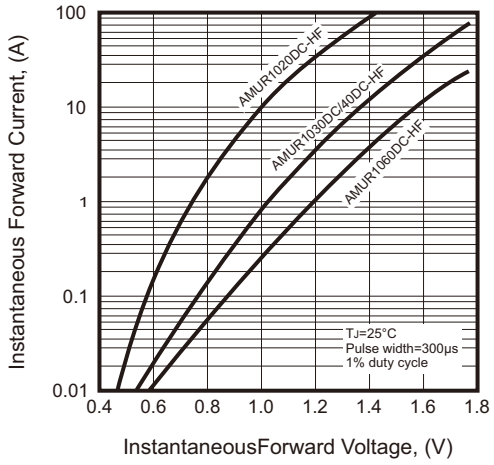

Fig.2 - Peak Forward Surge Current

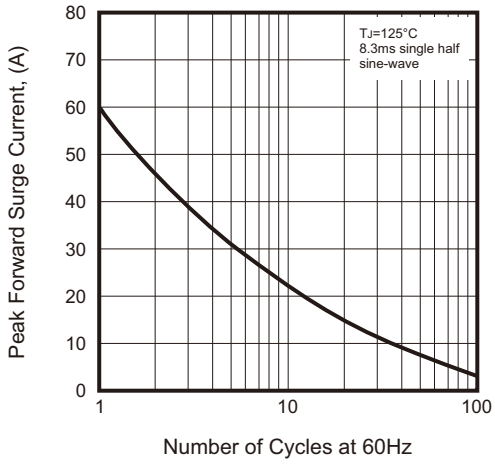

Fig.3 - Forward Derating Curve

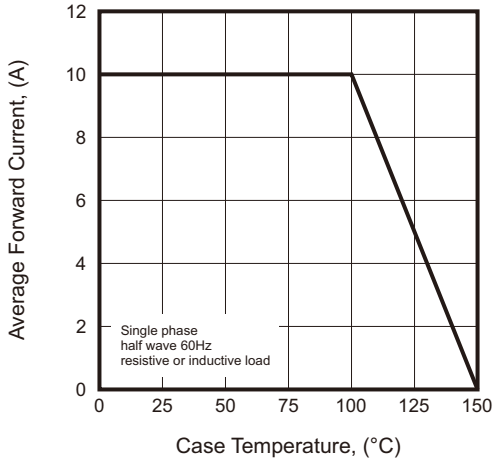

Reel Taping Specification

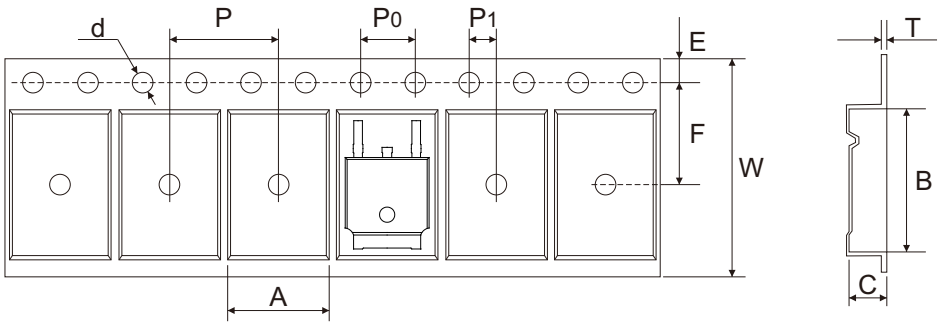

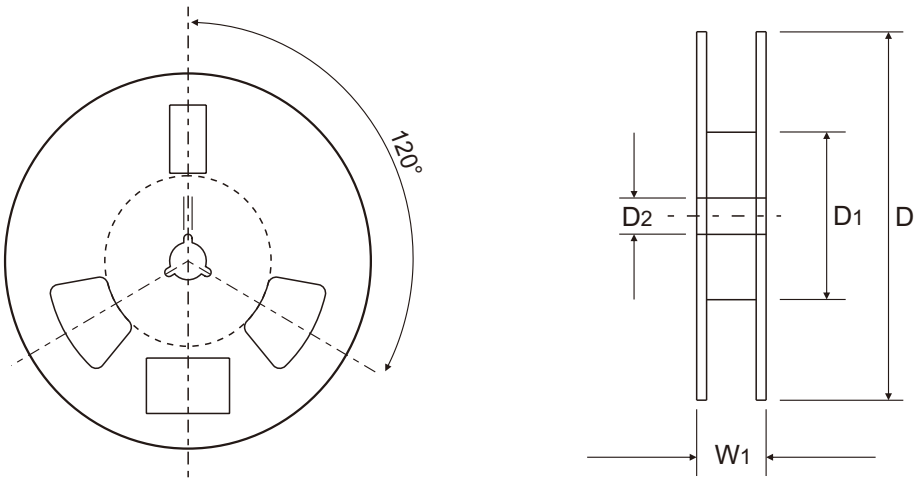

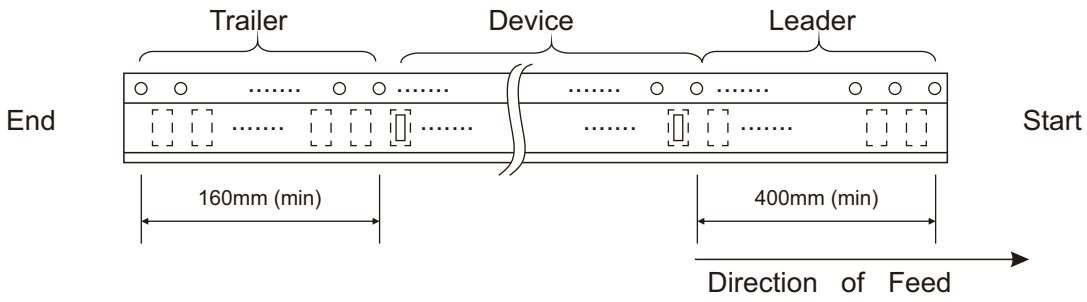

	SYMBOL	A	B	C	d	D	D_1	D_2
TO-252	(mm)	6.90 ± 0.10	10.50 ± 0.10	2.70 ± 0.10	1.50 + 0.25	330 ± 1.00	100 ± 1.00	13.00 ± 0.20
	(inch)	0.272 ± 0.004	0.413 ± 0.004	0.106 ± 0.004	0.059 + 0.010	12.992 ± 0.039	3.937 ± 0.039	0.512 ± 0.008

	SYMBOL	E	F	P	P_0	P_1	T	W	W_1
TO-252	(mm)	1.75 ± 0.10	7.50 ± 0.10	8.00 ± 0.10	4.00 ± 0.10	2.00 ± 0.10	0.30 ± 0.05	16.00 + 0.30 − 0.20	21.00 ± 0.30
	(inch)	0.069 ± 0.004	0.295 ± 0.004	0.315 ± 0.004	0.157 ± 0.004	0.079 ± 0.004	0.012 ± 0.002	0.630 + 0.012 − 0.008	0.827 ± 0.012

Marking Code

Part Number	Marking Code
AMUR1020DC-HF	MUR1020DC
AMUR1030DC-HF	MUR1030DC
AMUR1040DC-HF	MUR1040DC
AMUR1060DC-HF	MUR1060DC

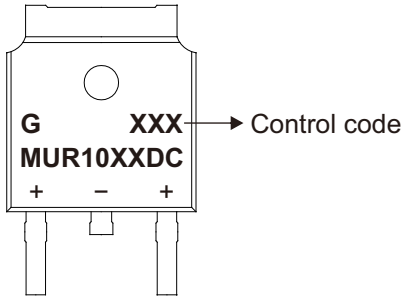

xx = Product type marking code

Suggested P.C.B. PAD Layout

SIZE	TO-252	
	(mm)	(inch)
A	1.80	0.071
B	2.70	0.106
C	1.50	0.059
D	2.30	0.091
E	6.40	0.252
F	6.80	0.268

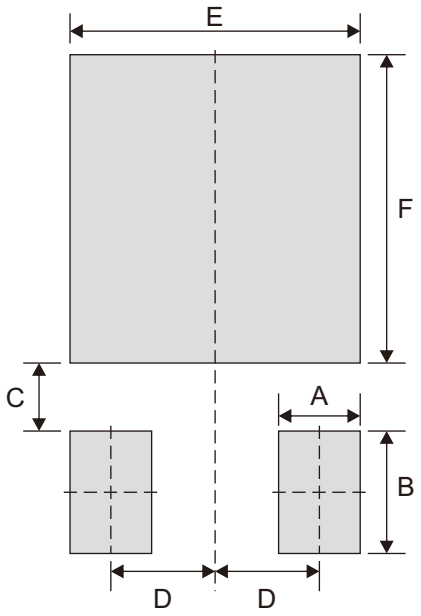

Standard Packaging

Case Type	REEL PACK	
	REEL (pcs)	Reel Size (inch)
TO-252	2,500	13