BAT54-HF Series

RoHS Device
Halogen Free

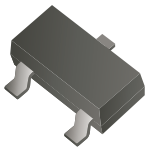

Features

- High current capability.
- Low forward voltage drop.
- Extremely fast switching speed.

Mechanical data

- Case: SOT-23, molded plastic.
- Epoxy : UL 94V-0.

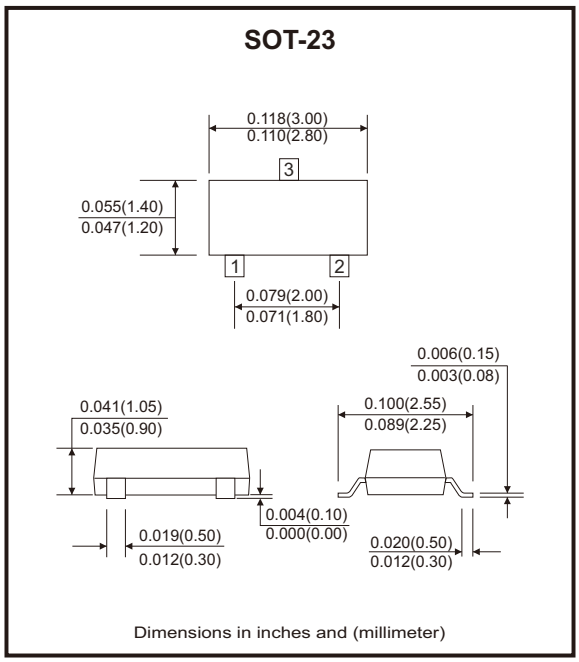

Circuit Diagram

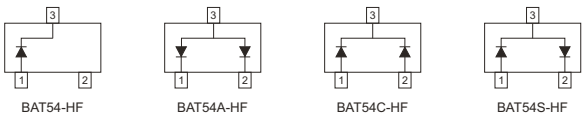

Maximum Rating (at Ta=25°C unless otherwise noted)

Parameter	Symbol	Value	Unit
Max. repetitive peak reverse voltage	V_{RRM}	30	V
Max. RMS voltage	V_{RMS}	21	V
Max. DC blocking voltage	V_{DC}	30	V
Max. average forward rectified current	I_{FM}	200	mA
Peak forward surge current 8.3 ms single half sine-wave	I_{FSM}	600	mA
Typical thermal resistance	$R_{\theta JA}$	500	°C/W
Power dissipation	P_D	200	mW
junction temperature	T_J	125	°C
Storage temperature range	T_{STG}	-50 to +150	°C

Company reserves the right to improve product design , functions and reliability without notice.

Electrical Characteristics (at Ta=25°C unless otherwise noted)

Parameter	Symbol	Conditions	Min.	Typ.	Max.	Unit
Maximum Forward voltage	V_{F1}	I_F=0.1mA			240	mV
	V_{F2}	I_F=1mA			320	
	V_{F3}	I_F=10mA			400	
	V_{F4}	I_F=30mA			500	
	V_{F5}	I_F=100mA			1000	
Maximum reverse breakdown voltage	V_R	I_R=100μA	30			V
Maximum reverse current	I_R	V_R=25V			2.0	μA
Type junction capacitance	C_j	V_R=1V, f=1MHz			10	pF
Reverse recovery time	t_{rr}	I_F=I_R=10mA, I_{RR}=0.1xI_R, R_L=100Ω			5	ns

Rating and Characteristic Curves (BAT54-HF Series)

Fig.1 - Forward Characteristics

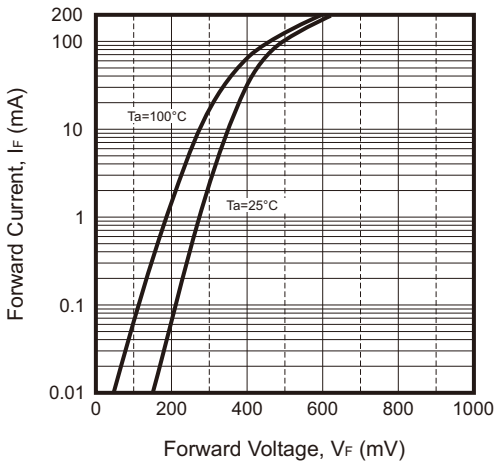

Fig.2 - Reverse Characteristics

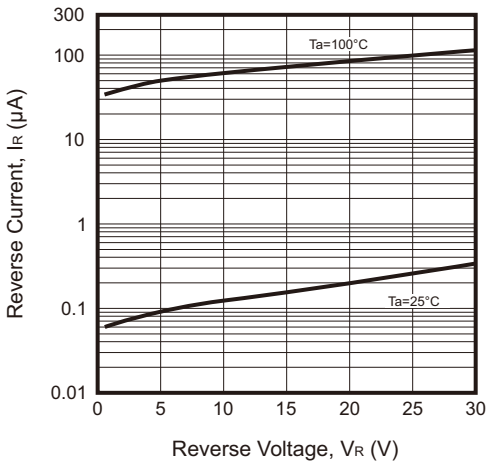

Fig.3 - Capacitance Characteristics

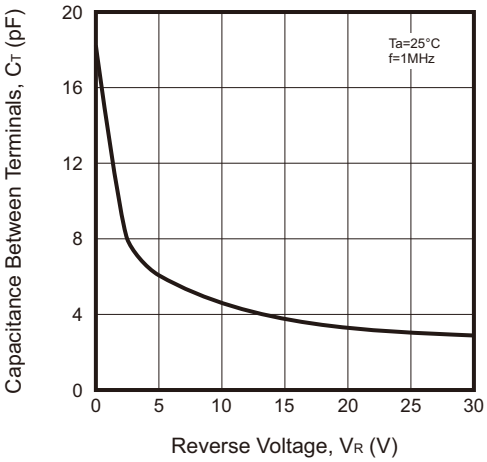

Fig.4 - Power Derating Curve

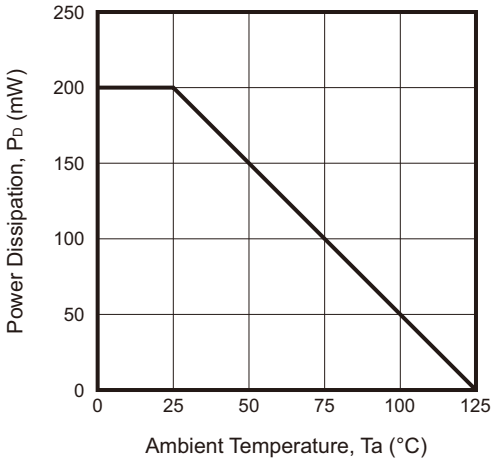

Company reserves the right to improve product design , functions and reliability without notice.

Reel Taping Specification

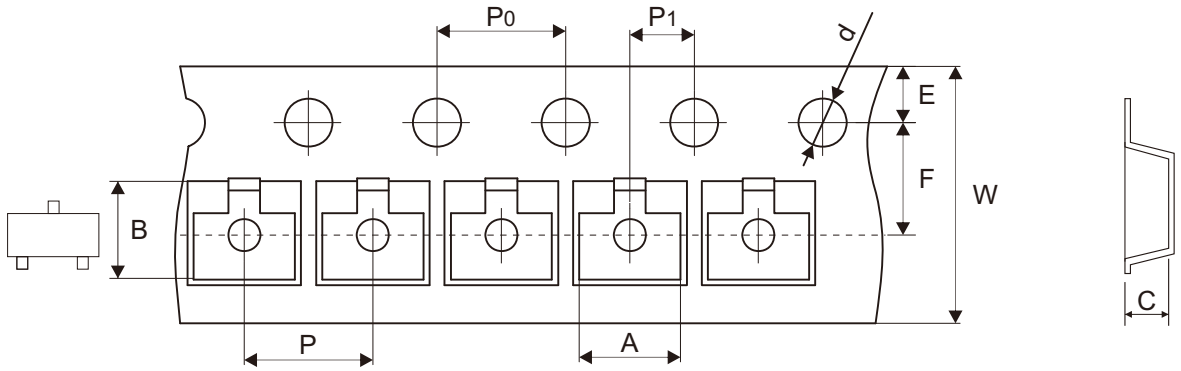

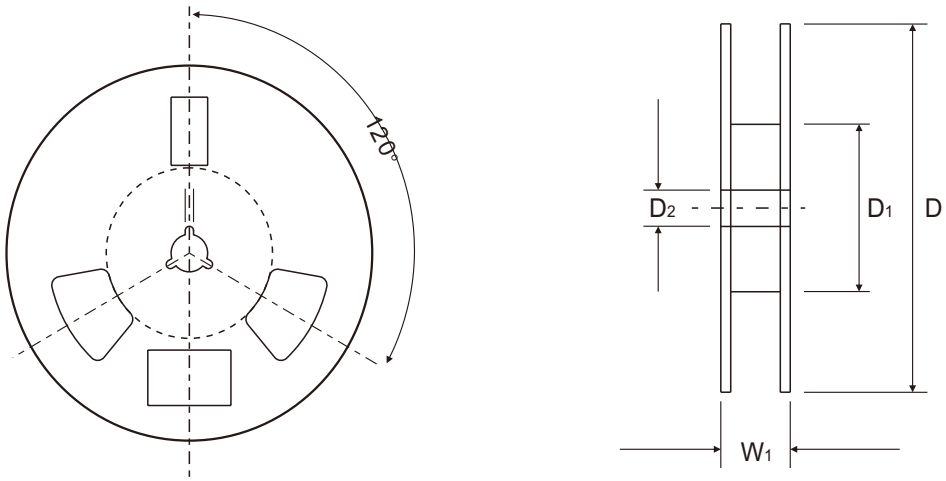

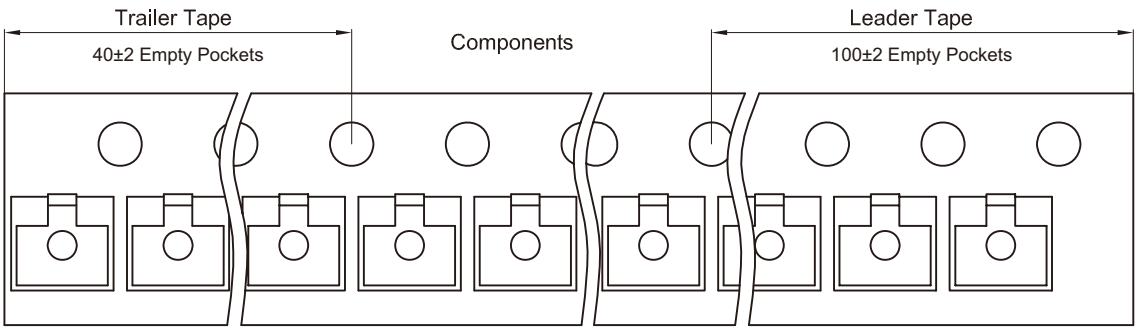

	SYMBOL	A	B	C	d	D	D1	D2
SOT-23	(mm)	3.15 ± 0.10	2.77 ± 0.10	1.22 ± 0.10	1.50 ± 0.10	178.00 ± 2.00	54.40 ± 1.00	13.00 ± 1.00
	(inch)	0.124 ± 0.004	0.109 ± 0.004	0.048 ± 0.004	0.059 ± 0.004	7.008 ± 0.079	2.142 ± 0.039	0.512 ± 0.039

	SYMBOL	E	F	P	P0	P1	W	W1
SOT-23	(mm)	1.75 ± 0.10	3.50 ± 0.10	4.00 ± 0.10	4.00 ± 0.10	2.00 ± 0.10	8.00 ± 0.10	12.30 ± 1.00
	(inch)	0.069 ± 0.004	0.138 ± 0.004	0.157 ± 0.004	0.157 ± 0.004	0.079 ± 0.004	0.315 ± 0.004	0.472 ± 0.039

Company reserves the right to improve product design , functions and reliability without notice.

Marking Code

Part Number	Marking Code
BAT54-HF	KL1
BAT54A-HF	KL2
BAT54C-HF	KL3
BAT54S-HF	KL4

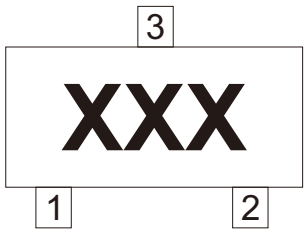

xxx = Product type marking code

Suggested PAD Layout

SIZE	SOT-23	
	(mm)	(inch)
A	0.90	0.035
B	0.80	0.031
C	0.95	0.037
D	2.00	0.079
E	2.90	0.114

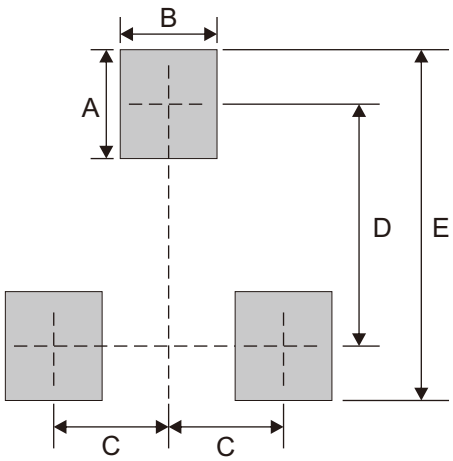

Note: 1. The pad layout is for reference purposes only.

Standard Packaging

Case Type	REEL PACK	
	REEL (pcs)	Reel Size (inch)
SOT-23	3,000	7