BAV19WS-HF Thru. BAV21WS-HF

RoHS Device
Halogen Free

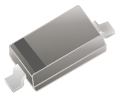

Features

- Fast switching device (Trr < 50nS).
- Power dissipation of 250mW.
- High stability and high reliability.
- Low reverse leakage.

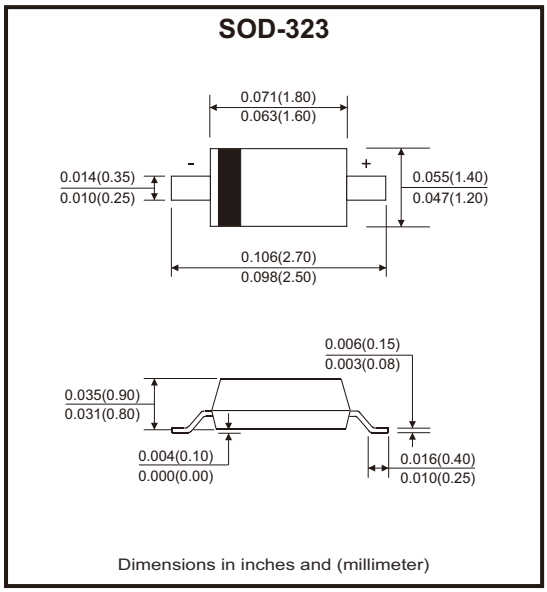

Mechanical data

- Case: SOD-323, molded plastic.
- Polarity: Color band denotes cathode end.
- Epoxy UL: 94V-0.
- Mounting position: Any.

Circuit Diagram



Maximum Rating (at Ta=25°C unless otherwise noted)

Parameter	Symbol	BAV19WS-HF	BAV20WS-HF	BAV21WS-HF	Unit
Reverse voltage	V_R	120	200	250	V
Peak reverse voltage	V_{RM}	100	150	250	V
Power dissipation	P_D	250			mW
Average rectified current	I_O	200			mA
Non-repetitive peak forward current	I_{FM}	400			mA
Non-repetitive peak forward surge current @ t=8.3ms	I_{FSM}	2			A
Thermal resistance junction to ambient air	$R_{\theta JA}$	500			°C/W
Operating junction temperature	T_J	150			°C
Storage temperature range	T_{STG}	-65 to +150			°C

Note: Valid provided that electrodes are kept at ambient temperature.

Electrical Characteristics (at Ta=25°C unless otherwise noted)

Parameter		Symbol	Conditions	Min	Max	Unit
Reverse voltage	BAV19WS-HF BAV20WS-HF BAV21WS-HF	VRB	I_B = 100μA	120 200 250		V
Reverse leakage current	BAV19WS-HF BAV20WS-HF BAV21WS-HF	I_R	V_R = 100V V_R = 150V V_R = 200V		0.1	μA
Forward voltage		V_F	I_F = 100mA I_F = 200mA		1.0 1.25	V
Reverse recovery time		t_{rr}	I_F = 30mA, I_R = 30mA, R_L =100Ω, I_{RR} = 3mA		50	nS
Capacitance		C	V_R = 0V, f = 1MHz		5	pF

Typical Rating and Characteristic Curves (BAV19WS-HF Thru. BAV21WS-HF)

Fig.1 - Forward Characteristics

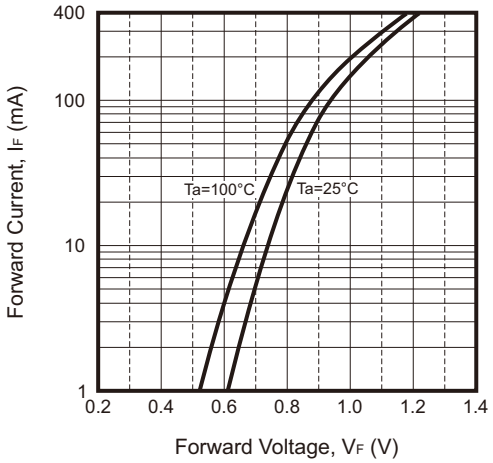

Fig.2 - Reverse Characteristics

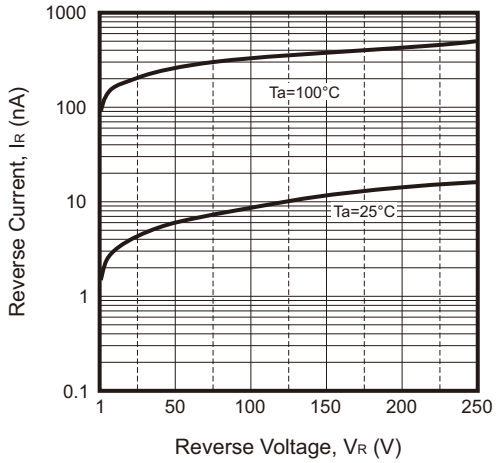

Fig.3 - Capacitance Characteristics

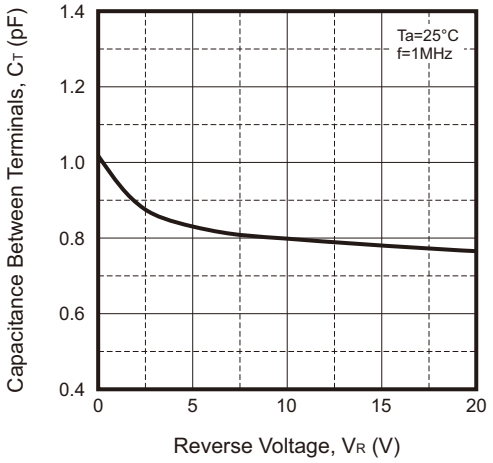

Fig.4 - Power Derating Curve

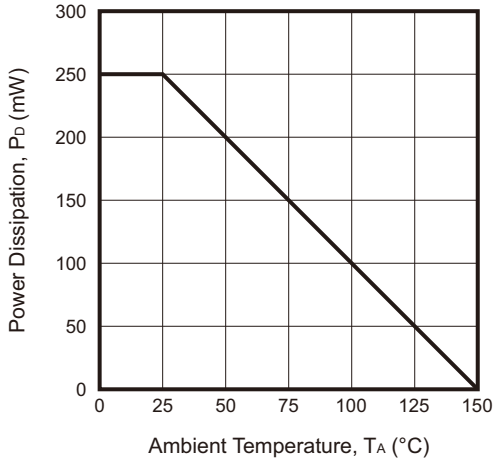

Reel Taping Specification

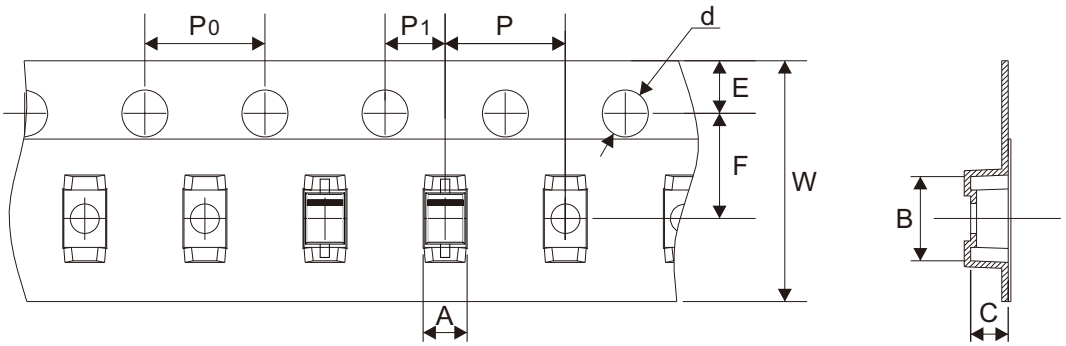

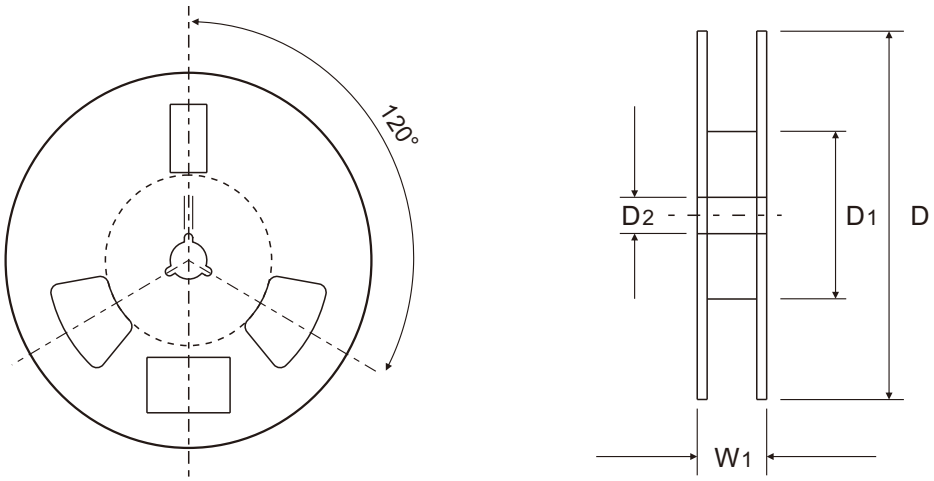

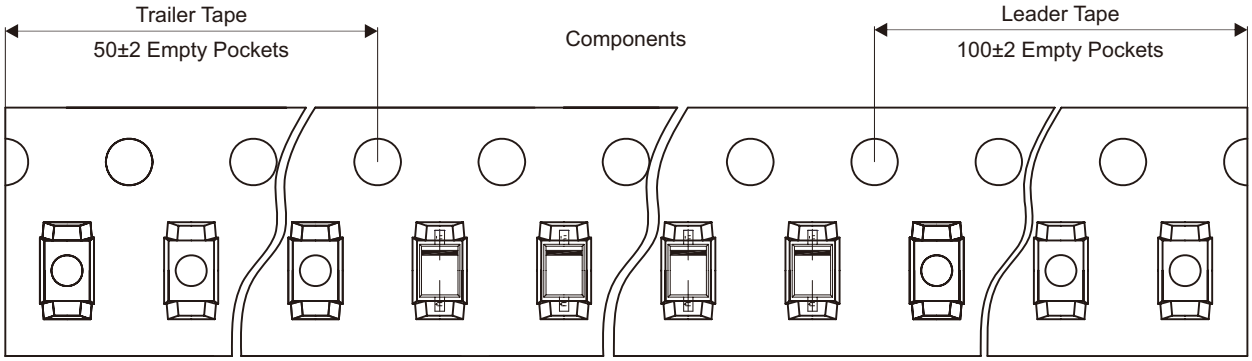

	SYMBOL	A	B	C	d	D	D1	D2
SOD-323	(mm)	1.46 ± 0.05	2.90 ± 0.05	1.25 ± 0.05	1.50 ± 0.10	178.00 ± 2.00	54.40 ± 1.00	13.00 ± 1.00
	(inch)	0.057 ± 0.002	0.114 ± 0.002	0.049 ± 0.002	0.059 ± 0.004	7.008 ± 0.079	2.142 ± 0.039	0.512 ± 0.039

	SYMBOL	E	F	P	P0	P1	W	W1
SOD-323	(mm)	1.75 ± 0.10	3.50 ± 0.10	4.00 ± 0.10	4.00 ± 0.10	2.00 ± 0.10	8.00 + 0.30 − 0.10	12.30 ± 1.00
	(inch)	0.069 ± 0.004	0.138 ± 0.004	0.157 ± 0.004	0.157 ± 0.004	0.079 ± 0.004	0.315 + 0.012 − 0.004	0.484 ± 0.039

Marking Code

Part Number	Marking Code
BAV19WS-HF	A8
BAV20WS-HF	T2
BAV21WS-HF	T3



xx = Product type marking code

▮ = Cathode band

Suggested P.C.B. PAD Layout

SIZE	SOD-323	
	(mm)	(inch)
A	0.80	0.031
B	0.80	0.031
C	3.00	0.118

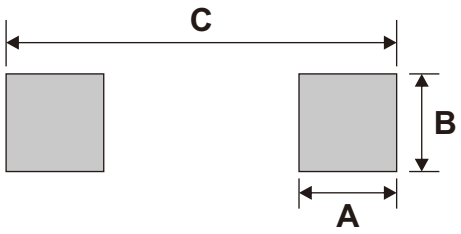

Standard Packaging

Case Type	REEL PACK	
	REEL (pcs)	Reel Size (inch)
SOD-323	3,000	7