CDBA3150-HF Thru. CDBA3200-HF

Reverse Voltage: 150 to 200 Volts
Forward Current: 3.0 Amp
RoHS Device
Halogen Free

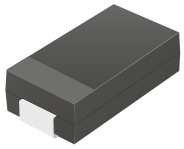

Features

-Low Profile surface mount applications in order to optimize board space.

-Low power loss, high efficiency.

-High current capability, low forward voltage drop.

-High surge capability.

-Guard ring for overvoltage protection.

-Ultra high-speed switching.

-Silicon epitaxial planar chip,metal silicon junction.

Mechanical data

-Epoxy: UL94-V0 rate flame retardant.

-Case: Molded plastic, DO-214AC / SMA

-Terminals: solderable per MIL-STD-750, method 2026.

-Polarity: Indicated by cathode band.

-weight: 0.055 grams

DO-214AC (SMA)

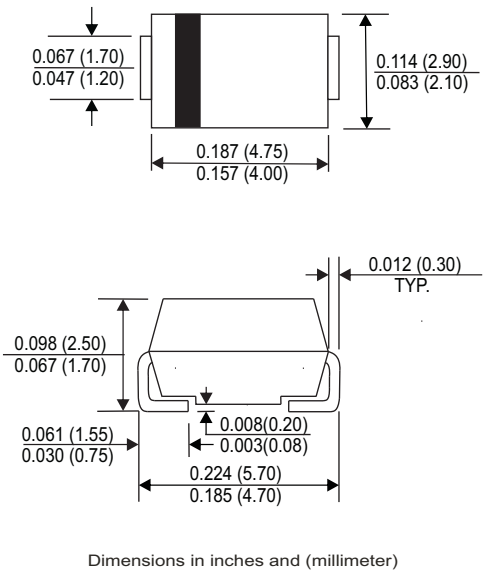

Dimensions in inches and (millimeter)

Maximum Ratings and Electrical Characteristics

Ratings at Ta=25°C unless otherwise noted.
Single phase, half wave, 60Hz, resistive or inductive loaded.
For capacitive load, derate current by 20% .

Parameter	Symbol	CDBA 3150-HF	CDBA 3200-HF	Units
Max. Repetitive peak reverse voltage	V_{RRM}	150	200	V
Max. DC blocking voltage	V_{DC}	150	200	V
Max. RMS voltage	V_{RMS}	105	140	V
Max. Instantaneous forward voltage @ 3.0A, T_A=25°C	V_F	0.87	0.90	V
Operating Temperature	T_J	-50 to +175		°C

Parameter	Conditions	Symbol	MIN.	TYP.	MAX.	Units
Forward rectified current	see Fig.1	I_O			3.0	A
Forward surge current	8.3ms single half sine-wave superimposed on rate load (JEDEC method)	I_{FSM}			70	A
Reverse Current	V_R =V_{RRM} T_A=25°C	I_R			0.5	mA
	V_R =V_{RRM} T_A=100°C	I_R			20	mA
Thermal Resistance	Junction to ambient	$R_{\theta JA}$		55		°C/W
Diode Junction capacitance	f=1MHz and applied 4V DC reverse Voltage	C_J		250		pF
Storage temperature		T_{STG}	-50		+175	°C

Company reserves the right to improve product design , functions and reliability without notice.

REV: C

RATING AND CHARACTERISTIC CURVES (CDBA3150-HF thru. CDBA3200-HF)

Fig.1 - Typical Forward Current Derating Curve

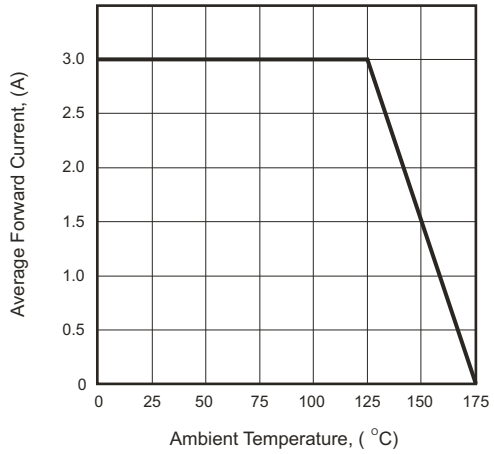

Fig.2 - Typical Forward Characteristics

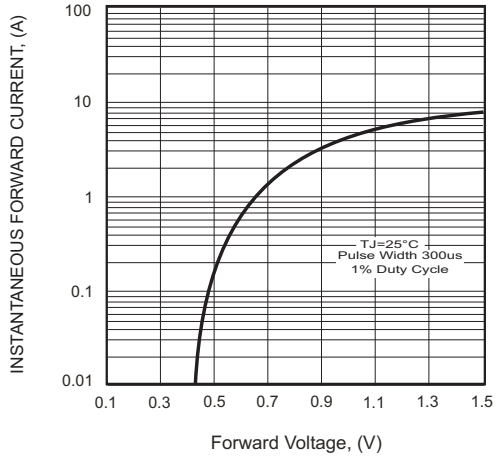

Fig.3 - Maximum Non-repetitive Forward Surge Current

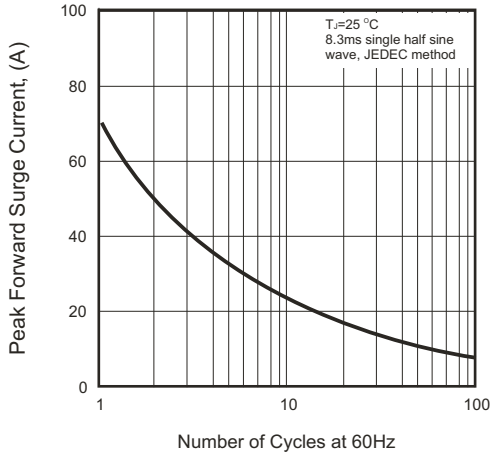

Fig.4 - Typical Junction Capacitance

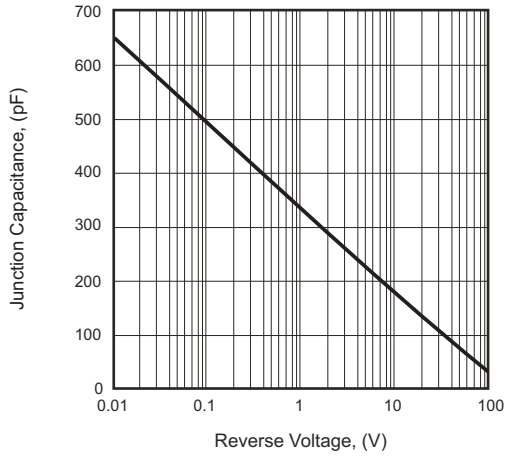

Fig.5 - Typical Reverse Characteristics

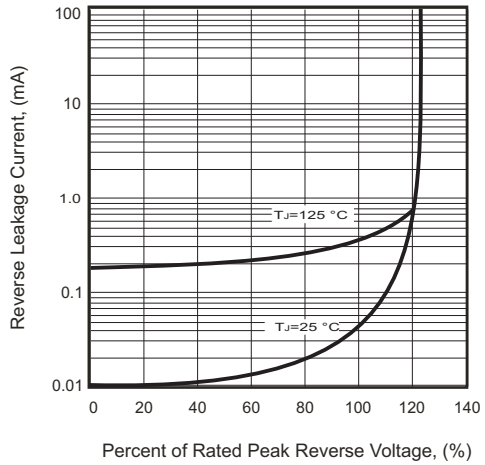

Company reserves the right to improve product design , functions and reliability without notice.

Reel Taping Specification

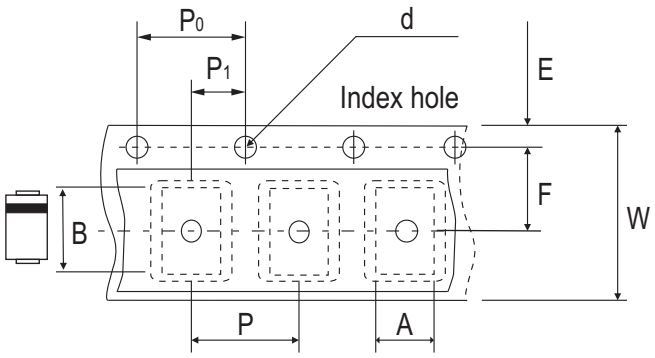

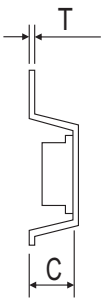

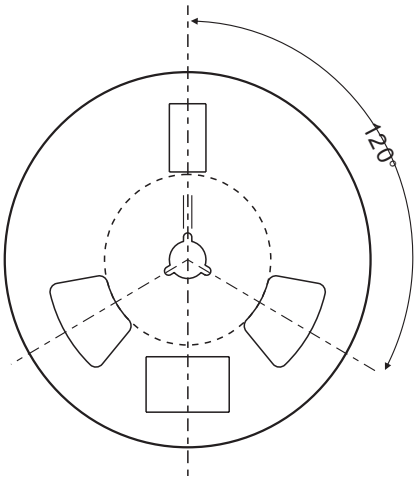

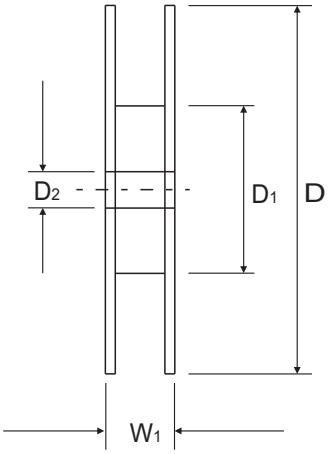

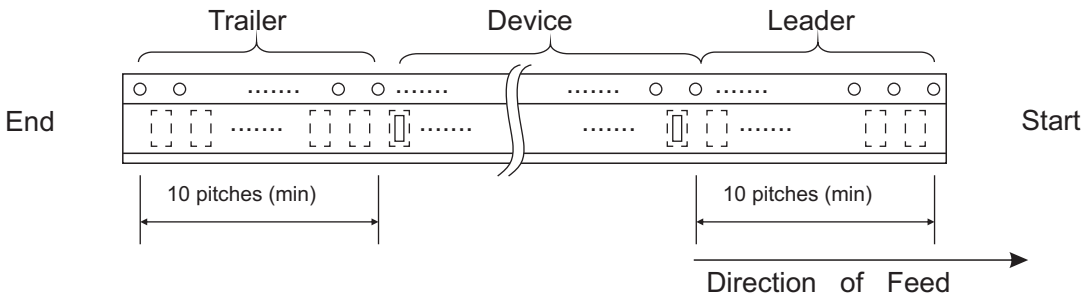

	SYMBOL	A	B	C	d	D	D1	D2
DO-214AC (SMA)	(mm)	2.70 ± 0.10	5.30 ± 0.10	2.66 ± 0.10	1.50 ± 0.10	330 ± 2.00	62.0 MIN.	13.50 ± 0.50
	(inch)	0.106 ± 0.004	0.209 ± 0.004	0.105 ± 0.004	0.059 ± 0.004	12.99 ± 0.079	2.441 MIN.	0.531 ± 0.020

	SYMBOL	E	F	P	P0	P1	T	W	W1
DO-214AC (SMA)	(mm)	1.75 ± 0.10	5.50 ± 0.10	4.00 ± 0.10	4.00 ± 0.10	2.00 ± 0.10	0.60 ± 0.10	12.0 ± 0.30	18.40 ± 1.00
	(inch)	0.069 ± 0.004	0.217 ± 0.004	0.157 ± 0.004	0.157 ± 0.004	0.079 ± 0.004	0.236 ± 0.004	0.472 ± 0.012	0.724 ± 0.039

Company reserves the right to improve product design , functions and reliability without notice.

Marking Code

Part Number	Marking Code
CDBA3150-HF	SK315
CDBA3200-HF	SK320

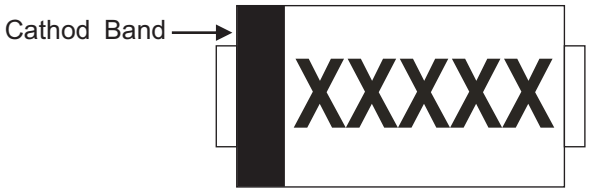

xxxxx = Product type marking code

Suggested PAD Layout

SIZE	DO-214AC (SMA)	
	(mm)	(inch)
A	4.00	0.157
B	2.50	0.098
C	1.70	0.068
D	6.50	0.256
E	1.50	0.060

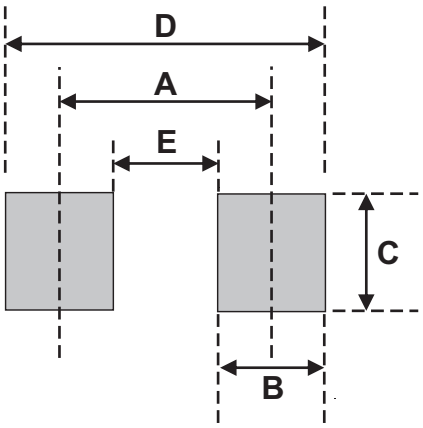

Standard Packaging

Case Type	REEL PACK	
	REEL (pcs)	Reel Size (inch)
DO-214AC (SMA)	5,000	13