Low VF SMD Schottky Bridge Rectifiers

CDBHD140L-HF Thru. CDBHD1100L-HF

Reverse Voltage: 40 to 100 V
Forward Current: 1.0 A
RoHS Device
Halogen Free



Features

- Schottky brrier chip.
- Low power loss, high efficiency.
- ideally suited for automatic assembly.
- Surge overload rating to 50A peak.
- Plastic case material has UL flammability classification 94V-0.

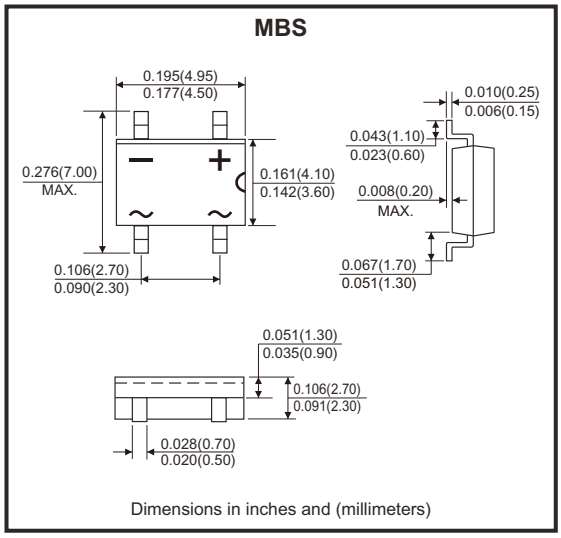

Mechanical data

- Case: MBS, molded plastic.
- Terminals: Plated leads solderable per MIL-STD-202, method 208.
- Polarity: As marked on body.
- Mounting position: Any.

Circuit Diagram

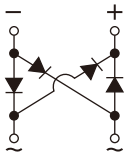

Maximum Ratings and Electrical Characteristics (at T_A=25°C, unless otherwise specified)

Single phase, half wave, 60Hz, resistive or inductive load. For capacitive load, derate current by 20%.

Parameter	Symbol	CDBHD140L -HF	CDBHD160L -HF	CDBHD1100L -HF	Unit
Peak repetitive reverse voltage	V_{RRM}	40	60	100	V
RMS reverse voltage	V_{RMS}	28	42	70	V
DC blocking voltage	V_{DC}	40	60	100	V
Average rectified output current (Note 1) @ T_C=100°C	$I_{F(AV)}$	1			A
Non-repetitive peak forward surge current 8.3ms single has sine-wave superimposed on rated load (JEDEC method)	I_{FSM}	50			A
I^2t rating for fusing (t < 8.3ms)	I^2t	10.375			A^2s
Forward voltage per element @ I_F=1A	V_{FM}	0.44	0.625	0.75	V
Peak reverse current @ T_A=25°C at rated DC blocking voltage @ T_A=100°C	I_{RM}	0.1 10		0.05 5	mA
Typical junction capacitance per leg (Note 3)	C_J	200			pF
Typical thermal resistance per leg (Note 2)	$R_{\theta JL}$	16			°C/W
Operating junction temperature range	T_J	-55 to +150			°C
Operating and storage temperature range	T_{STG}	-55 to +150			°C

Notes: 1. Mounted on aluminum substrate PC board with 1.3mm² solder pad.
2. Thermal resistance from junction to lead.
3. f=1MHz and applied 4V DC reverse voltage.

Rating and Characteristics Curves (CDBHD140L-HF Thru. CDBHD1100L-HF)

Fig.1 - Forward Current Derating Curve

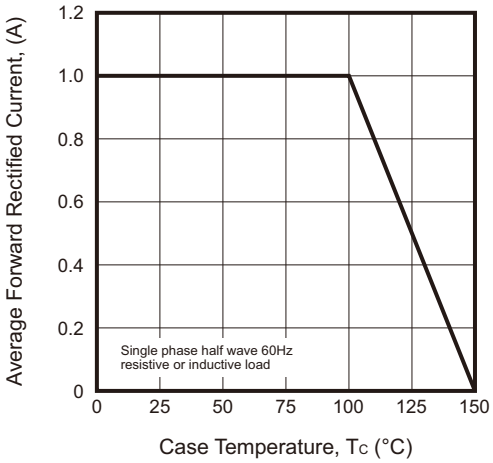

Fig.2 - Maximum Non-Repetitive Peak Forward surge current

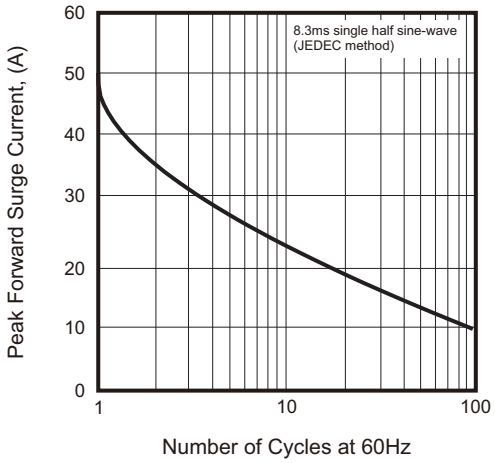

Fig.3 - Typical Instantaneous Forward Characteristics

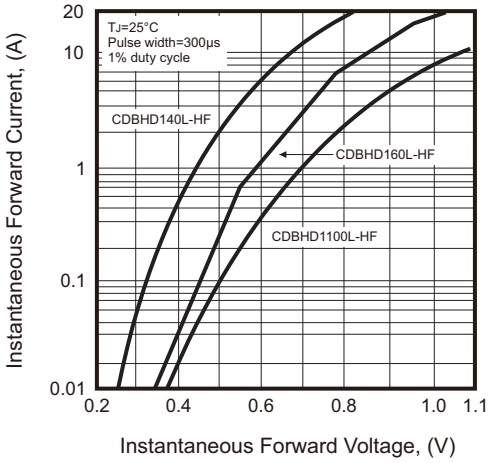

Fig.4 - Typical Reverse Characteristics

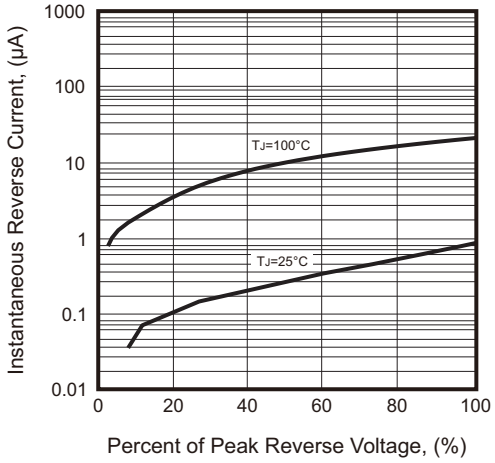

Fig.5 - Typical Transient Thermal Impedance

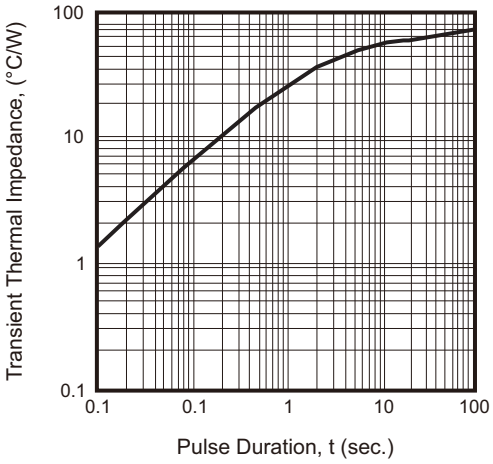

Reel Taping Specification

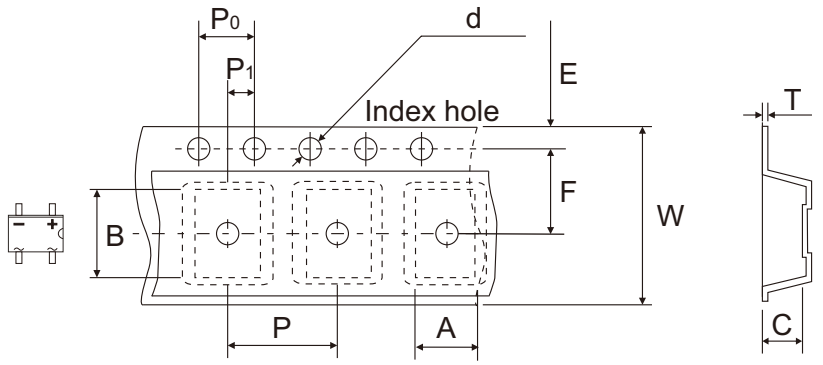

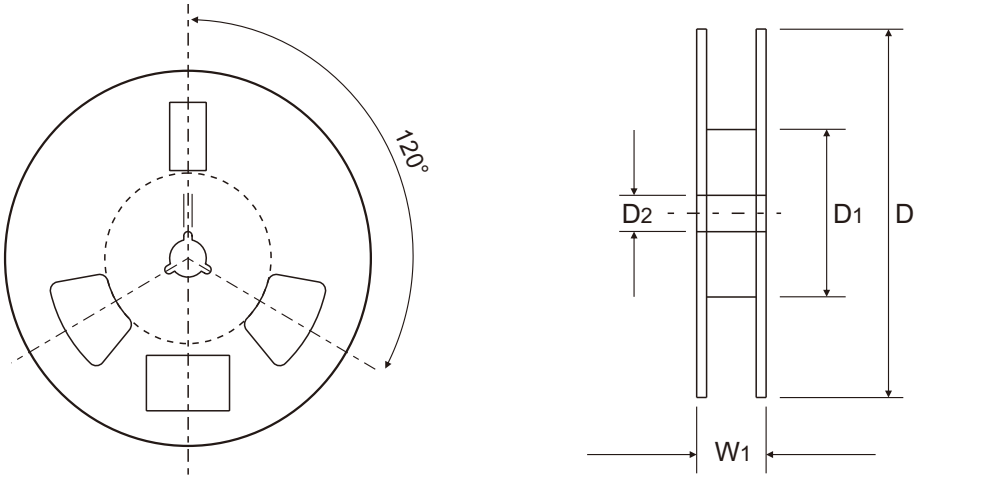

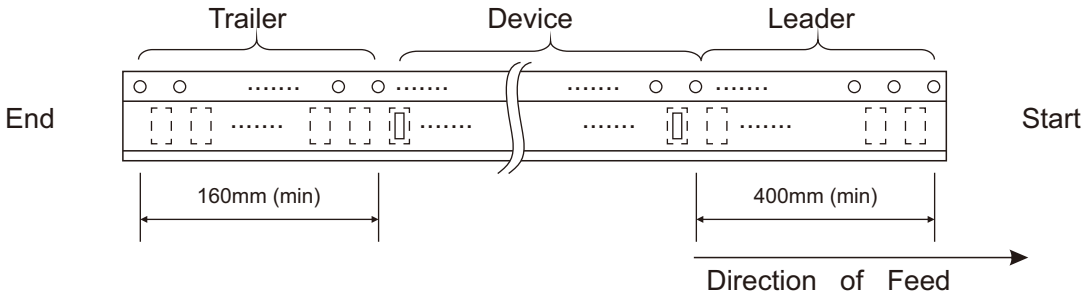

	SYMBOL	A	B	C	d	D	D1	D2
MBS	(mm)	4.90 ± 0.10	7.22 ± 0.10	2.88 ± 0.10	1.55 ± 0.05	330 ± 1.00	100 ± 0.50	13.00 + 0.50
	(inch)	0.193 ± 0.004	0.284 ± 0.004	0.113 ± 0.004	0.061 ± 0.002	12.992 ± 0.039	3.937 ± 0.020	0.512 + 0.020

	SYMBOL	E	F	P	P0	P1	T	W	W1
MBS	(mm)	1.75 ± 0.10	5.50 ± 0.05	8.00 ± 0.10	4.00 ± 0.10	2.00 ± 0.05	0.27 ± 0.03	12.00 ± 0.10	18.40 Max
	(inch)	0.069 ± 0.004	0.217 ± 0.002	0.315 ± 0.004	0.157 ± 0.004	0.079 ± 0.004	0.011 ± 0.001	0.472 ± 0.004	0.724 Max

Marking Code

Part Number	Marking Code
CDBHD140L-HF	MDS14L
CDBHD160L-HF	MDS16L
CDBHD1100L-HF	MDS110L

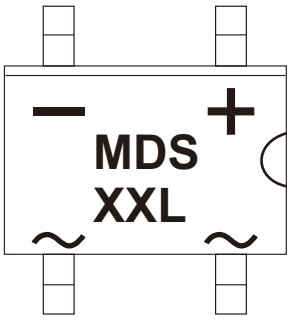

xx/xxx = Product type marking code

Suggested P.C.B. PAD Layout

SIZE	MBS	
	(mm)	(inch)
A	0.90	0.035
B	1.84	0.072
C	2.40	0.094
D	6.00	0.236

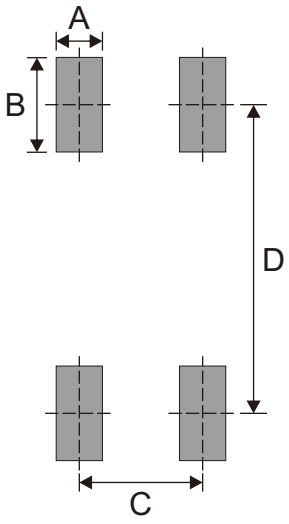

Standard Packaging

Case Type	REEL PACK	
	REEL (pcs)	Reel Size (inch)
MBS	3,000	13