CDBMHT340-HF Thru. CDBMHT3100-HF

Reverse Voltage: 40 to 100 Volts
Forward Current: 3.0 Amp
RoHS Device
Halogen Free

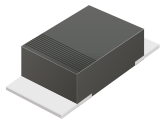

Features

- Excellent power dissipation offersbetter reverse leakage current and thermal resistance.
- Low power loss, high efficiency.
- High current capability, low forward voltage drop.
- High surge capability.
- Guard ring for overvoltage protection.
- Ultra high-speed switching.
- Silicon epitaxial planar chip, metal silicon junction.

Mechanical data

- Epoxy: UL94-V0 rated flame retardant.
- Case: Molded plastic, SOD-123HT
- Terminals: Solderable per MIL-STD-750, method 2026.
- Polarity: Indicated by cathode band.
- Mounting Position : Any.
- Weight: 0.011 grams approx.

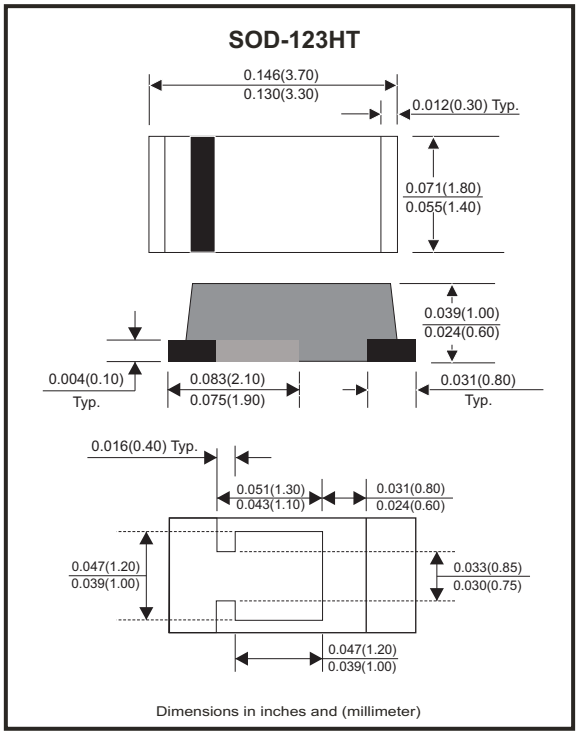

Circuit diagram



Maximum Ratings (at T_A=25°C unless otherwise noted)

Parameter	Symbol	CDBMHT340-HF	CDBMHT360-HF	CDBMHT3100-HF	Unit
Repetitive peak reverse voltage	V_{RRM}	40	60	100	V
Continuous reverse voltage	V_R	40	60	100	V
RMS voltage	V_{RMS}	28	42	70	V
Forward voltage @ I_F=3A	V_F	0.55	0.70	0.85	V
Operating temperature	T_J	-55 to +125	-55 to +150		°C
Storage temperature range	T_{STG}	-65 to +175			°C

Electrical Characteristics (at T_A=25°C unless otherwise noted)

Parameter	Conditions	Symbol	MIN.	TYP.	MAX.	Unit
Forward rectified current	see Fig.1	I_O			3	A
Forward surge current	8.3ms single half sine-wave superimposed on rate load (JEDEC method)	I_{FSM}			50	A
Reverse Current	V_R =V_{RRM} T_J=25°C	I_R			0.2	mA
	V_R =V_{RRM} T_J=100°C	I_R			10	mA
Thermal Resistance	Junction to ambient	$R_{\theta JA}$		70		°C/W
	Junction to case	$R_{\theta JC}$		35		
	Junction to lead	$R_{\theta JL}$		30		
Diode Junction capacitance	f=1MHz and applied 4V DC reverse Voltage	C_J		160		pF

Company reserves the right to improve product design , functions and reliability without notice.

REV:B

Rating and Characteristic Curves (CDBMHT340-HF Thru. CDBMHT3100-HF)

Fig.1 - Typical Forward Current Derating Curve

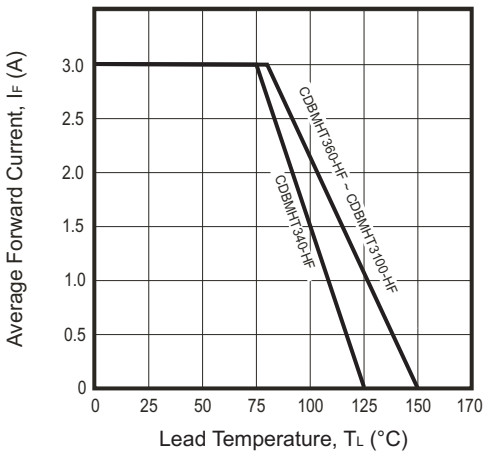

Fig.2 - Typical Forward Characteristics

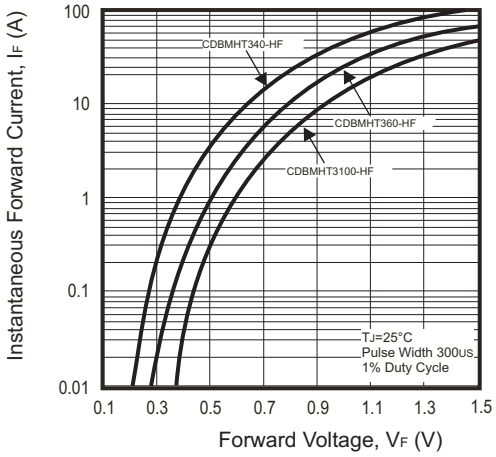

Fig.3 - Maximum Non-Repetitive Forward Surge Current

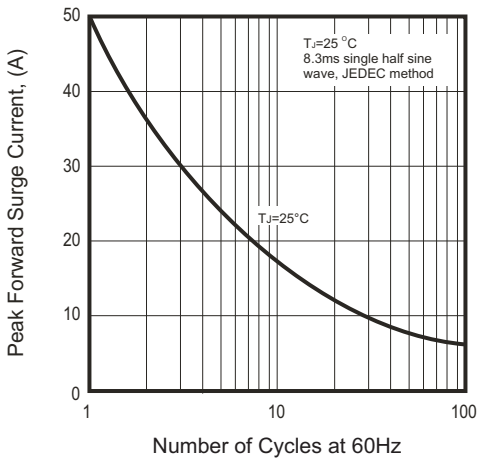

Fig.4 - Typical Junction Capacitance

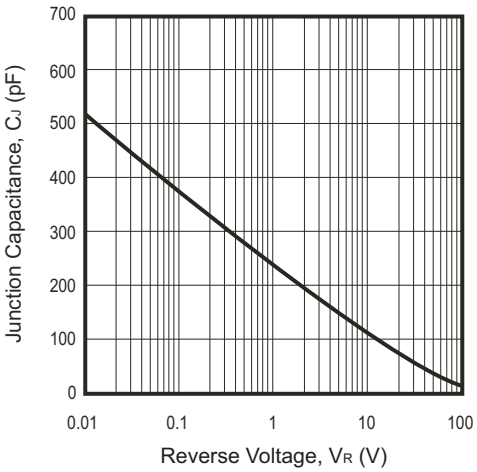

Fig.5 - Typical Reverse Characteristics

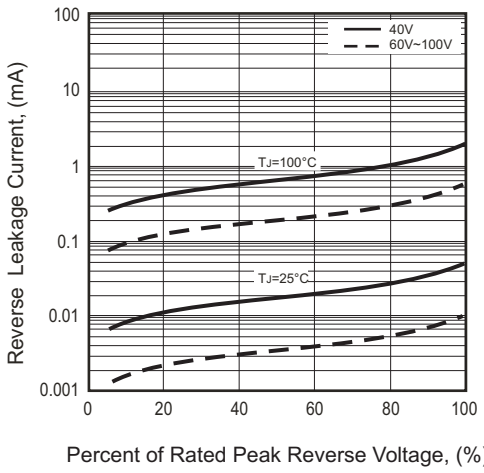

Company reserves the right to improve product design , functions and reliability without notice.

Reel Taping Specification

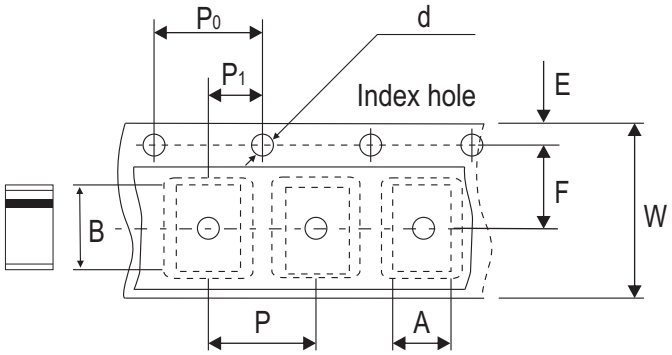

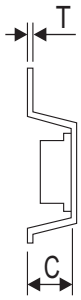

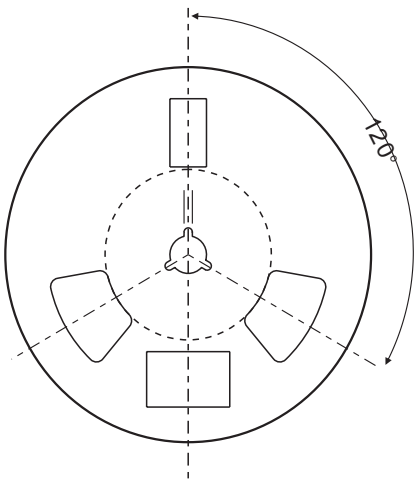

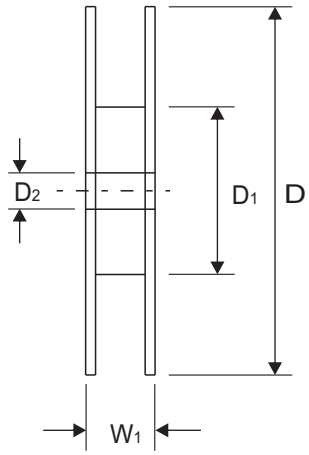

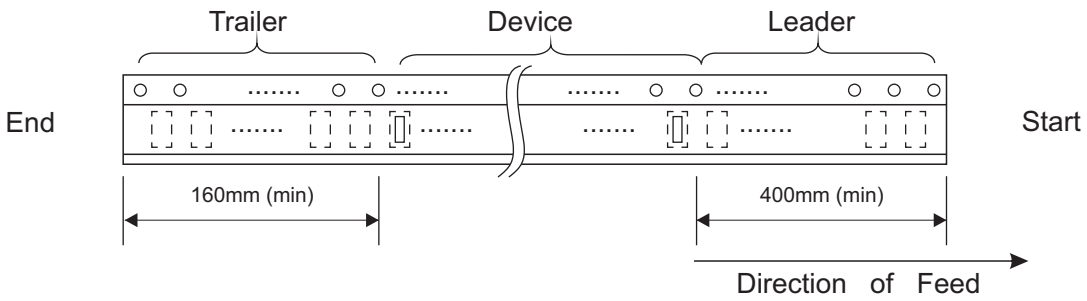

	SYMBOL	A	B	C	d	D	D_1	D_2
SOD-123HT	(mm)	2.00 ± 0.10	3.85 ± 0.10	1.10 ± 0.10	1.50 ± 0.10	178.00 ± 2.00	62.00 MIN.	13.00 ± 0.50
	(inch)	0.079 ± 0.004	0.152 ± 0.004	0.043 ± 0.004	0.059 ± 0.004	7.007 ± 0.079	2.441 MIN.	0.512 ± 0.020

	SYMBOL	E	F	P	P_0	P_1	W	W_1
SOD-123HT	(mm)	1.75 ± 0.10	3.50 ± 0.10	4.00 ± 0.10	4.00 ± 0.10	2.00 ± 0.10	8.00 ± 0.30	11.40 ± 1.00
	(inch)	0.069 ± 0.004	0.138 ± 0.10	0.157 ± 0.004	0.157 ± 0.004	0.079 ± 0.004	0.315 ± 0.012	0.449 ± 0.039

Company reserves the right to improve product design , functions and reliability without notice.

Marking Code

Part Number	Marking Code
CDBMHT340-HF	34
CDBMHT360-HF	36
CDBMHT3100-HF	310



xx / xxx = Product type marking code

Suggested PAD Layout

SIZE	SOD-123HT	
	(mm)	(inch)
A	0.90	0.035
B	0.90	0.035
C	1.90	0.075
D	0.70	0.028
E	1.10	0.043
F	1.20	0.047

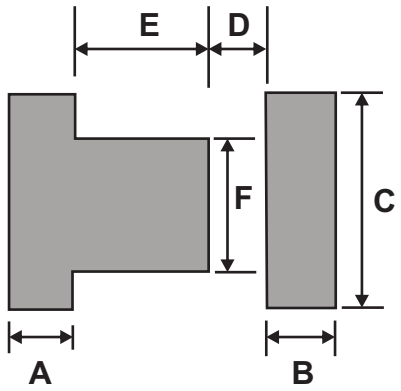

Standard Packaging

Case Type	REEL PACK	
	REEL (pcs)	Reel Size (inch)
SOD-123HT	3,000	7