CDBUR0240-HF

Io = 200 mA
V_R = 40 Volts
RoHS Device
Halogen Free

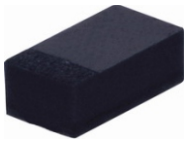

Features

- Designed for mounting on small surface.
- Extremely thin/leadless package.
- Majority carrier conduction.

Mechanical data

- Case: 0603/SOD-523F standard package, molded plastic.
- Terminals: Gold plated, solderable per MIL-STD-750,method 2026.
- Polarity: Indicated by cathode band.
- Mounting position: Any.
- Weight: 0.003 grams(approx.).

0603/SOD-523F

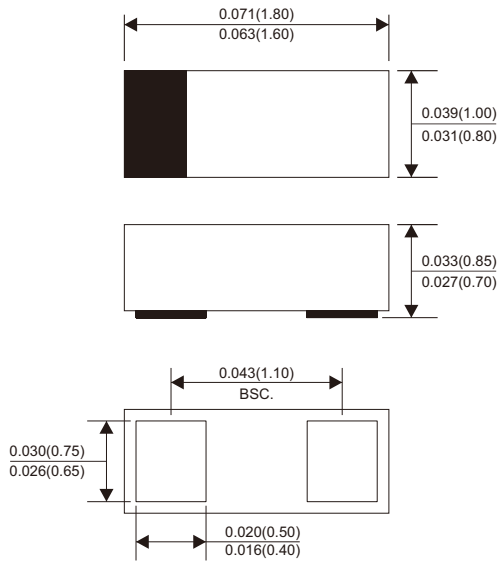

Dimensions in inches and (millimeter)

Circuit Diagram



Maximum Rating (at T_A=25°C unless otherwise noted)

Parameter	Conditions	Symbol	Min	Typ	Max	Unit
Repetitive peak reverse voltage		V_{RRM}			45	V
Reverse voltage		V_R			40	V
Average forward current		I_O			200	mA
Forward current, surge peak	8.3 ms single half sine-wave superimposed on rate load(JEDEC method)	I_{FSM}		3		A
Power dissipation		P_D			150	mW
Junction temperature		T_j			+125	°C
Storage temperature		T_{STG}	-40		+125	°C

Electrical Characteristics (at T_A=25°C unless otherwise noted)

Parameter	Conditions	Symbol	Min	Typ	Max	Unit
Forward voltage	I_F = 200 mA DC	V_F		0.45	0.55	V
Reverse current	V_R = 30V	I_R		1	10	μA
Capacitance between terminals	F = 1 MHZ and 10 VDC reverse voltage	C_T		9		pF

Rating and Characteristic Curves (CDBUR0240-HF)

Fig.1 - Forward Characteristics

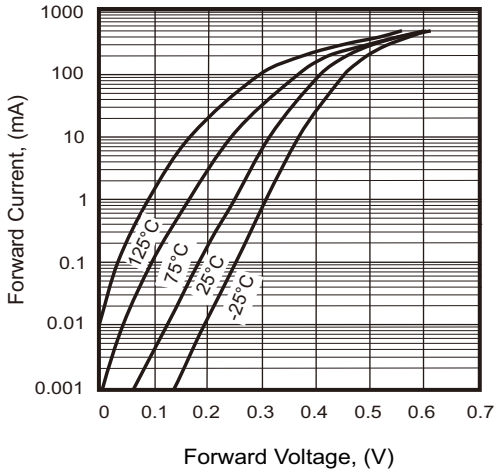

Fig.2 - Reverse Characteristics

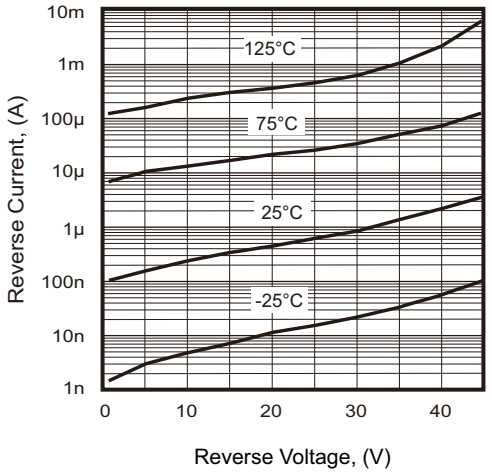

Fig.3 - Capacitance Between Terminals Characteristics

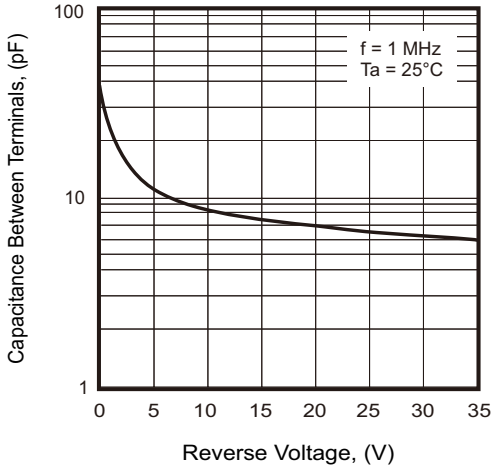

Fig.4 - Current Derating Curve

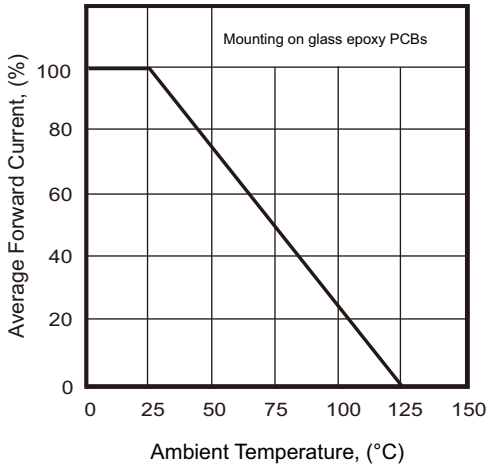

Reel Taping Specification

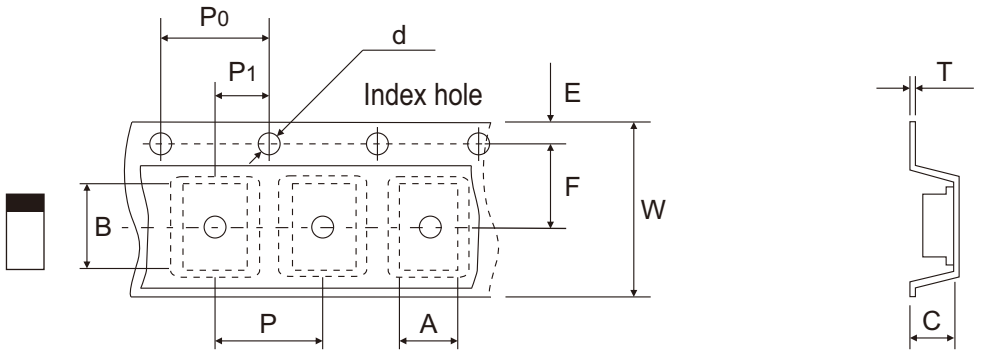

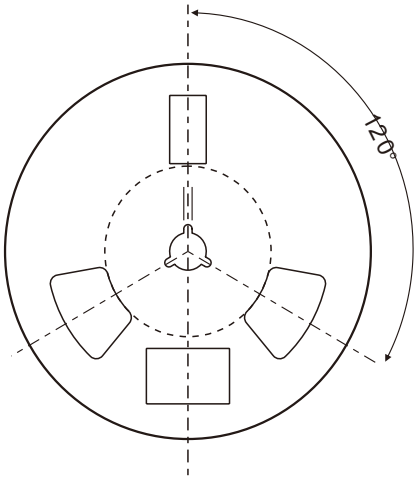

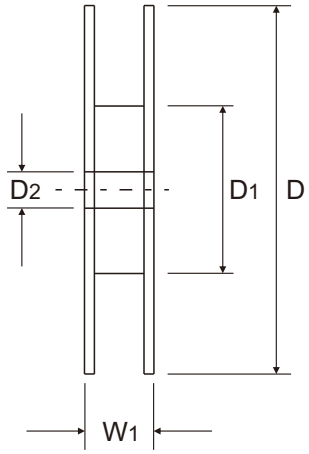

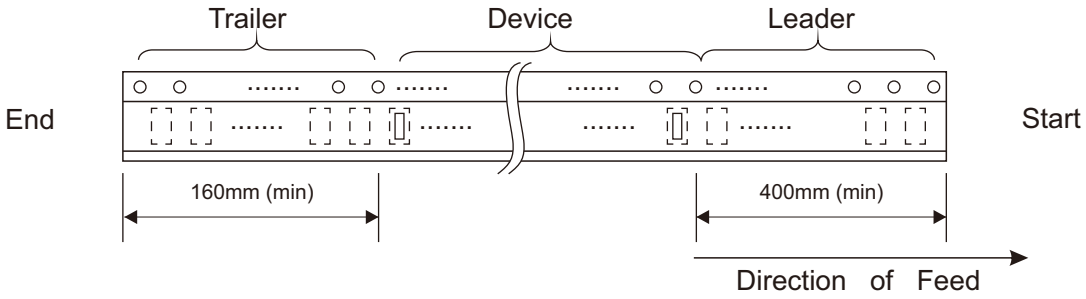

	SYMBOL	A	B	C	d	D	D1	D2
0603 (SOD-523F)	(mm)	1.16 ± 0.10	1.90 ± 0.10	0.95 ± 0.10	1.50 + 0.10 − 0.00	178.00 ± 1.00	60.00 ± 0.50	13.50 ± 0.20
	(inch)	0.046 ± 0.004	0.075 ± 0.004	0.037 ± 0.004	0.059 + 0.004 − 0.000	7.008 ± 0.039	2.362 ± 0.020	0.531 ± 0.008

	SYMBOL	E	F	P	P0	P1	T	W	W1
0603 (SOD-523F)	(mm)	1.75 ± 0.10	3.50 ± 0.05	4.00 ± 0.10	4.00 ± 0.10	2.00 ± 0.05	0.22 ± 0.03	8.00 ± 0.20	12.00 + 0.50 − 0.00
	(inch)	0.069 ± 0.004	0.138 ± 0.002	0.157 ± 0.004	0.157 ± 0.004	0.079 ± 0.002	0.009 ± 0.001	0.315 ± 0.008	0.472 + 0.020 − 0.000

Marking Code

Part Number	Marking Code
CDBUR0240-HF	B7



Suggested P.C.B. PAD Layout

SIZE	0603/SOD-523F	
	(mm)	(inch)
A	1.25	0.049
B	0.60	0.024
C	1.00	0.039
D	1.85	0.073
E	0.65	0.026

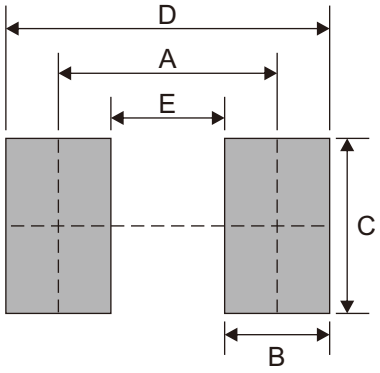

Standard Packaging

Case Type	REEL PACK	
	REEL (pcs)	Reel Size (inch)
0603/ SOD-523F	4,000	7