CDBV340-HF

Forward current: 3A
Reverse voltage: 40V
RoHS Device
Halogen Free

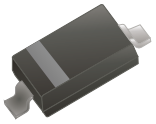

SOD-323

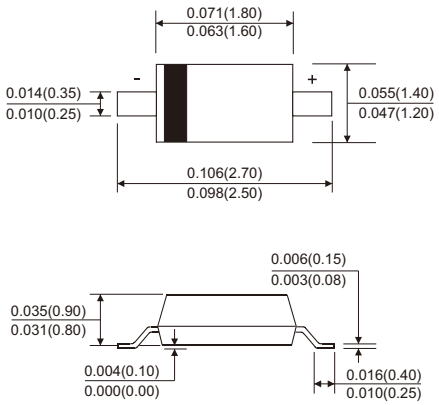

Dimensions in inches and (millimeter)

Features

- Low forward voltage drop.
- For power supply.

Mechanical data

- Case: SOD-323, molded plastic.
- Polarity: Color band denotes cathode end.
- Mounting position: Any.

Circuit Diagram



Maximum Ratings (At Ta=25°C, unless otherwise noted)

Parameter	Symbol	Value	Unit
Peak repetitive reverse voltage Working peak reverse voltage	V_{RRM} V_{RWM}	40	V
RMS reverse voltage	V_{RMS}	14	V
Forward current (Note 3)	I_F	3	A
Peak forward surge current 8.3ms single half sine-wave	I_{FSM}	9	A
Typical Thermal resistance (Note 1)	$R_{\theta JA}$	400	°C/W
Typical Thermal resistance (Note 2)		208	
Power dissipation (Note 1)	P_D	250	mW
Power dissipation (Note 2)		480	
Operating junction temperature	T_J	125	°C
Storage temperature range	T_{STG}	-55 to +150	°C

Notes: 1. Device mounted on an FR4 PCB, single-sided copper, tin-plated and standard footprint.
2. Device mounted on an FR4 PCB with copper pad 10 x 10 mm.
3. Pulse test: tp ≤ 300 μs ; δ ≤ 0.02.

Electrical Characteristics (At Ta=25°C, unless otherwise noted)

Parameter	Conditions	Symbol	Min.	Typ.	Max.	Unit
Forward voltage	I_F = 1A	V_F			0.45	V
	I_F = 2A				0.55	
	I_F = 3A				0.65	
Reverse breakdown voltage	I_R = 1mA	$V_{(BR)}$	40			V
Maximum reverse current @T_J = 25°C	V_R = 20V	I_R			50	μA
	V_R = 40V				100	
Total capacitance	V_R = 5V, f = 1MHz	C_{tot}			120	pF

Notes: 1. Pulse test: tp ≤ 300 μs ; δ ≤ 0.02.

Typical Rating and Characteristic Curves (CDBV340-HF)

Fig.1 - Power Derating Curve

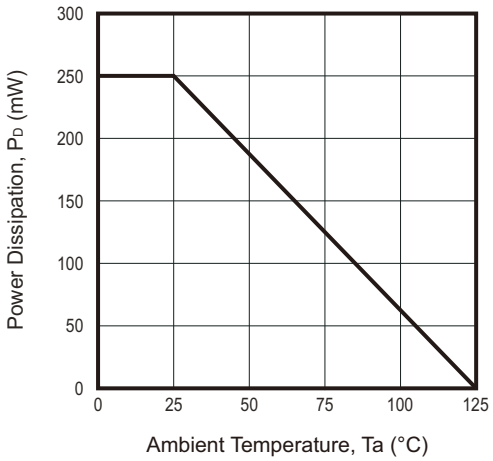

Fig.2 - Capacitance Characteristics

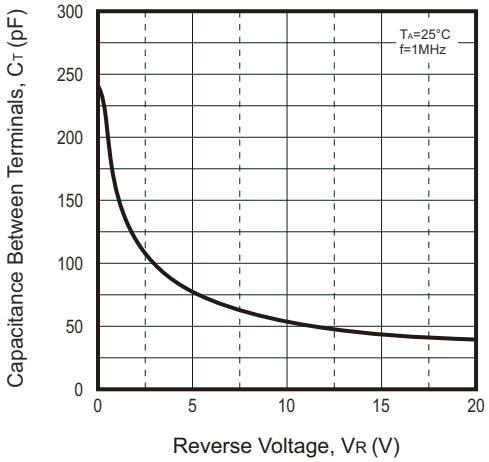

Fig.3 - Forward Characteristics

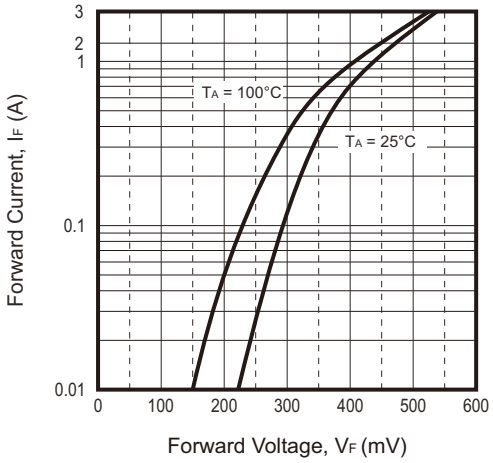

Fig.4 - Reverse Characteristics

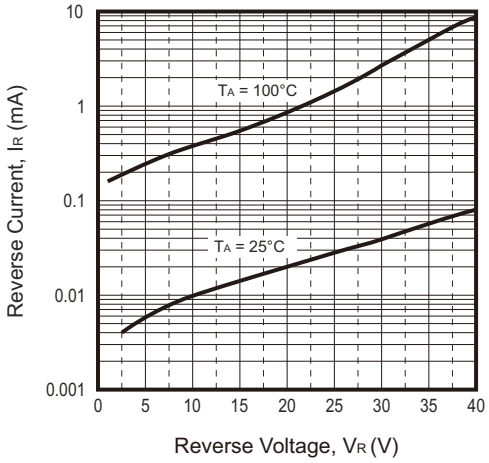

Reel Taping Specification

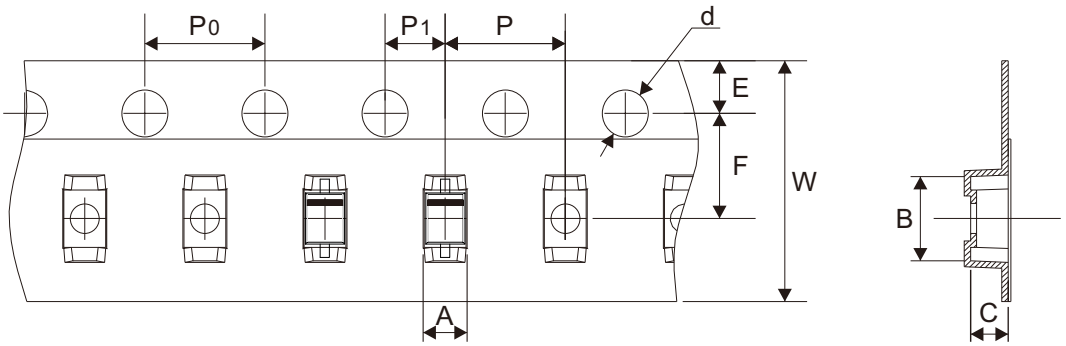

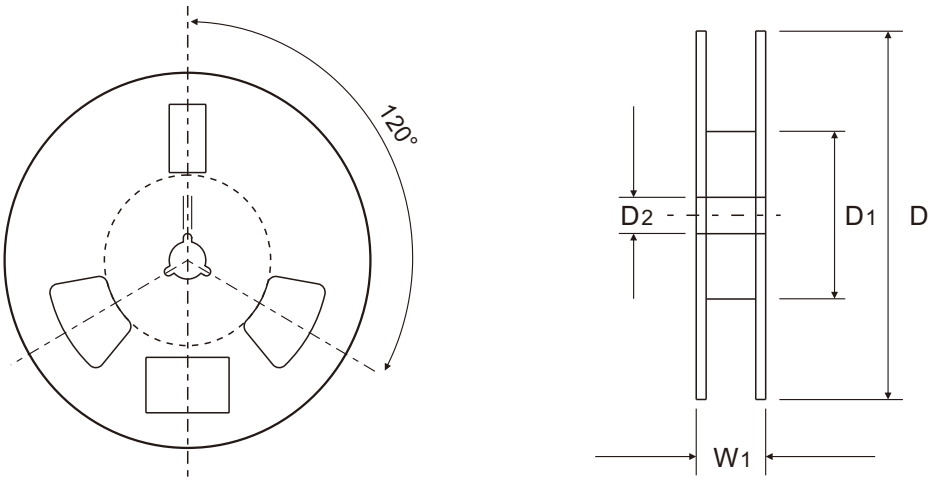

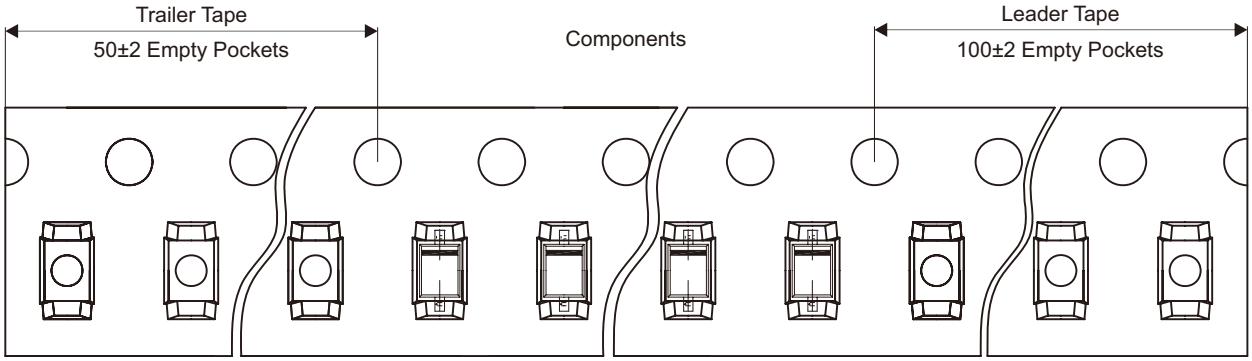

	SYMBOL	A	B	C	d	D	D1	D2
SOD-323	(mm)	1.46 ± 0.05	2.90 ± 0.05	1.25 ± 0.05	1.50 ± 0.10	178.00 ± 2.00	54.40 ± 1.00	13.00 ± 1.00
	(inch)	0.057 ± 0.002	0.114 ± 0.002	0.049 ± 0.002	0.059 ± 0.004	7.008 ± 0.079	2.142 ± 0.039	0.512 ± 0.039

	SYMBOL	E	F	P	P0	P1	W	W1
SOD-323	(mm)	1.75 ± 0.10	3.50 ± 0.10	4.00 ± 0.10	4.00 ± 0.10	2.00 ± 0.10	8.00 + 0.30 − 0.10	12.30 ± 1.00
	(inch)	0.069 ± 0.004	0.138 ± 0.004	0.157 ± 0.004	0.157 ± 0.004	0.079 ± 0.004	0.315 + 0.012 − 0.004	0.484 ± 0.039

Marking Code

Part Number	Marking Code
CDBV340-HF	SH



▌= Cathode band

Solid dot = Halogen Free

Suggested P.C.B. PAD Layout

SIZE	SOD-323	
	(mm)	(inch)
A	0.80	0.031
B	0.80	0.031
C	3.00	0.118

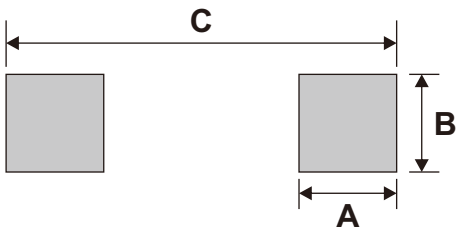

Standard Packaging

Case Type	REEL PACK	
	REEL (pcs)	Reel Size (inch)
SOD-323	3,000	7