SMD Switching Diode

CDSER400B-HF

RoHS Device
Halogen Free

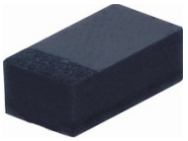

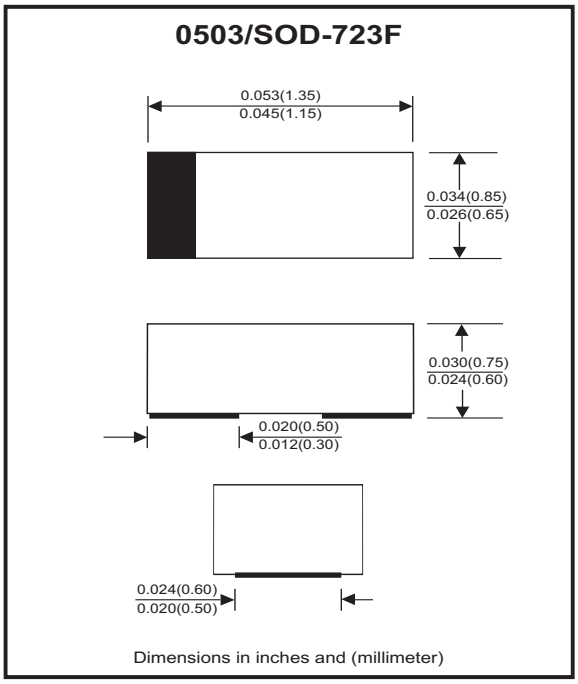

Features

- High Speed.
- Designed for mounting on small surface.
- Extremely thin/leadless package.
- Low leakage current.
- High mounting capability, strong surge withstand, high reliability.

Mechanical data

- Case: 0503/SOD-723F standard package, molded plastic.
- Terminals: Gold plated, solderable per MIL-STD-750,method 2026.
- Polarity: Indicated by cathode band.
- Mounting position: Any.
- Weight: 0.002 grams(approx.).

Circuit diagram



Maximum Rating (at T_A=25 ºC unless otherwise noted)

Parameter	Conditions	Symbol	Min	Typ	Max	Unit
Repetitive peak reverse voltage		V_{RRM}			90	V
Reverse voltage		V_R			80	V
Average forward current		I_O			100	mA
Forward current, surge peak	8.3 ms single half sine-wave superimposed on rate load (JEDEC method)	I_{FSM}		1000		mA
Repetitive peak forward current		I_{FRM}			225	mA
Power dissipation		P_D			150	mW
Operating temperature range		T_j	-40		+125	˚C
Storage temperature range		T_{STG}	-55		+125	˚C

Electrical Characteristics (at T_A=25 ºC unless otherwise noted)

Parameter	Conditions	Symbol	Min	Typ	Max	Unit
Forward voltage	I_F = 100 mA DC	V_F			1.0	V
Reverse current	V_R = 80V	I_R			0.1	uA
Capacitance between terminals	f = 1MHz, and 0.5V DC reverse voltage	C_T			3	pF
Reverse recovery time	V_R = 6V, I_F = 10mA, R_L = 50 ohms	T_{rr}			4	nS

RATING AND CHARACTERISTIC CURVES (CDSER400B-HF)

Fig.1 - Forward Characteristics

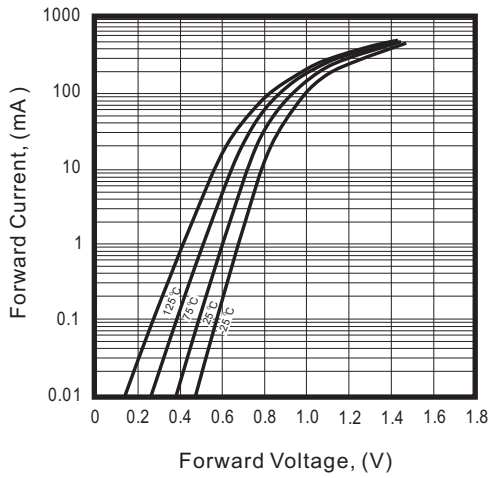

Fig.2 - Reverse Characteristics

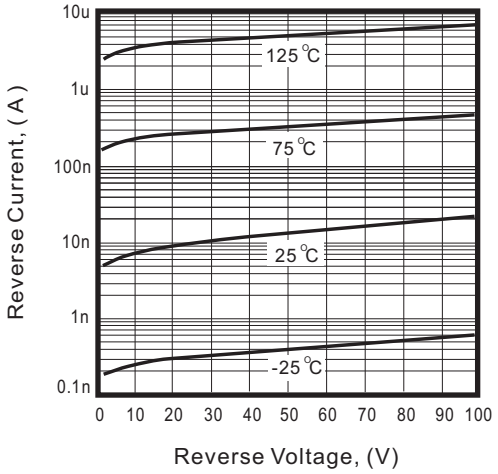

Fig.3 - Capacitance Between Terminals Characteristics

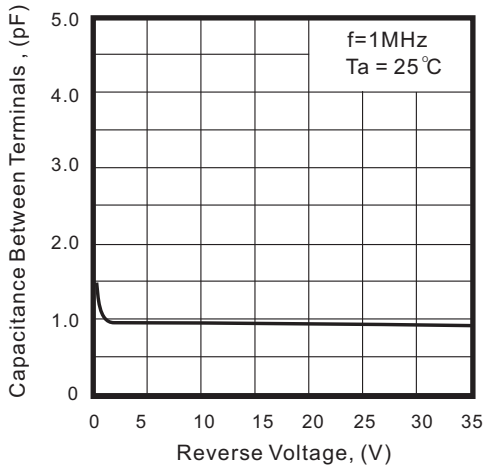

Fig.4 - Current Derating Curve

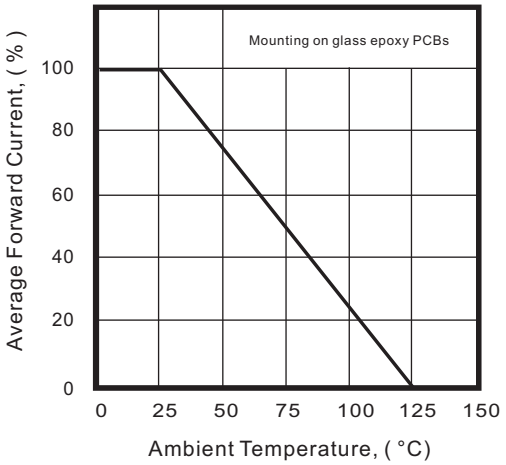

Reel Taping Specification

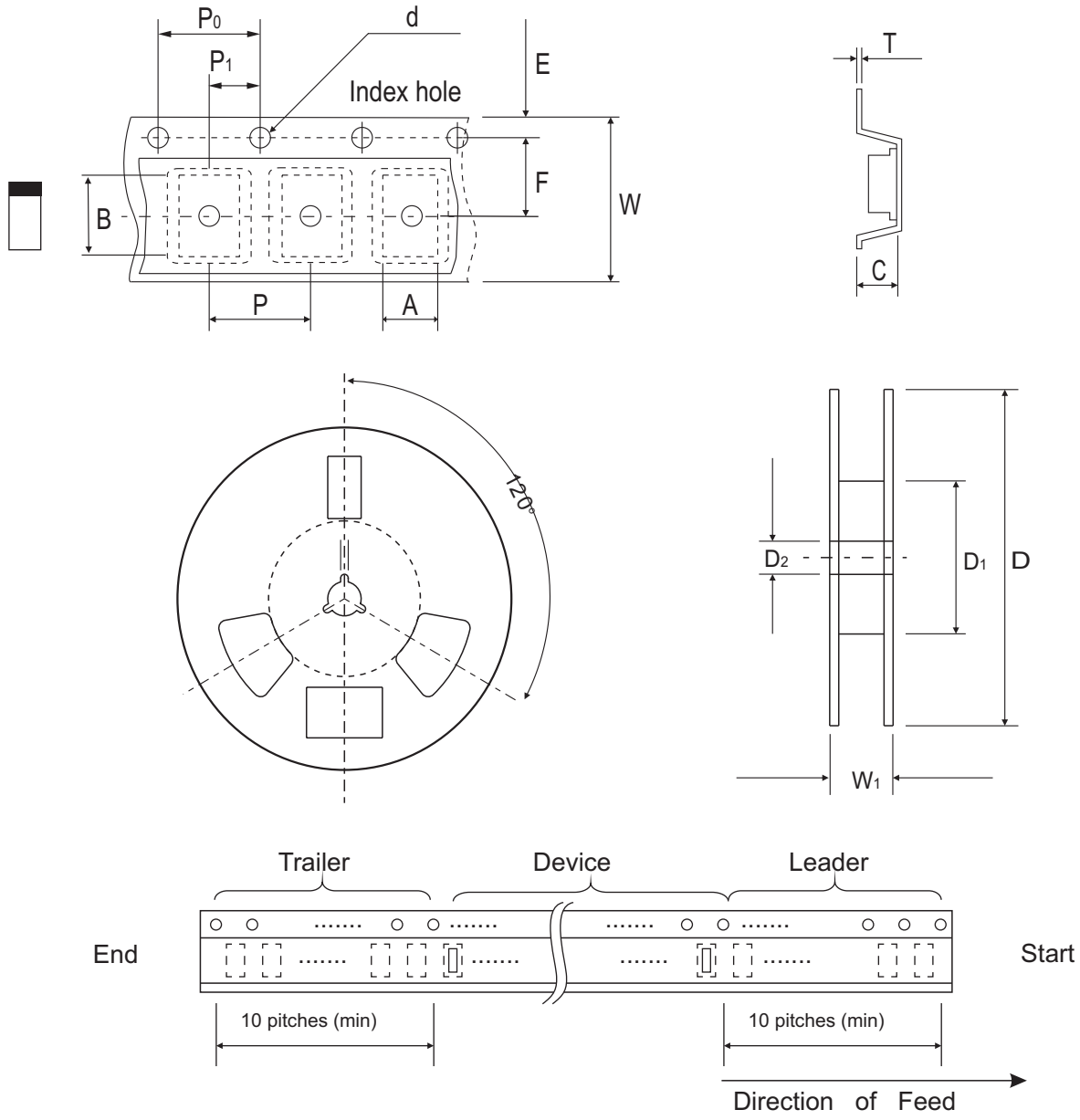

	SYMBOL	A	B	C	d	D	D_1	D_2
0503 (SOD-723F)	(mm)	0.90 ± 0.10	1.46 ± 0.10	0.80 ± 0.10	1.55 ± 0.05	178 ± 1	60.0 MIN.	13.0 ± 0.20
	(inch)	0.035 ± 0.004	0.057 ± 0.004	0.031 ± 0.004	0.061 ± 0.002	7.008 ± 0.04	2.362 MIN.	0.512 ± 0.008

	SYMBOL	E	F	P	P_0	P_1	T	W	W_1
0503 (SOD-723F)	(mm)	1.75 ± 0.10	3.50 ± 0.05	4.00 ± 0.10	4.00 ± 0.10	2.00 ± 0.05	0.22 ± 0.05	8.00 ± 0.20	13.5 MAX.
	(inch)	0.069 ± 0.004	0.138 ± 0.002	0.157 ± 0.004	0.157 ± 0.004	0.079 ±0.002	0.009 ± 0.002	0.315 ± 0.008	0.531 MAX.

Marking Code

Part Number	Marking Code
CDSER400B-HF	S4



Suggested PAD Layout

SIZE	0503/SOD-723F	
	(mm)	(inch)
A	0.85	0.033
B	0.55	0.022
C	0.85	0.033
D	1.40	0.055
E	0.30	0.012

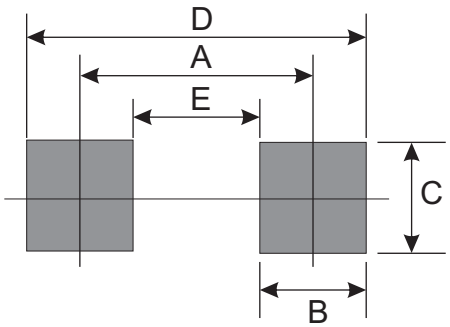

Standard Packaging

Case Type	Qty Per Reel	Reel Size
	(Pcs)	(inch)
0503/SOD-723F	4,000	7