CDSER4448-HF

Io = 125 mA
V_R = 80 Volts
RoHS Device
Halogen Free

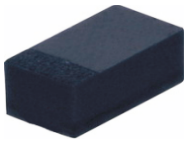

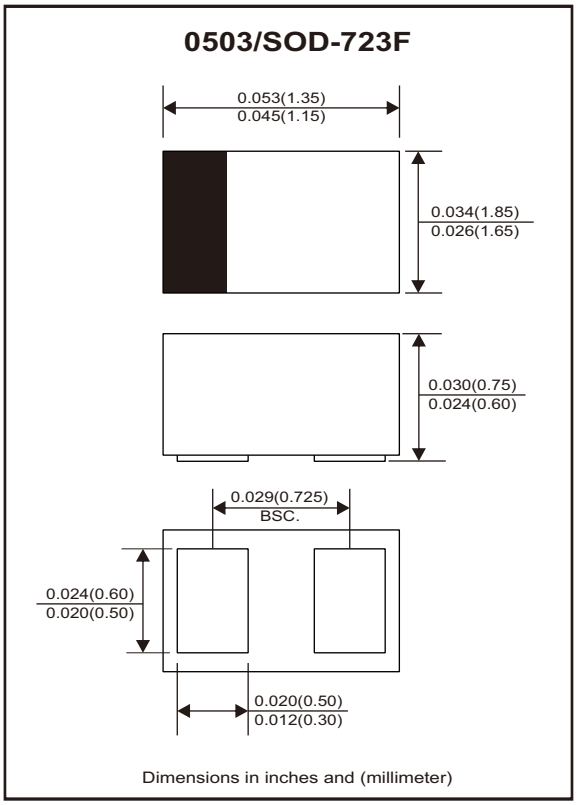

Features

- Fast switching speed
- Designed for mounting on small surface.
- Extremely thin/leadless package.

Mechanical data

- Case: 0503/SOD-723F standard package, molded plastic.
- Terminals: Gold plated, solderable per MIL-STD-750,method 2026.
- Mounting position: Any
- Weight: 0.002 gram(approx.).

Circuit Diagram



Maximum Rating (at T_A=25 °C unless otherwise noted)

Parameter	Conditions	Symbol	Min	Typ	Max	Unit
Repetitive peak reverse voltage		V_{RRM}			100	V
Reverse voltage		V_R			80	V
Average forward current		I_O			125	mA
Forward current, surge peak	Tp=1uS Tp=8.3mS	I_{FSM}			2 1	A
Power dissipation		P_D			125	mW
Operating temperature range		T_j	-40		+125	°C
Storage temperature range		T_{STG}	-40		+125	°C

Electrical Characteristics (at T_A=25 °C unless otherwise noted)

Parameter	Conditions	Symbol	Min	Typ	Max	Unit
Forward voltage	I_F = 5 mA I_F = 100 mA	V_F	0.62		0.72 1	V
Reverse current	V_R = 20V V_R = 80V	I_R			25 100	nA
Capacitance between terminals	f = 1MHz, and 0.5 VDC reverse voltage	C_T			9	pF
Reverse recovery time	I_F = I_R = 10 mA, I_{rr} = 0.1 X I_R, R_L =100 ohm	T_{rr}			9	nS

Company reserves the right to improve product design , functions and reliability without notice.

RATING AND CHARACTERISTIC CURVES (CDSER4448-HF)

Fig.1 - Forward Characteristics

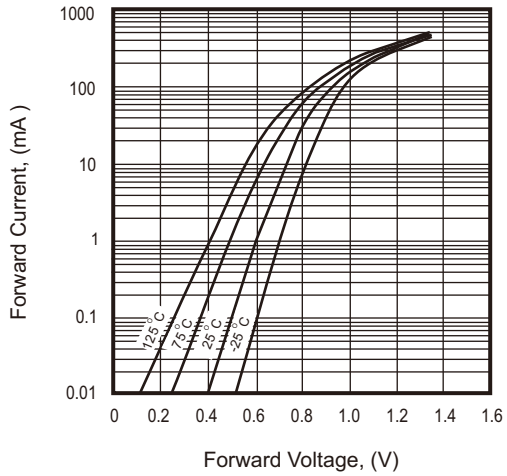

Fig.2 - Reverse Characteristics

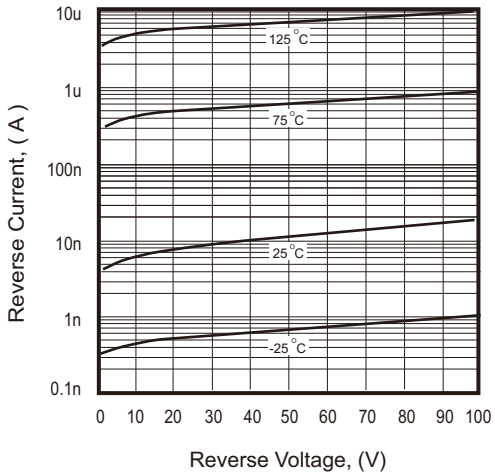

Fig.3 - Capacitance Between Terminals Characteristics

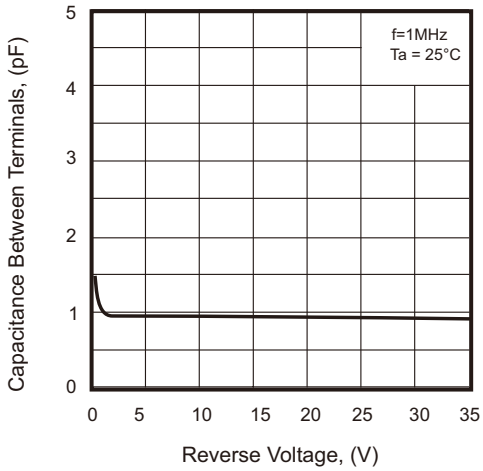

Fig.4 - Current Derating Curve

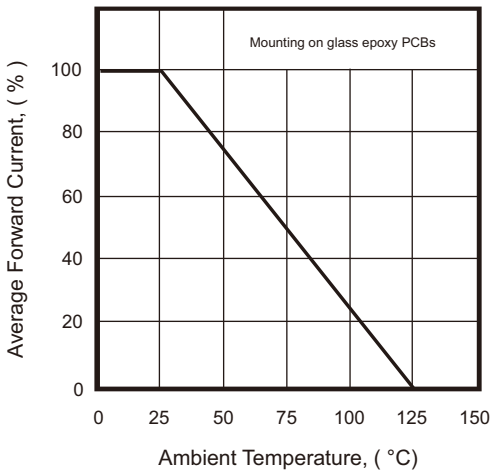

Reel Taping Specification

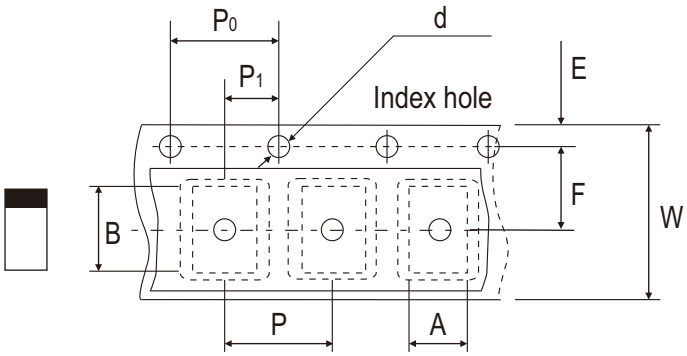

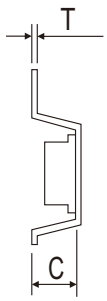

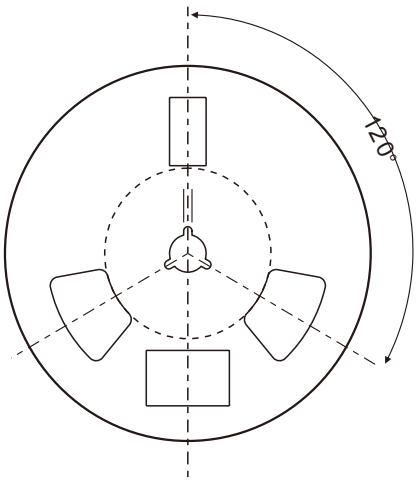

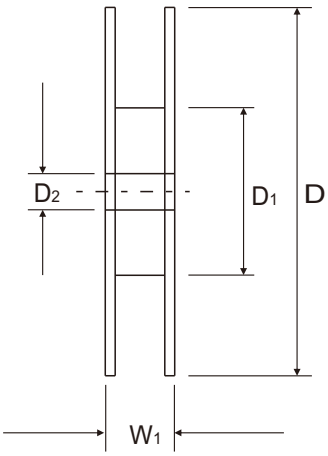

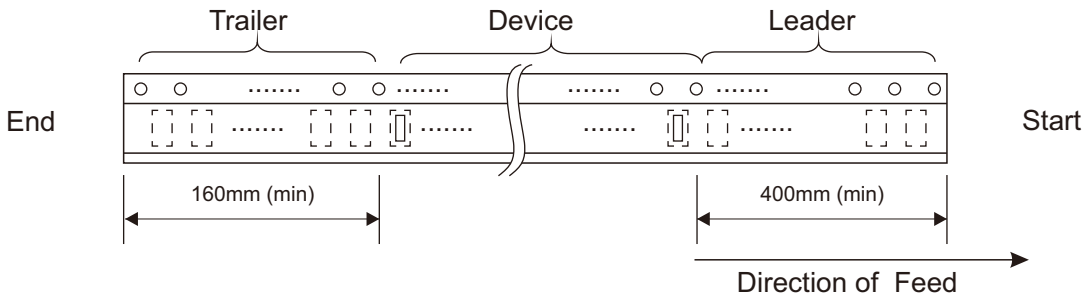

	SYMBOL	A	B	C	d	D	D_1	D_2
0503 (SOD-723F)	(mm)	0.92 ± 0.05	1.50 ± 0.05	0.87 ± 0.05	1.50 + 0.10 - 0	178.00 ± 1.00	60.00 ± 0.50	13.50 ± 0.20
	(inch)	0.046 ± 0.004	0.075 ± 0.004	0.037 ± 0.004	0.059 + 0.004 - 0	7.008 ± 0.039	2.362 ± 0.020	0.531± 0.008

	SYMBOL	E	F	P	P_0	P_1	T	W	W_1
0503 (SOD-723F)	(mm)	1.75 ± 0.10	3.50 ± 0.10	4.00 ± 0.10	4.00 ± 0.10	2.00 ± 0.10	0.23 + 0.02 - 0.05	8.00 ± 0.20	12.00 + 0.50 - 0
	(inch)	0.069 ± 0.004	0.138 ± 0.004	0.157 ± 0.004	0.157 ± 0.004	0.079 ± 0.004	0.009 + 0.001 - 0.002	0.315 ± 0.008	0.472 + 0.020 - 0

Marking Code

Part Number	Marking Code
CDSER4448-HF	S5



Suggested PAD Layout

SIZE	0503/SOD-723F	
	(mm)	(inch)
A	0.85	0.033
B	0.55	0.022
C	0.85	0.033
D	1.40	0.055
E	0.30	0.012

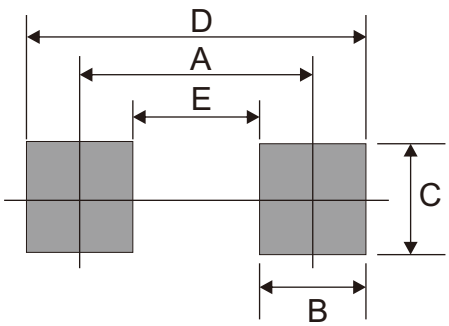

Standard Packaging

Case Type	Qty Per Reel	Reel Size
	(Pcs)	(inch)
0503/SOD-723F	4,000	7