CGRC301-G Thru. CGRC307-G

Glass Passivated Type
Reverse Voltage: 50 to 1000 Volts
Forward Current: 3.0 Amp
RoHS Device

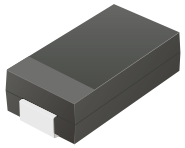

Features

-Ideal for surface mount applications.

-Easy pick and place.

-Plastic package has Underwriters Lab. flammability classification 94V-0.

-Built in strain relief.

-High surge current capability.

DO-214AB (SMC)

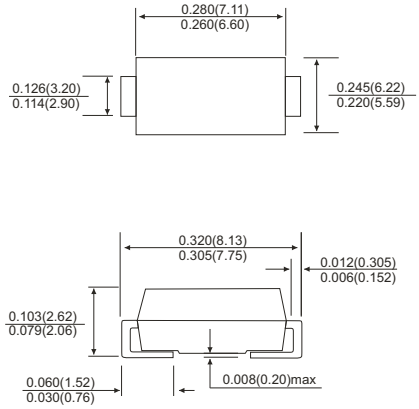

Dimensions in inches and (millimeter)

Mechanical data

-Case: JEDEC DO-214AB, molded plastic.

-Terminals: solderable per MIL-STD-750, method 2026.

-Polarity: Color band denotes cathode end.

-Approx. weight: 0.23 grams

Maximum Ratings and Electrical Characteristics

Parameter	Symbol	CGRC 301-G	CGRC 302-G	CGRC 303-G	CGRC 304-G	CGRC 305-G	CGRC 306-G	CGRC 307-G	Units
Max. repetitive peak reverse voltage	V_{RRM}	50	100	200	400	600	800	1000	V
Max. DC blocking voltage	V_{DC}	50	100	200	400	600	800	1000	V
Max. RMS voltage	V_{RMS}	35	70	140	280	420	560	700	V
Peak surge forward current, 8.3ms single half sine-wave superimposed on rate load (JEDEC method)	I_{FSM}	100							A
Max. average forward current	I_O	3.0							A
Max. instantaneous forward voltage at 3.0A	V_F	1.1							V
Max. DC reverse current at T_A=25°C rated DC blocking voltage T_A=125°C	I_R	5.0 250							μA
Max. thermal resistance (Note 1)	$R_{\theta JA}$	50							°C/W
Max. operating junction temperature	T_J	150							°C
Storage temperature	T_{STG}	-55 to +150							°C

Notes: 1. Thermal resistance from junction to terminal mounted on P.C.B. with 5.0×5.0 mm square (0.13mm thick) land area.

RATING AND CHARACTERISTIC CURVES (CGRC301-G thru CGRC307-G)

Fig.1 Reverse Characteristics

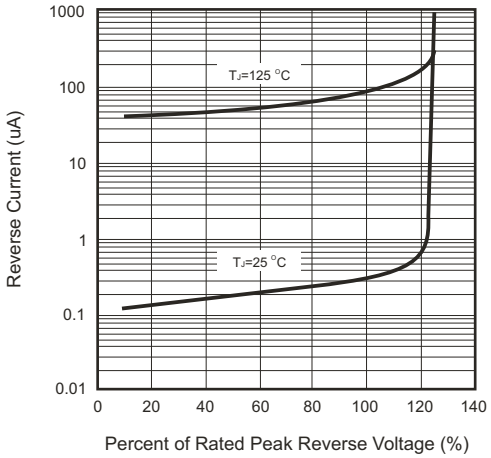

Fig.2 Forward Characteristics

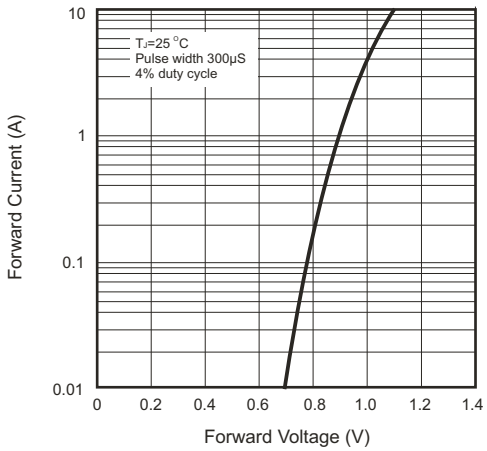

Fig.3 Junction Capacitance

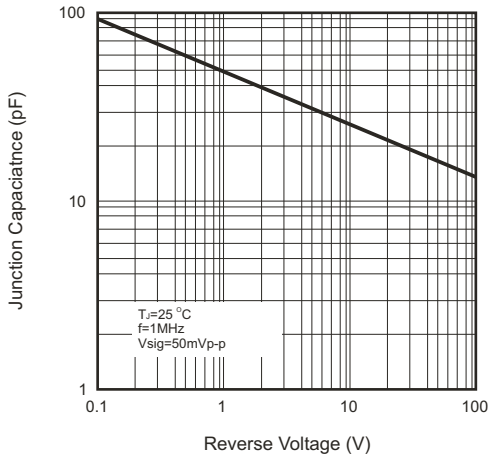

Fig.4 Current Derating Curve

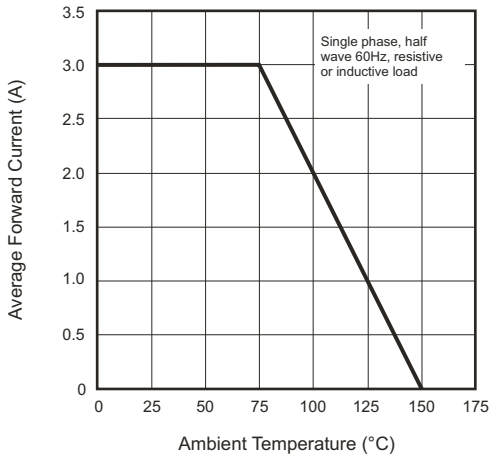

Fig.5 Non-repetitive Forward Surge Current

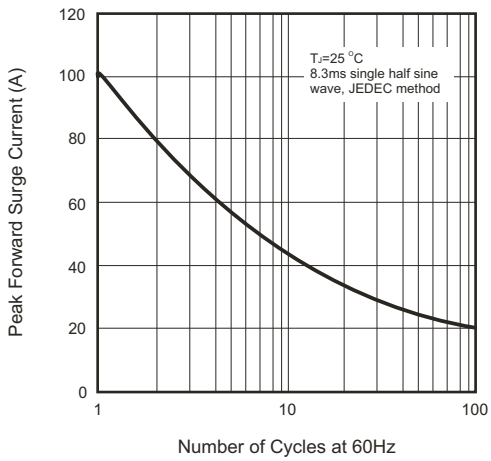

Reel Taping Specification

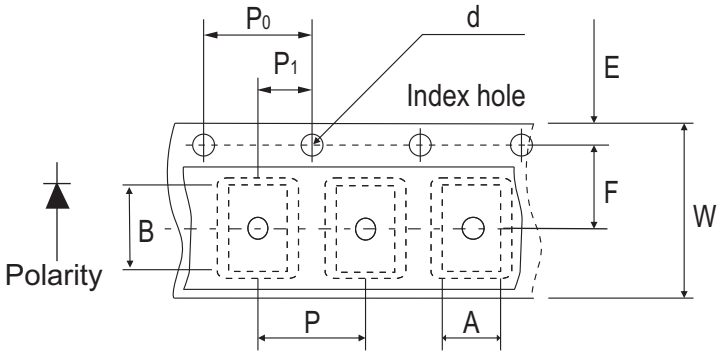

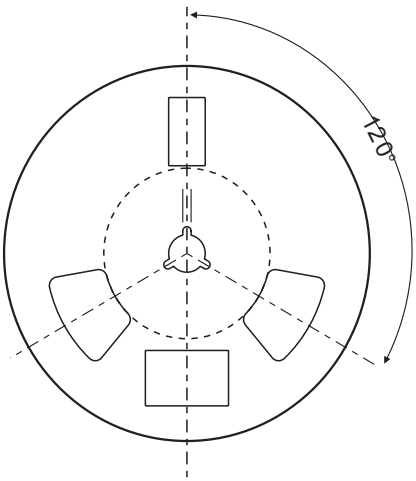

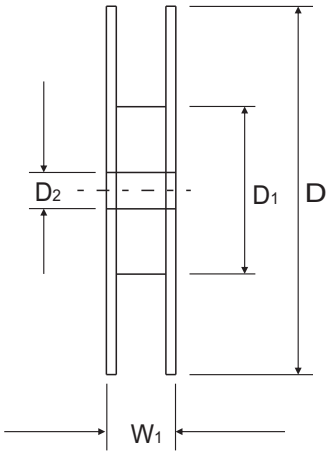

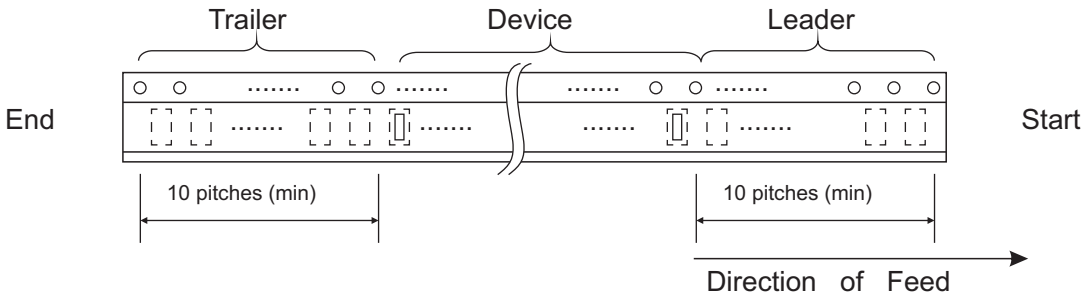

	SYMBOL	A	B	C	d	D	D1	D2
DO-214AB (SMC)	(mm)	6.3 (max)	8.6 (max)	2.9 (max)	1.50 ± 0.10	330 ± 1.00	50.0 MIN.	13.5 ± 1.00
	(inch)	0.248(max)	0.338 (max)	0.114 (max)	0.059 ± 0.004	13.00 ± 0.039	1.969 MIN.	0.531 ± 0.039

	SYMBOL	E	F	P	P0	P1	W	W1
DO-214AB (SMC)	(mm)	1.75 ± 0.10	7.50 ± 0.05	8.00 ± 0.10	4.00 ± 0.10	2.00 ± 0.05	16.0 ± 0.20	22.4 MAX.
	(inch)	0.689 ± 0.004	0.295 ± 0.002	0.314 ± 0.004	0.157 ± 0.004	0.079 ± 0.002	0.629 ± 0.008	0.882 MAX

Marking Code

Park Number	Marking Code
CGRC301-G thru CGRC307-G	301 thru 307



Suggested PAD Layout

SIZE	DO-214AB (SMC)	
	(mm)	(inch)
A	6.20	0.244
B	1.60	0.063
C	4.80	0.189
D	7.80	1.441
E	4.6	0.181

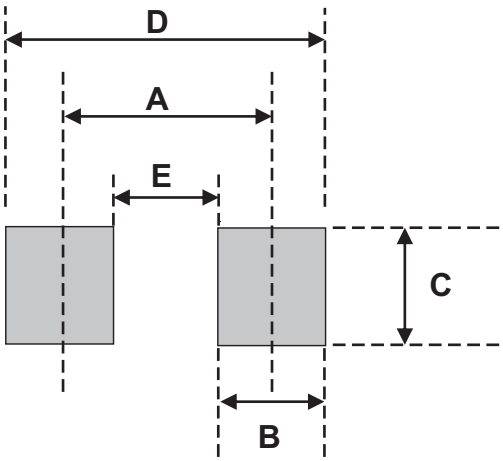

Standard Packaging

Case Type	Qty per Reel	Reel Size
	(Pcs)	(inch)
DO-214AB (SMC)	3,000	13