DB101S-G Thru. DB107S-G

Reverse Voltage: 50 to 1000V
Forward Current: 1.0A
RoHS Device

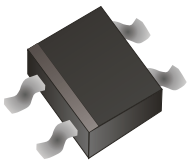

Features

-Rating to 1000V PRV.

-Ideal for printed circuit board.

-Low forward voltage drop.

-High current capability.

-The plastic material has UL flammability classification 94V-0

-UL recognized file # E349301

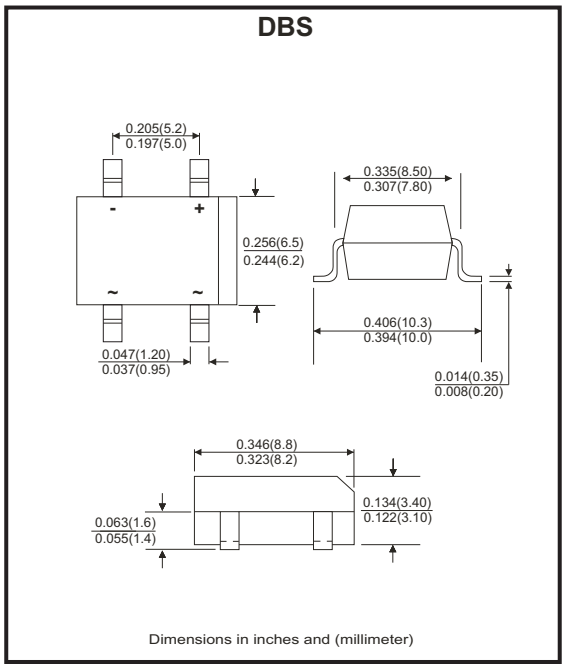

Mechanical Data

-Polarity: As marked on Body.

-Weight: 0.38 grams.

-Mounting position: Any.

Maximum ratings and electrical characteristics

Rating at 25°C ambient temperature unless otherwise specified.
Single phase, half wave ,60Hz, resistive or inductive load.
For capacitive load, derate current by 20%

Parameter	Symbol	DB 101S-G	DB 102S-G	DB 103S-G	DB 104S-G	DB 105S-G	DB 106S-G	DB 107S-G	Unit
Maximum Recurrent Peak Reverse Voltage	V_{RRM}	50	100	200	400	600	800	1000	V
Maximum RMS Voltage	V_{RMS}	35	70	140	280	420	560	700	V
Maximum DC Blocking Voltage	V_{DC}	50	100	200	400	600	800	1000	V
Maximum Average Forward Rectified Current @T_A=40°C	$I_{(AV)}$	1.0							A
Peak Forward Surge Current, 8.3ms Single Half Sine-Wave Super Imposed On Rated Load (JEDEC Method)	I_{FSM}	30							A
Maximum Forward Voltage at 1.0A DC	V_F	1.1							V
Maximum DC Reverse Current @T_J=25°C At Rated DC Blocking Voltage @T_J=125°C	I_R	10.0 500							μA
I^2T Rating for Fusing (t<8.3ms)	I^2t	3.735							A^2s
Typical Junction Capacitance Per Element (Note 1)	C_J	25							pF
Typical Thermal Resistance (Note 2)	$R_{\theta JA}$	40							°C/W
Operating Temperature Range	T_J	-55 to +150							°C
Storage Temperature Range	T_{STG}	-55 to +150							°C

Notes:

1. Measured at 1.0MHz and applied reverse voltage of 4.0V DC.
2. Thermal resistance from junction to ambient mounted on P.C.B with 0.5"×0.5" (13×13mm) copper pads.

Company reserves the right to improve product design , functions and reliability without notice.

Rating and Characteristics Curves (DB101S-G Thru. DB107S-G)

Fig.1 - Forward Current Derating Curve

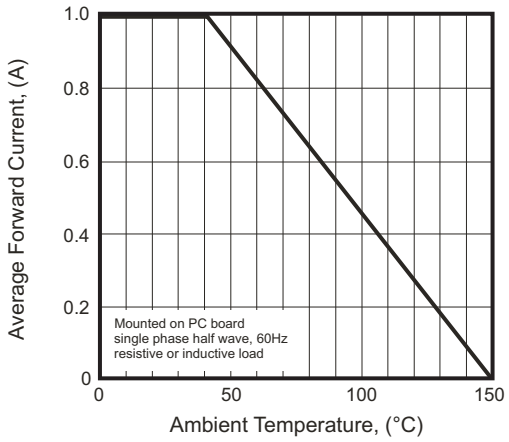

Fig.2 - Max. Non-repetitive Surge Current

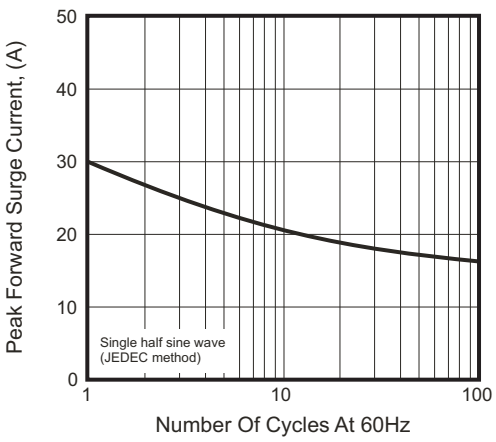

Fig.3 - Typical Junction Capacitance

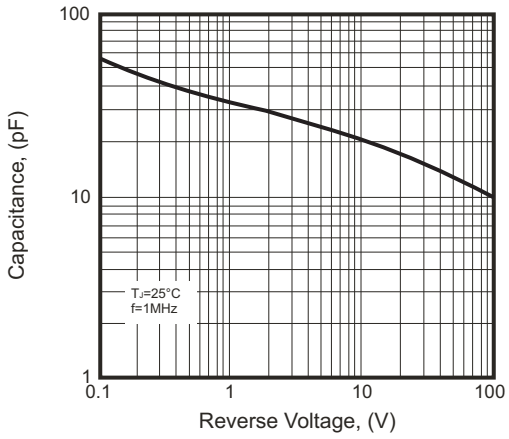

Fig.4 - Typical Forward Characteristics

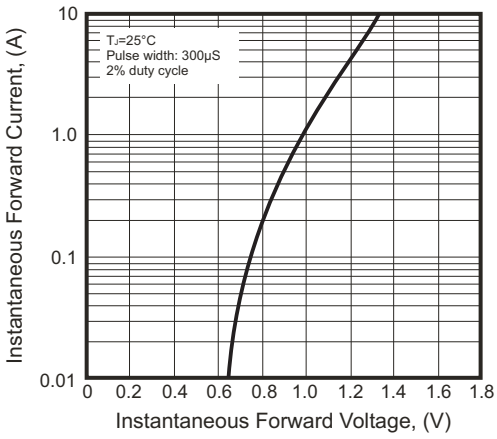

Fig.5 - Typical Reverse Characteristics

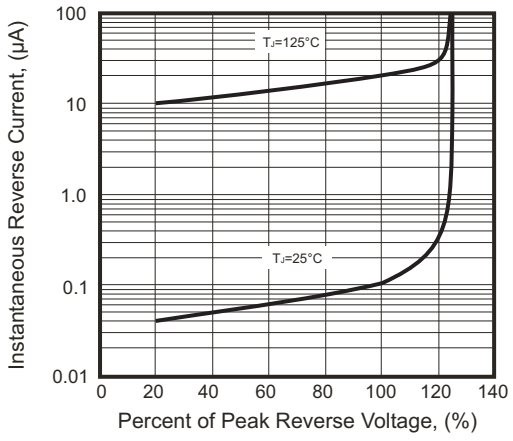

Company reserves the right to improve product design , functions and reliability without notice.

Reel Taping Specification

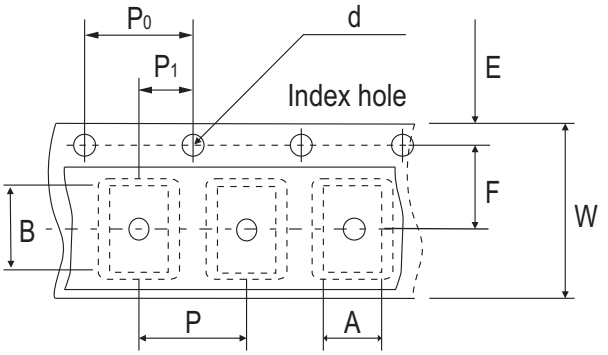

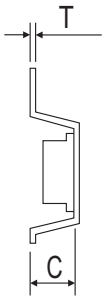

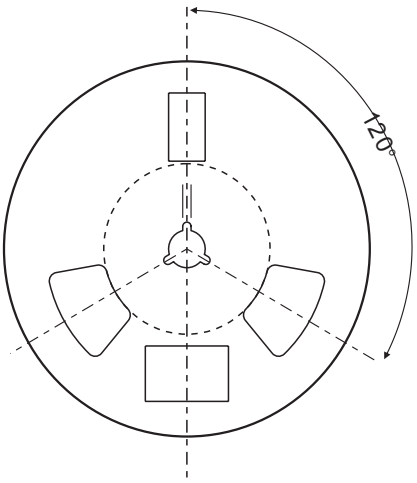

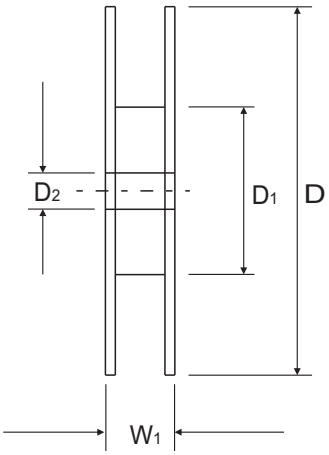

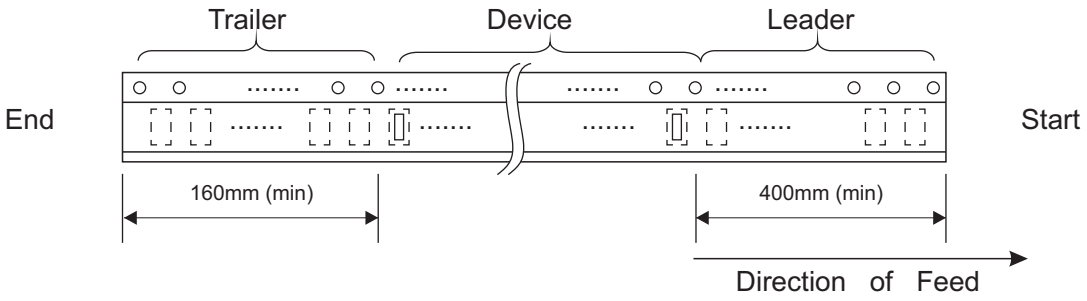

	SYMBOL	A	B	C	d	D	D_1	D_2
DBS	(mm)	8.64 ± 0.10	10.41 ± 0.10	3.81 ± 0.10	1.55 ± 0.05	330	50.0 MIN.	13.00 ± 0.20
	(inch)	0.340 ± 0.004	0.409 ± 0.004	0.150 ± 0.004	0.061 ± 0.002	13	1.969 MIN.	0.512 ± 0.008

	SYMBOL	E	F	P	P_0	P_1	T	W	W_1
DBS	(mm)	1.75 ± 0.10	7.50 ± 0.05	12.00 ± 0.10	4.00 ± 0.10	2.00 ± 0.10	0.32	16.00 ± 0.30	16.00~18.40
	(inch)	0.069 ± 0.004	0.295 ± 0.002	0.472 ± 0.004	0.157 ± 0.004	0.079 ± 0.004	0.013	0.630 ± 0.012	0.630~0.724

Company reserves the right to improve product design , functions and reliability without notice.

Marking Code

Part Number	Marking code	Packaging
DB101SP-G	DB101S	Tube
DB102SP-G	DB102S	Tube
DB103SP-G	DB103S	Tube
DB104SP-G	DB104S	Tube
DB105SP-G	DB105S	Tube
DB106SP-G	DB106S	Tube
DB107SP-G	DB107S	Tube
DB101ST-G	DB101S	Reel
DB102ST-G	DB102S	Reel
DB103ST-G	DB103S	Reel
DB104ST-G	DB104S	Reel
DB105ST-G	DB105S	Reel
DB106ST-G	DB106S	Reel
DB107ST-G	DB107S	Reel

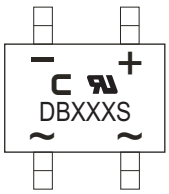

XXX = Product type marking code
⊂ = Comchip Logo

Note:
1) Suffix code after part number to specify packaging item .

Packaging	Code
TUBE PACK	P
REEL PACK	T

Suggested PAD Layout

SIZE	DBS	
	(mm)	(inch)
A	1.20 Min	0.047 Min
B	1.52 Min	0.060 Min
C	5.21 Ref	0.205 Ref
D	10.26 Max	0.404 Max

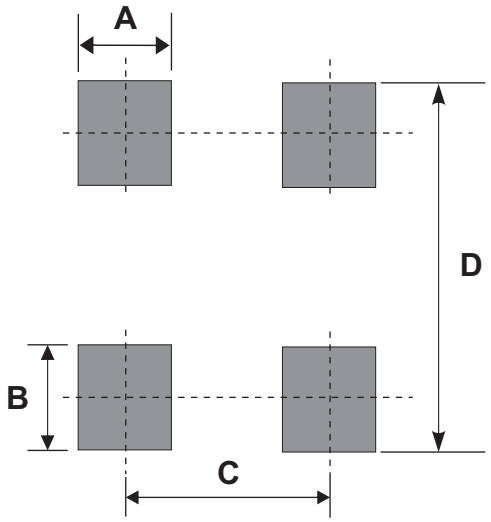

Standard Packaging

Case Type	TUBE PACK	
	TUBE (pcs)	BOX (pcs)
DBS	50	5,000

Case Type	REEL PACK	
	REEL (pcs)	Reel Size (inch)
DBS	1,000	13

Company reserves the right to improve product design , functions and reliability without notice.