FR101-G Thru. FR107-G

Voltage: 50 to 1000 V
Current: 1.0 A
RoHS Device



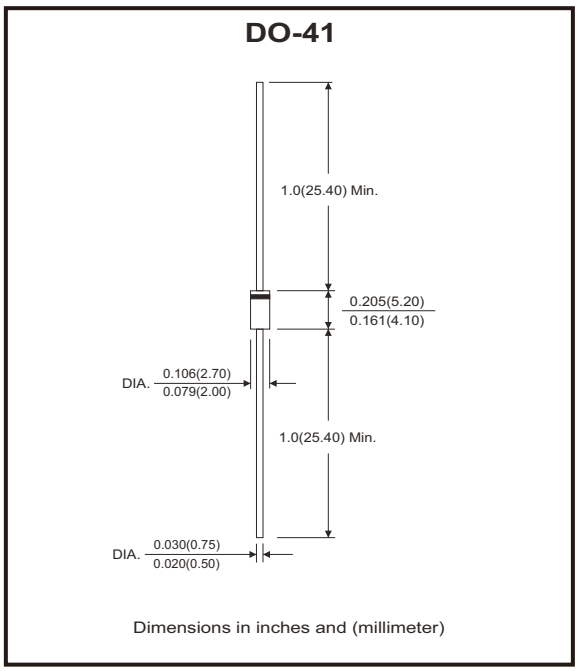

Features

- Fast switching for high efficiency.
- Diffused junction.
- Low reverse leakage current.
- Low forward voltage drop
- High current capability.

Mechanical data

- Case: JEDEC DO-41 molded plastic
- Epoxy: UL 94V-0 rate flame retardant
- Polarity: Color band denotes cathode
- Lead: Plated axial lead, solderable per MIL-STD-750, method 2026.
- Mounting position: Any

Circuit Diagram



Maximum Ratings (at T_A=25°Cunless otherwise noted)

Single phase, half wave, 60Hz, resistive or inductive load.
For capacitive load derate current by 20%.

Parameter	Symbol	FR101 -G	FR102 -G	FR103 -G	FR104 -G	FR105 -G	FR106 -G	FR107 -G	Unit
Maximum repetitive peak reverse voltage	V_{RRM}	50	100	200	400	600	800	1000	V
Maximum RMS voltage	V_{RMS}	35	70	140	280	420	560	700	V
Maximum DC blocking voltage	V_{DC}	50	100	200	400	600	800	1000	V
Maximum average forward rectified current @T_A=75°C	$I_{(AV)}$	1.0							A
Peak forward surge current, 8.3ms single half sine-wave superimposed on rated load (JEDEC method)	I_{FSM}	30							A
Maximum reverse recovery time (Note 1)	t_{rr}	150				250	500		nS
Operating temperature range	T_J	-55 ~ +150							°C
Storage temperature range	T_{STG}	-55 ~ +150							°C

Notes: 1. Measured with I_F=0.5A, I_R=1A, I_{RR}=0.25A.

Electrical Characteristics (at T_A=25°C unless otherwise noted)

Parameter	Conditions		Symbol	Min	Typ	Max	Unit
Forward voltage	I_F = 1.0A DC		V_F			1.3	V
DC reverse current at rated DC blocking voltage	T_J = 25°C		I_R			5.0	μA
	T_J = 100°C					100	
Junction capacitance	V_R = 4V, f = 1.0MHz	FR101-G/FR102-G FR103-G/FR104-G	C_J		25		pF
		FR105-G/ FR106-G FR107-G	C_J		15		pF
Thermal resistance	Junction to ambient		$R_{\theta JA}$		25		°C/W

RATING AND CHARACTERISTIC CURVES (FR101-G Thru. FR107-G)

Fig.1 - Forward Current Derating Curve

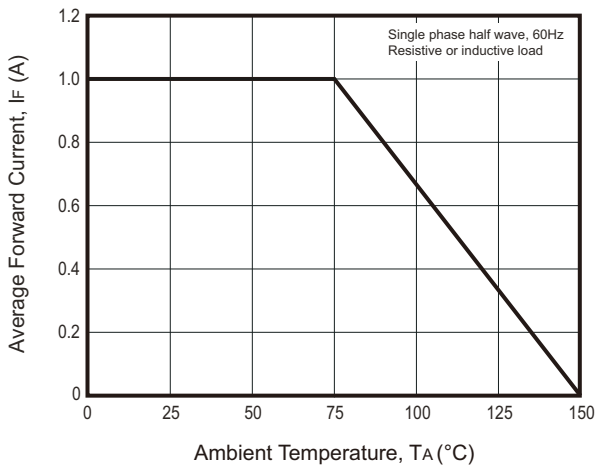

Fig.2 - Maximum Non-repetitive Surge Current

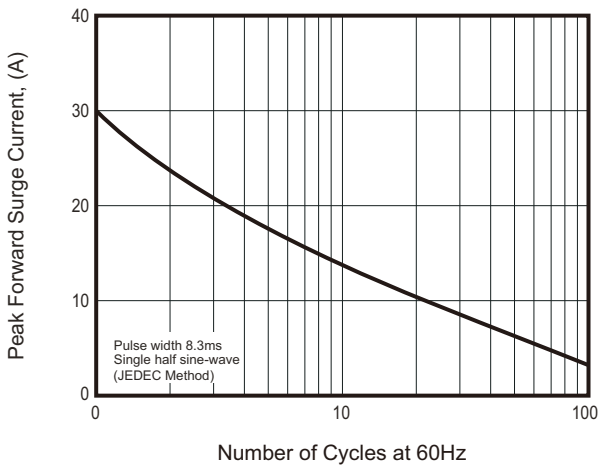

Fig.3 - Typical Junction Capacitance

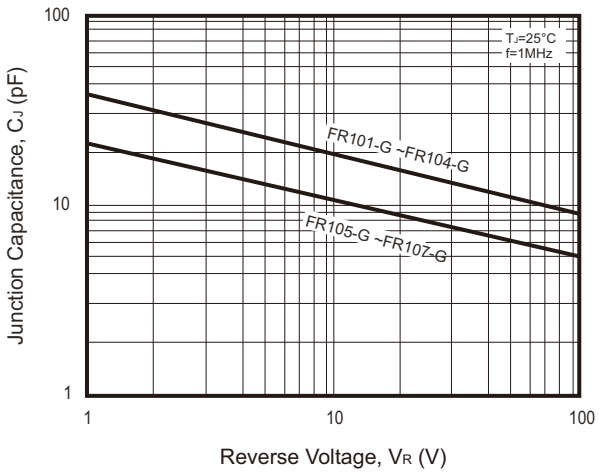

Fig.4 - Typical Forward Characteristics

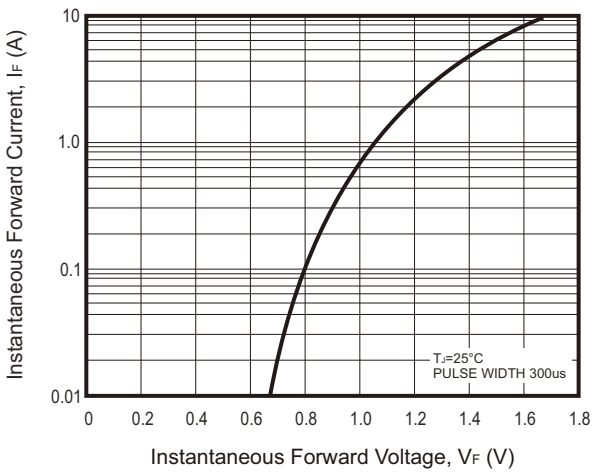

Taping Specification For Axial Lead Diodes

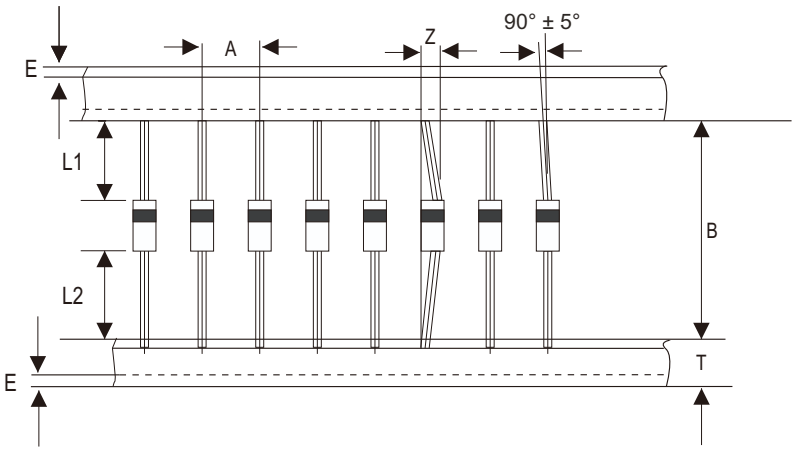

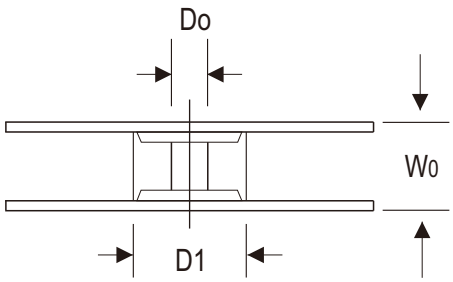

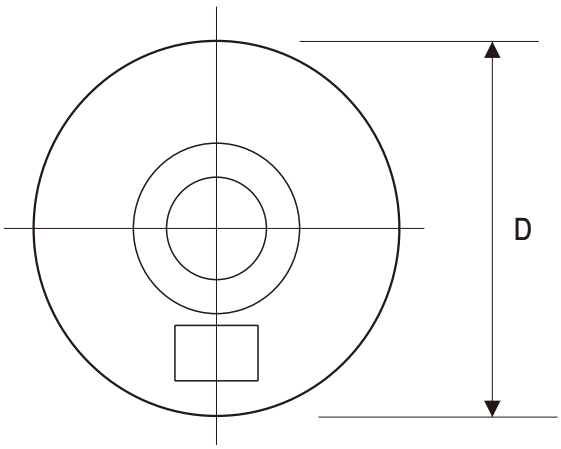

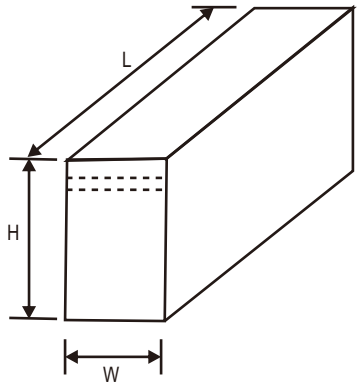

	SYMBOL	A	B	Z	T	E	|L1-L2|
DO-41	(mm)	5.00 ± 0.50	52.40 + 1.50 − 0.40	1.20 (max)	6.00 ± 0.40	0.80 (max)	1.00 (max)
	(inch)	0.197 ± 0.020	2.063 + 0.059 − 0.016	0.047 (max)	0.236 ± 0.016	0.031 (max)	0.039 (max)

	SYMBOL	D_1	D_0	D	W_0	L	W	H
DO-41	(mm)	85.70 ± 0.30	16.60 ± 0.40	330.00	79.00 ± 1.00	255.00 ± 5.00	75.00 ± 5.00	150.00 ± 5.00
	(inch)	3.374 ± 0.012	0.654 ± 0.016	12.992	3.110 ± 0.039	10.039 ± 0.197	2.953 ± 0.197	5.906 ± 0.197

Marking Code

Part Number	Marking code	Packaging
FR101A-G	FR101	AMMO
FR102A-G	FR102	AMMO
FR103A-G	FR103	AMMO
FR104A-G	FR104	AMMO
FR105A-G	FR105	AMMO
FR106A-G	FR106	AMMO
FR107A-G	FR107	AMMO
FR101T-G	FR101	REEL
FR102T-G	FR102	REEL
FR103T-G	FR103	REEL
FR104T-G	FR104	REEL
FR105T-G	FR105	REEL
FR106T-G	FR106	REEL
FR107T-G	FR107	REEL
FR101B-G	FR101	BULK
FR102B-G	FR102	BULK
FR103B-G	FR103	BULK
FR104B-G	FR104	BULK
FR105B-G	FR105	BULK
FR106B-G	FR106	BULK
FR107B-G	FR107	BULK



XXX = Product type marking code

Note:

1) Suffix code after part number to specify packaging item .

Packaging	Code
AMMO PACK	A
REEL PACK	T
BULK PACK	B

Standard Packaging

Case Type	AMMO PACK
	BOX (pcs)
DO-41	5,000

Case Type	REEL PACK	
	REEL (pcs)	Reel Size (inch)
DO-41	5,000	13

Case Type	BULK PACK
	BOX (pcs)
DO-41	1,000