# Fast Recovery Rectifier

COMCHIP
SMD DIODE SPECIALIST

## FR601-G thru FR607-G (RoHS Device)

**Voltage Range 50 to 1000 V**
**Current 6.0 Ampere**

**Features**

- ✶ Fast switching for high efficiency
- ✶ Low forward voltage drop
- ✶ High current capability
- ✶ Low reverse leakage current
- ✶ High surge current capability

**Mechanical Data**

- ✶ Case: Molded plastic P600
- ✶ Epoxy: UL 94V-0 rate flame retardant
- ✶ Terminals: Solderable per MIL-STD-202 method 208
- ✶ Polarity:Color band denotes cathode
- ✶ Mounting position: Any
- ✶ Weight: 2.1 grams

**P600**

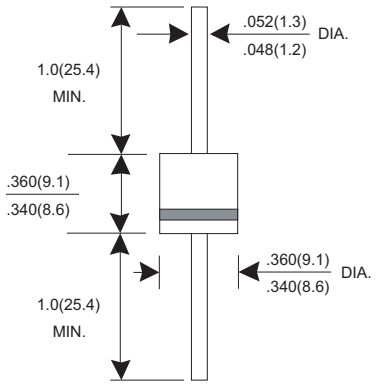


Dimensions in inches and (millimeters)

### MAXIMUM RATINGS AND ELECTRICAL CHARACTERISTICS

Rating at 25°C ambient temperature unless otherwise specified.
Single phase, half wave, 60Hz, resistive or inductive load.
For capacitive load, derate current by 20%.

| | SYMBOL | FR601 -G | FR602 -G | FR603 -G | FR604 -G | FR605 -G | FR606 -G | FR607 -G | UNIT |
|---|---|---|---|---|---|---|---|---|---|
| Maximum Recurrent Peak Reverse Voltage | $V_{RRM}$ | 50 | 100 | 200 | 400 | 600 | 800 | 1000 | V |
| Maximum RMS Voltage | $V_{RMS}$ | 35 | 70 | 140 | 280 | 420 | 560 | 700 | V |
| Maximum DC Blocking Voltage | $V_{DC}$ | 50 | 100 | 200 | 400 | 600 | 800 | 1000 | V |
| Maximum Average Forward Rectified Current $T_L$=55°C | $I_{F(AV)}$ | 6.0 | | | | | | | A |
| Peak Forward Surge Current, 8.3ms single Half sine-wave superimposed on rated load (JEDEC method) | $I_{FSM}$ | 300 | | | | | | | A |
| Maximum Instantaneous Forward Voltage @ 6.0 A | $V_F$ | 1.3 | | | | | | | V |
| Maximum DC Reverse Current @$T_J$=25°C<br>At Rated DC Blocking Voltage @$T_J$=100°C | $I_R$ | 5.0<br>500 | | | | | | | uA<br>uA |
| Maximum Reverse Recovery Time (Note 1) | Trr | 150 | | | | 250 | 500 | | nS |
| Typical junction Capacitance (Note 2) | $C_J$ | 100 | | | | | | | pF |
| Maximum Thermal Resistance (Note 3) | $R_{\theta JA}$ | 55 | | | | | | | °CW |
| Operating Junction and Storage Temperature Range | $T_J$, $T_{STG}$ | -55 to + 125 | | | | | | | °C |

NOTES : (1) Reverse recovery test conditions $I_F$ = 0.5A, $I_R$ = 1.0A, Irr = 0.25A.
(2) Measured at 1.0 MHz and applied reverse voltage of 4.0 Volts DC.
(3) Thermal Resistance junction to lead.

"**-G**" suffix designates RoHS compliant Version

# Fast Recovery Rectifier

FR601-G thru FR607-G (RoHS Device)

## RATINGS AND CHARACTERISTIC CURVES FR601-G THRU FR607-G

FIG.1 - FORWARD CURRENT DERATING CURVE

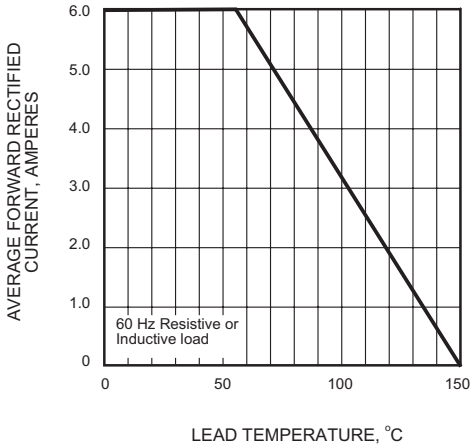


FIG.2 - MAXIMUM NON-REPETITIVE PEAK FORWARD SURGE CURRENT

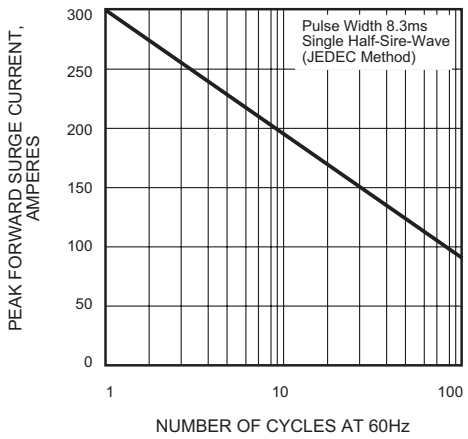


FIG.3 - TYPICAL INSTANTANEOUS FORWARD CHARACTERISTICS

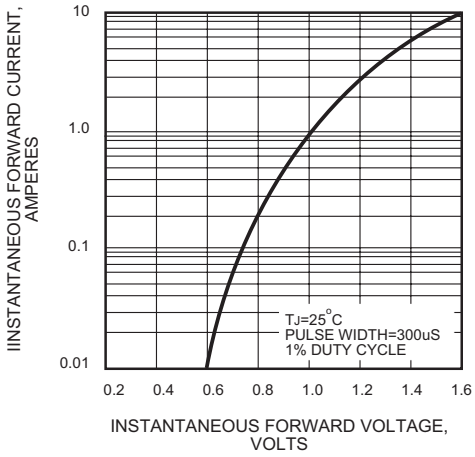


FIG.4 - TYPICAL REVERSE CHARACTERISTICS

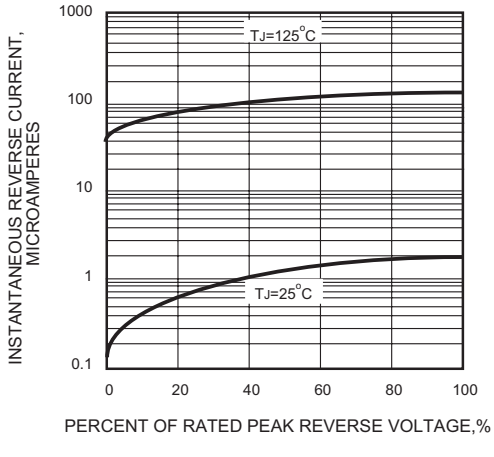


FIG.5 - TYPICAL JUNCTION CAPACITANCE

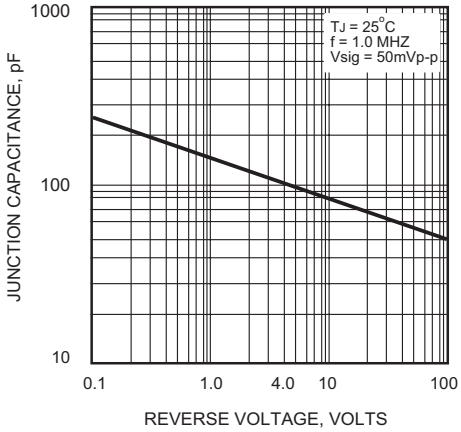


"**-G**" suffix designates RoHS compliant Version