MMBD4448HT/HTA/HTC/HTS-HF

RoHS Device
Halogen Free

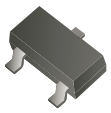

Features

- Ultra-small surface mount package.
- Fast switching speed.
- For general purpose switching applications.
- High conductance.

SOT-523

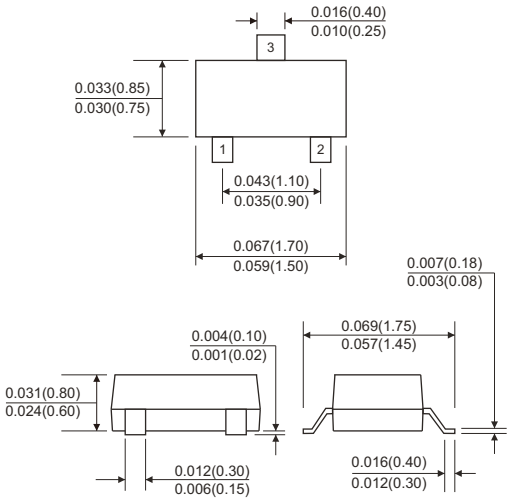

Dimensions in inches and (millimeter)

Mechanical data

- Case: SOT-523 package, molded plastic.
- Mounting position: Any.

Circuit Diagram

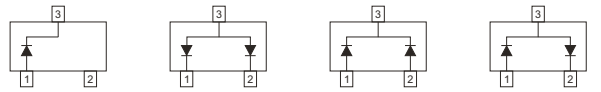

MMBD4448HT-HF MMBD4448HTA-HF MMBD4448HTC-HF MMBD4448HTS-HF

Maximum Ratings (at TA=25°C unless otherwise noted)

Parameter	Symbol	Value	Unit
Non-repetitive peak reverse voltage	V_{RM}	100	V
Peak repetitive reverse voltage Working peak reverse voltage DC blocking voltage	V_{RRM} V_{RWM} V_R	85	V
RMS reverse voltage	V_{RMS}	57	V
Peak rectified output current	I_O	250	mA
Non-repetitive peak forward surge current @ t=8.3ms	I_{FSM}	2	A
Power dissipation	P_D	150	mW
Thermal resistance from junction to ambient	$R_{\theta JA}$	833	°C/W
Junction and storage temperature range	T_J, T_{STG}	-65 to +150	°C

Electrical Characteristics (at TA=25°C unless otherwise noted)

Parameter	Symbol	Conditions	Min.	Typ.	Max.	Unit
Reverse breakdown voltage	$V_{(BR)}$	I_R = 2.5μA	80			V
Leakage current	I_{R1}	V_R = 70V			0.1	μA
	I_{R2}	V_R = 20V			25	nA
Forward voltage	V_{F1}	I_F = 5mA	0.62		0.72	V
	V_{F2}	I_F = 10mA			0.855	
	V_{F3}	I_F = 100mA			1.0	
	V_{F4}	I_F = 150mA			1.25	
Typical total Capacitance	C_T	V_R = 6V, f = 1MHz			3.5	pF
Reverse recovery time	T_{rr}	V_R = 6V, I_F = 5mA			4	ns

Typical Rating and Characteristic Curves (MMBD4448HT/HTA/HTC/HTS-HF)

Fig.1 - Typical Forward Characteristics

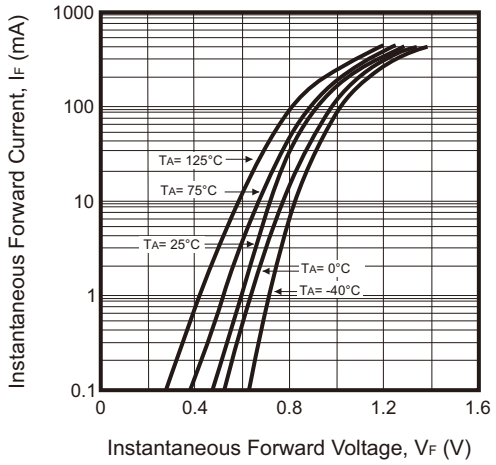

Fig.2 - Typical Reverse Characteristics

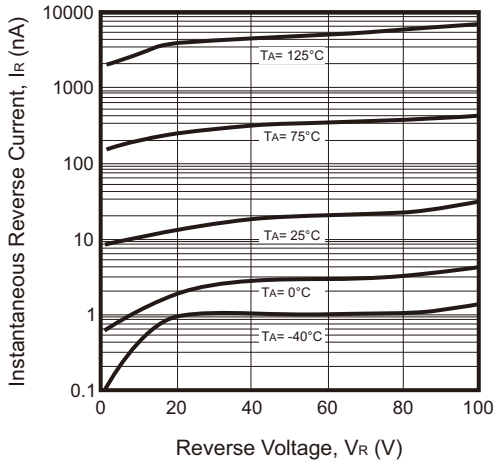

Fig.3 - Typical Capacitance vs. Reverse Voltage

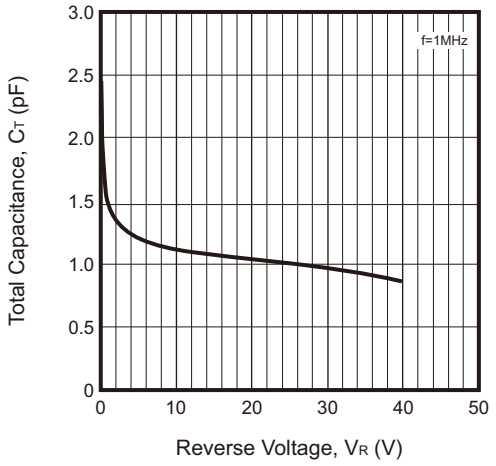

Fig.4 - Power Derating Curve, Total package

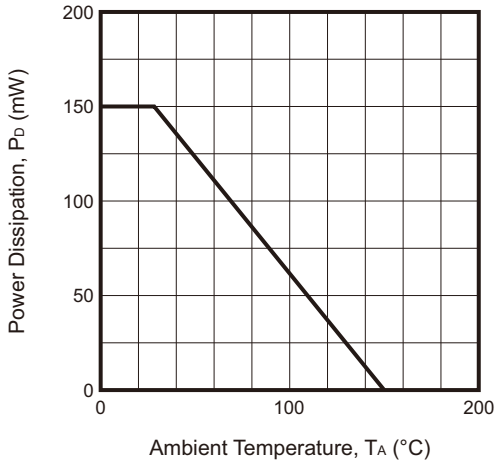

Reel Taping Specification

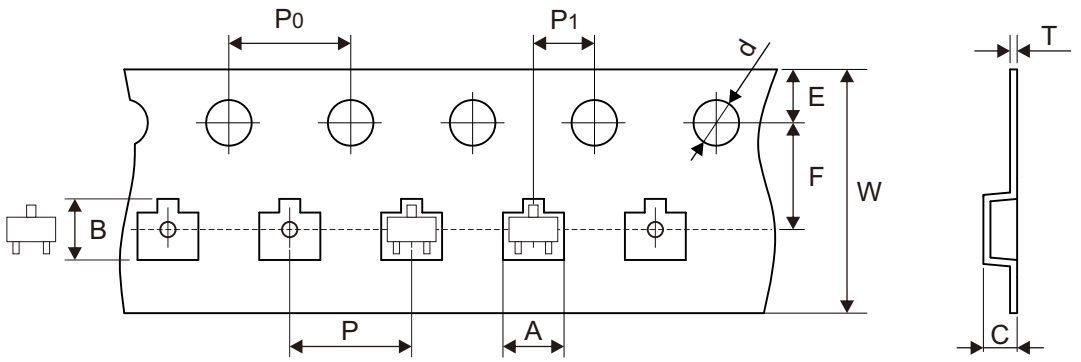

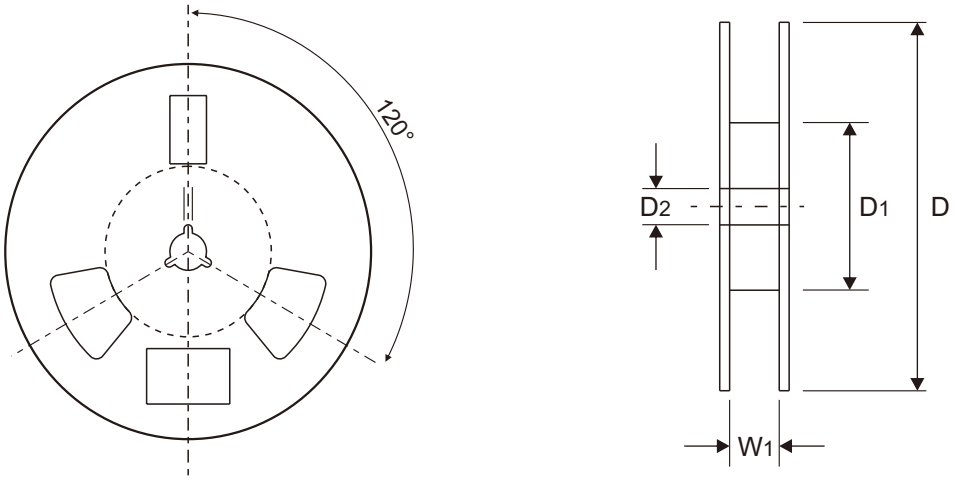

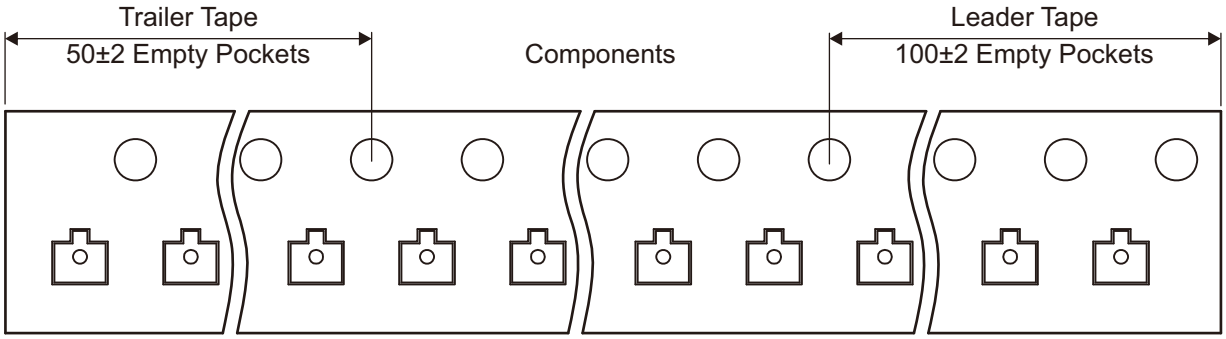

	SYMBOL	A	B	C	d	D	D1	D2
SOT-523	(mm)	1.85 ± 0.05	1.85 ± 0.05	0.875 ± 0.05	1.50 ± 0.10	178.00 ± 1.00	54.00 ± 0.50	13.00 ± 0.50
	(inch)	0.073 ± 0.002	0.073 ± 0.002	0.034 ± 0.002	0.059 ± 0.004	7.008 ± 0.039	2.126 ± 0.020	0.512 ± 0.020

	SYMBOL	E	F	P	P0	P1	T	W	W1
SOT-523	(mm)	1.75 ± 0.10	3.50 ± 0.05	4.00 ± 0.10	4.00 ± 0.10	2.00 ± 0.05	0.229 ± 0.02	8.00 + 0.30 − 0.10	9.50 ± 1.00
	(inch)	0.069 ± 0.004	0.138 ± 0.002	0.157 ± 0.004	0.157 ± 0.004	0.079 ± 0.002	0.009 ± 0.001	0.315 + 0.012 − 0.004	0.374 ± 0.039

Marking Code

Part Number	Marking Code
MMBD4448HT-HF	A3
MMBD4448HTA-HF	A6
MMBD4448HTC-HF	A7
MMBD4448HTS-HF	AB

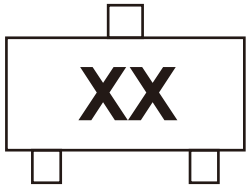

xx = Product type marking code

Suggested P.C.B. PAD Layout

SIZE	SOT-523	
	(mm)	(inch)
A	0.356	0.014
B	0.508	0.020
C	1.00	0.039
D	0.787	0.031
E	1.803	0.071

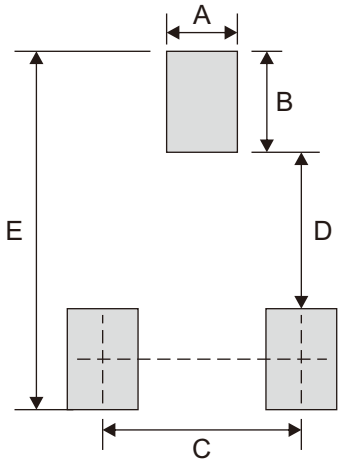

Standard Packaging

Case Type	REEL PACK	
	REEL (pcs)	Reel Size (inch)
SOT-523	3,000	7