S2T-HF Thru. S2Y-HF

Reverse Voltage: 1300 to 2000 V
Forward Current: 1.5 A
RoHS Device
Halogen Free

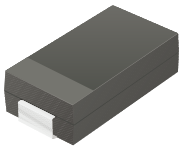

SMB/DO-214AA

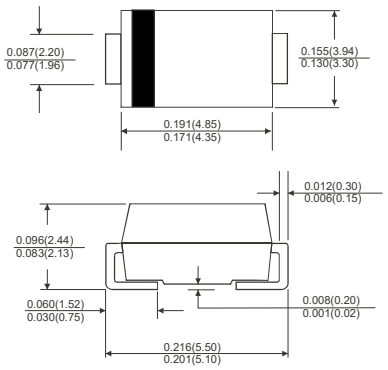

Dimensions in inches and (millimeter)

Features

- Glass Passivated Die Construction
- Low Forward Voltage Drop and Hight Current Capability
- Surge Overload Rating to 50A Peak
- Ideally Suited for Automated Assembly
- Available in Lead Free Version

Circuit diagram



Maximum Ratings and Electrical Characteristics

Parameter		Symbol	S2T-HF	S2W-HF	S2Y-HF	Units
Repetitive peak reverse voltage		V_{RRM}	1300	1600	2000	V
DC blocking voltage		V_R	1300	1600	2000	V
RMS voltage		V_{RMS}	910	1120	1400	V
Peak forwardsurge current: 8.3ms single half sine-wave superimposed on rated load		I_{FSM}	50.0			A
Average forward current		$I_{F(AV)}$	1.5			A
Forward voltage at 1.5A		V_F	1.1			V
DC reverse current	T_J=25°C	I_R	5			μA
DC blocking voltage	T_J=125°C		125			
Typical thermal resistance		$R_{\theta JC}$	20			°C/W
Operating temperature range		T_J	-65 to +150			°C
Storage temperature range		T_{STG}	-65 to +150			°C

Notes: 1. P.C.B mounted with 0.2x0.2" (5.0x5.0mm) copper pad areas.
2. Measured at 1.0 MHz and applied reverse voltage of 4.0 V DC.

Company reserves the right to improve product design , functions and reliability without notice.

Fig.1 - Forward Current Derating Curve

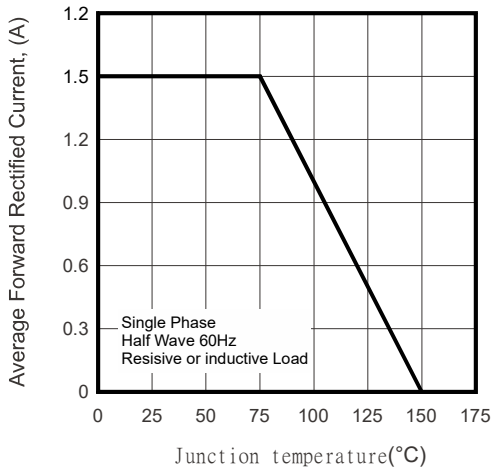

Fig.2 - Typical Instantaneous Forward Characteristics

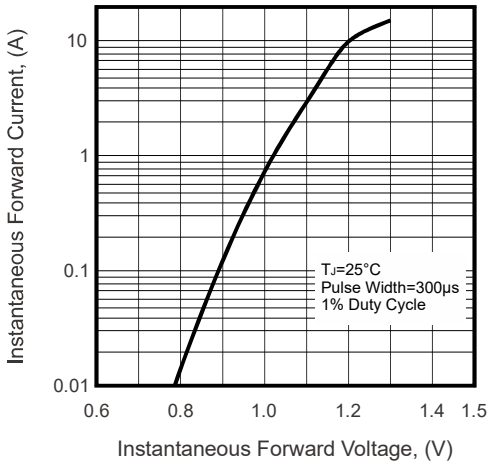

Reel Taping Specification

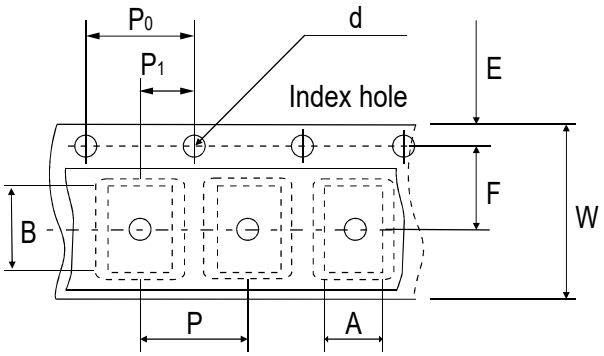

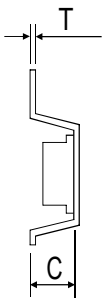

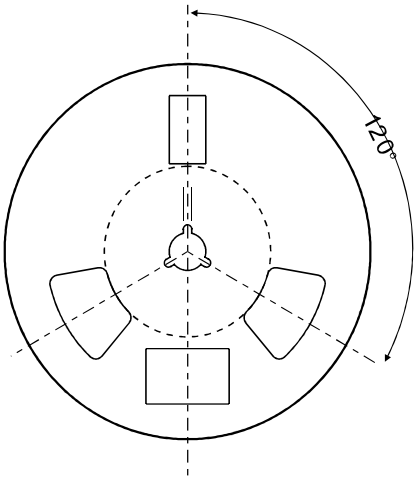

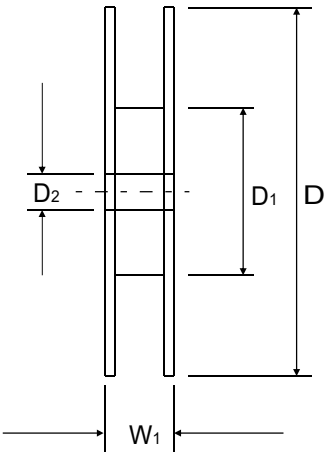

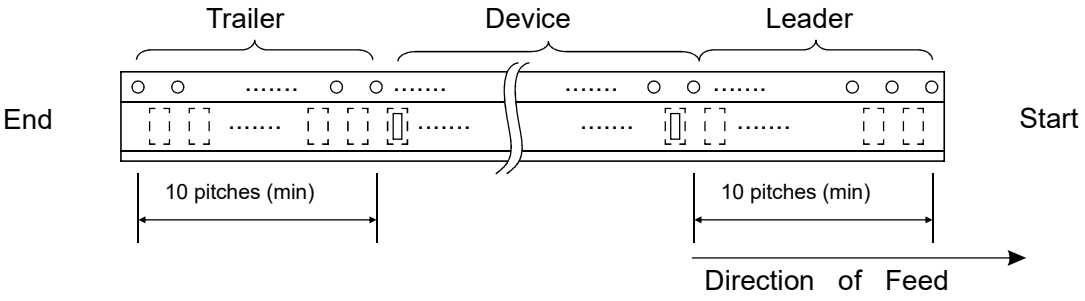

DO-214AA (SMB)	SYMBOL	A	B	C	d	D	D1	D2
	(mm)	3.67 ± 0.10	5.69 ± 0.10	4.50 (max)	1.55 ± 0.10	330.00	50.00 (min)	13.00 ± 0.20
	(inch)	0.144 ± 0.004	0.224 ± 0.004	0.177 (max)	0.061 ± 0.004	13.000	1.969 (min)	0.512 ± 0.008

DO-214AA (SMB)	SYMBOL	E	F	P	P0	P1	W	W1
	(mm)	1.75 ± 0.10	5.50 ± 0.05	8.00 ± 0.10	4.00 ± 0.10	2.00 ± 0.05	12.00 ± 0.30	18.40 (max)
	(inch)	0.069 ± 0.004	0.217 ± 0.002	0.315 ± 0.004	0.157 ± 0.004	0.079 ± 0.002	0.472 ± 0.012	0.724 (max)

Company reserves the right to improve product design , functions and reliability without notice.

Marking Code

Part Number	Marking code
S2T-HF	S2T
S2W-HF	S2W
S2Y-HF	S2Y

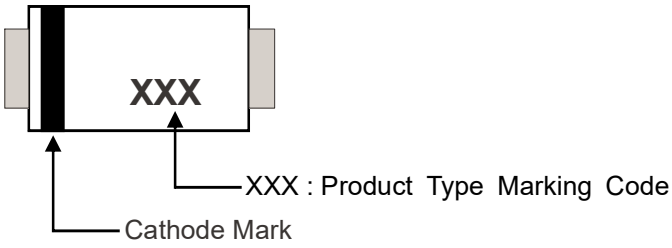

Suggested PAD Layout

SIZE	DO-214AA(SMB)	
	(mm)	(inch)
A	5.60	0.220
B	2.16 MAX	0.085 MAX
C	1.52 MIN	0.060 MIN
D	2.18 MIN	0.086 MIN

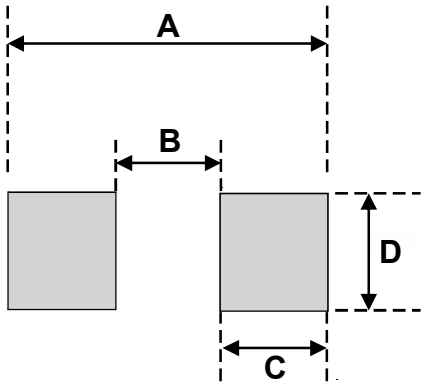

Standard Packaging

Case Type	REEL PACK	
	REEL (pcs)	Reel Size (inch)
DO-214AA (SMB)	3,000	13