SMF4L-HF Series

Working Peak Reverse Voltage: 8.5 to 51 V
Peak Pulse Power: 400 W
RoHS Device
Halogen Free

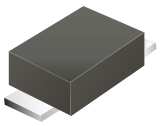

Features

- Glass passivated chip.
- 400W peak pulse power capability with a 10/1000μs waveform, repetition rate (duty cycles): 0.01%.
- Low leakage.
- Excellent clamping capability.
- Very fast response time.
- ESD protection of data lines in accordance with IEC 61000-4-2.
- IEC 61000-4-2 ESD 15kV (air), 8kV (contact).
- High temperature soldering: 260°C/40 seconds at terminals.

SOD-123FL

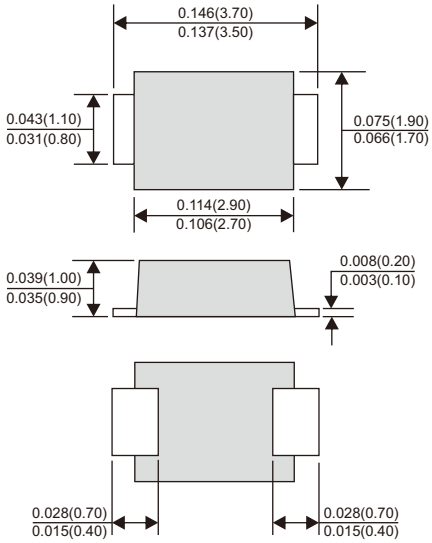

Dimensions in inches and (millimeter)

Mechanical data

- Case: JEDEC SOD-123FL, molded plastic over glass passivated junction.
- Epoxy: UL 94V-0 rate flame retardant.
- Polarity: Color band denotes cathode end except bipolar.
- Terminal: Solderable per MIL-STD-750, method 2026.
- Mounting position: Any.

Circuit Diagram



Bi-directional

Maximum Ratings (TA=25°C unless otherwise noted)

Characteristics	Symbol	Value	Units
Peak power dissipation with a 10/1000μs waveform (Note 1)	P_{PP}	400	W
Peak pulse current with a 10/1000μs waveform (Note 1)	I_{PP}	See next table	A
Power dissipation on infinite heatsink at T_L = 50°C	P_D	1.0	W
Peak forward surge current, 8.3 ms single half sine-wave unidirectional only (Note 2)	I_{FSM}	30	A
Max. instantaneous forward voltage at 25A for unidirectional only	V_F	3.5	V
Operating junction and storage temperature range	T_J, T_{STG}	-55 to +150	°C

Notes: 1. Non-repetitive current pulse, per Fig.5 and derated above Ta=25°C per Fig.1 .

2. Measured on 8.3 ms single half sine-wave or equivalent square wave, duty cycle = 4 pulses per minute maximum.

Electrical Characteristics (TA=25°C unless otherwise noted)

Part No	Breakdown voltage V_{BR} @ I_T			Maximum reverse leakage @V_{RWM} I_R (μA)	Working peak reverse voltage V_{RWM} (V)	Maximum reverse surge current I_{PP} (A)	Maximum clamping voltage @I_{PP} V_C (V)	Marking code
	Min(V)	Max(V)	I_T(mA)					Bi
SMF4L8.5CA-HF	9.44	10.4	1	20	8.5	25.7	14.4	AT
SMF4L9.0CA-HF	10.0	11.1	1	10	9.0	24.1	15.4	AV
SMF4L10CA-HF	11.1	12.3	1	5	10	23.5	17.0	AX
SMF4L11CA-HF	12.2	13.5	1	1	11	22.0	18.2	AZ
SMF4L12CA-HF	13.3	14.7	1	1	12	20.1	19.9	BE
SMF4L13CA-HF	14.4	15.9	1	1	13	18.6	21.5	BG
SMF4L14CA-HF	15.6	17.2	1	1	14	17.2	23.2	BK
SMF4L15CA-HF	16.7	18.5	1	1	15	16.4	24.4	BM
SMF4L16CA-HF	17.8	19.7	1	1	16	15.4	26.0	BP
SMF4L17CA-HF	18.9	20.9	1	1	17	14.5	27.6	BR
SMF4L18CA-HF	20.0	22.1	1	1	18	13.7	29.2	BT
SMF4L20CA-HF	22.2	24.5	1	1	20	12.3	32.4	BV
SMF4L22CA-HF	24.4	26.9	1	1	22	11.3	35.5	BX
SMF4L24CA-HF	26.7	29.5	1	1	24	10.3	38.9	BZ
SMF4L26CA-HF	28.9	31.9	1	1	26	9.5	42.1	CE
SMF4L28CA-HF	31.1	34.4	1	1	28	8.8	45.4	CG
SMF4L30CA-HF	33.3	36.8	1	1	30	8.3	48.4	CK
SMF4L33CA-HF	36.7	40.6	1	1	33	7.5	53.3	CM
SMF4L36CA-HF	40.0	44.2	1	1	36	6.9	58.1	CP
SMF4L40CA-HF	44.4	49.1	1	1	40	6.2	64.5	CR
SMF4L43CA-HF	47.8	52.8	1	1	43	5.8	69.4	CT
SMF4L45CA-HF	50.0	55.3	1	1	45	5.5	72.7	CV
SMF4L48CA-HF	53.3	58.9	1	1	48	5.2	77.4	CX
SMF4L51CA-HF	56.7	62.7	1	1	51	4.9	82.4	CZ

Notes: 1. Suffix A denotes 5% tolerance device.
2. For Bi-directional devices, use suffix CA.

Rating and Characteristic Curves (SMF4L-HF Series)

Fig.1 - Pulse Derating Curve

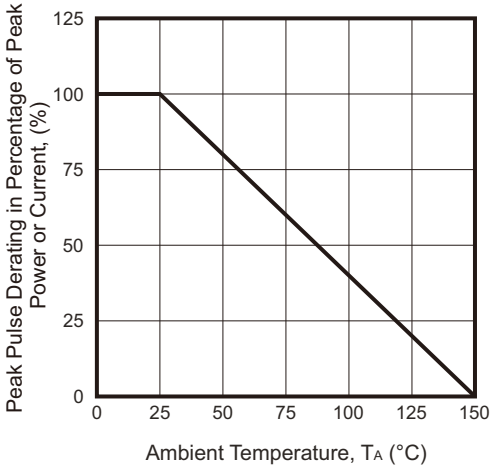

Fig.2 - Max. Non-repetitive Surge Current

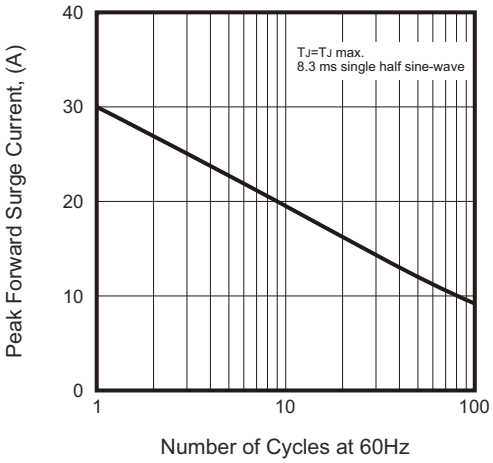

Fig.3 - Typical Junction Capacitance

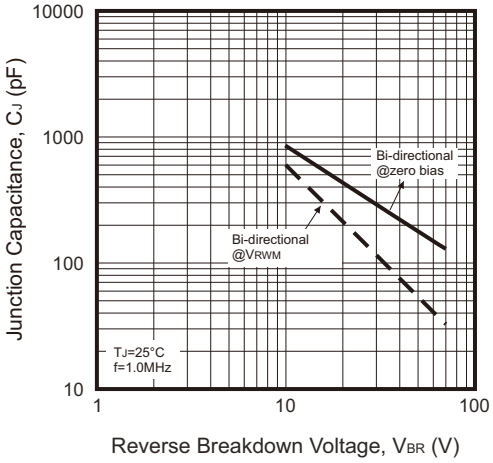

Fig.4 - Peak Pulse Power Rating Curve

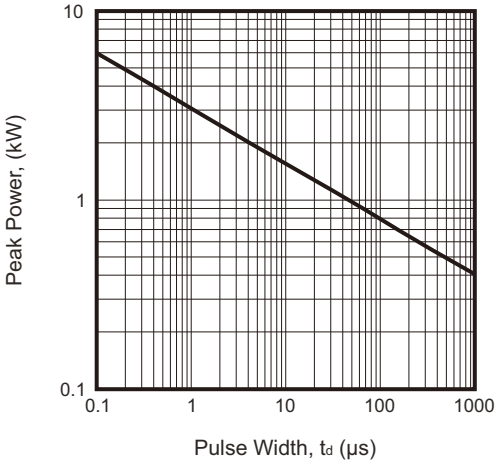

Fig.5 - Pulse Waveform

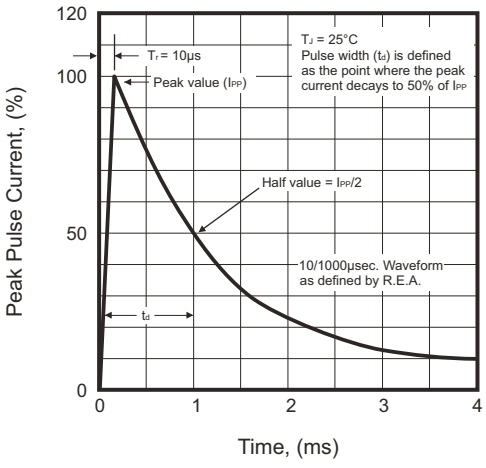

Reel Taping Specification

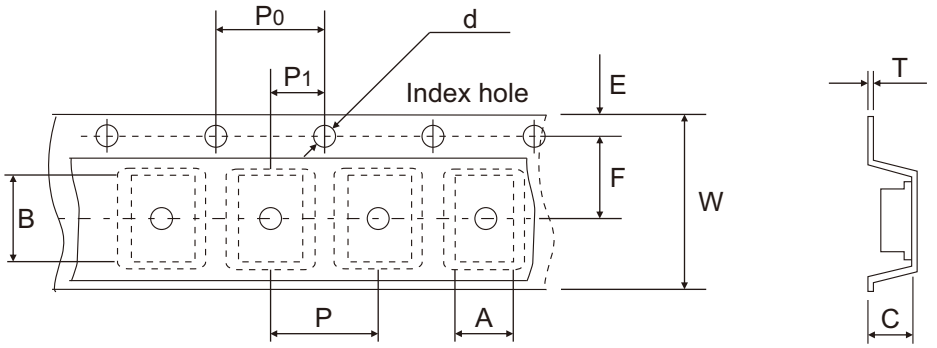

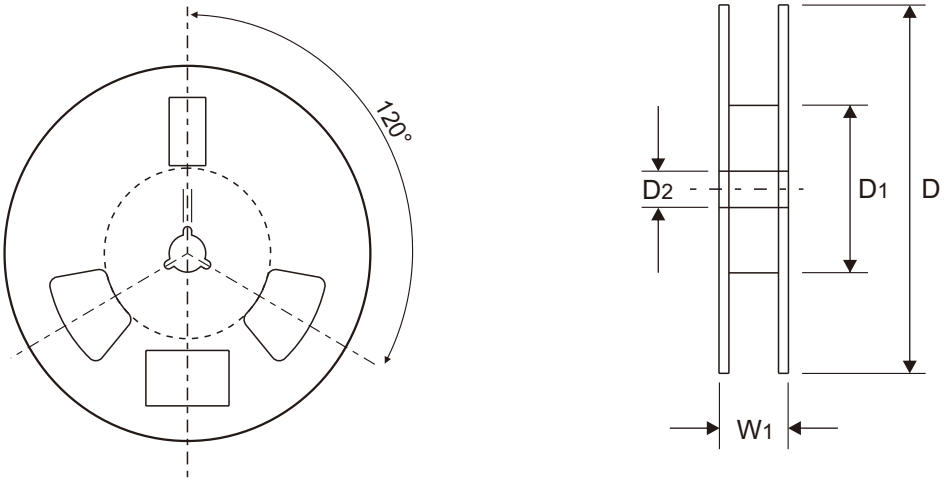

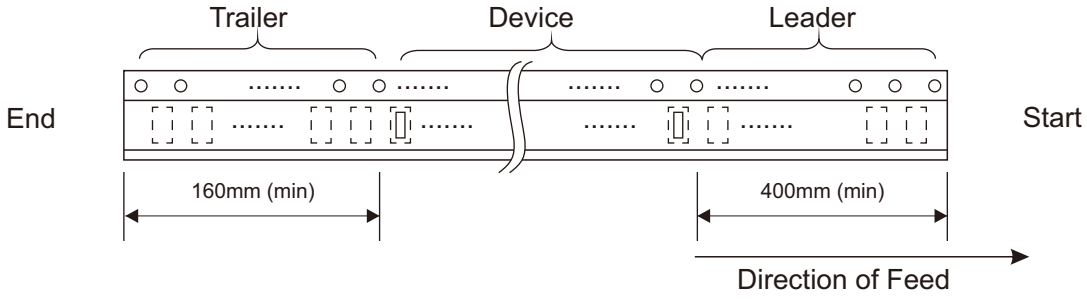

	SYMBOL	A	B	C	d	D	D_1	D_2
SOD-123FL	(mm)	2.05 ± 0.10	3.85 ± 0.10	1.25 ± 0.10	1.55 ± 0.05	178.00 ± 1.00	60.00 ± 0.50	13.50 ± 0.50
	(inch)	0.081 ± 0.004	0.152 ± 0.004	0.049 ± 0.004	0.061 ± 0.002	7.008 ± 0.039	2.362 ± 0.020	0.531 ± 0.020

	SYMBOL	E	F	P	P_0	P_1	T	W	W_1
SOD-123FL	(mm)	1.75 ± 0.10	3.50 ± 0.05	4.00 ± 0.10	4.00 ± 0.10	2.00 ± 0.05	0.20 ± 0.05	8.00 ± 0.30	12.00 ± 0.50
	(inch)	0.069 ± 0.004	0.138 ± 0.002	0.157 ± 0.004	0.157 ± 0.004	0.079 ± 0.002	0.008 ± 0.002	0.315 ± 0.012	0.472 ± 0.020

Marking Code

Part Number	Marking Code
SMF4L-HF Series	See Page 2



xx = Product type marking code (See Page 2)

Suggested P.C.B. PAD Layout

SIZE	SOD-123FL	
	(mm)	(inch)
A	3.10	0.122
B	1.15	0.045
C	1.25	0.048
D	4.25	0.167
E	1.95	0.077

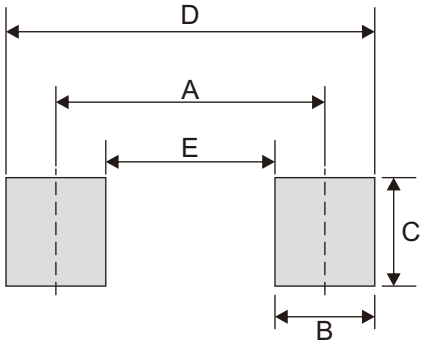

Standard Packaging

Case Type	REEL PACK	
	REEL (pcs)	Reel Size (inch)
SOD-123FL	3,000	7