SMF-HF Series

Working Peak Reverse Voltage: 5.0 to 170 V
Peak Pulse Power: 200 W
RoHS Device
Halogen Free

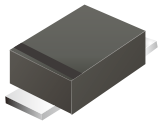

Features

- Glass passivated chip.
- 200W peak pulse power capability with a 10/1000μs waveform, repetition rate (duty cycles): 0.01%.
- Low leakage.
- Uni and Bidirectional unit.
- Excellent clamping capability.
- Very fast response time.
- ESD protection of data lines in accordance with IEC 61000-4-2.
- IEC 61000-4-2 ESD 15kV (air), 8kV (contact).
- High temperature soldering: 260°C/40 seconds at terminals.

SOD-123FL

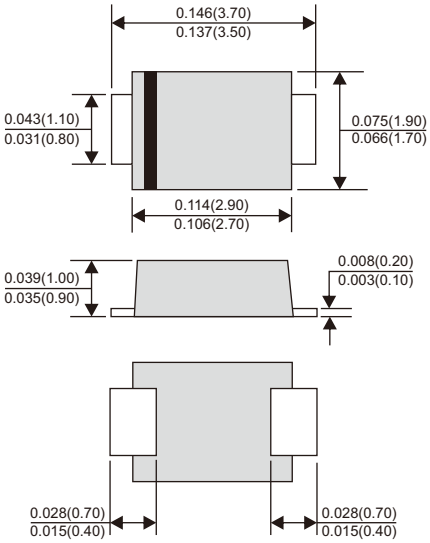

Dimensions in inches and (millimeter)

Mechanical data

- Case: JEDEC SOD-123FL, molded plastic over glass passivated junction.
- Epoxy: UL 94V-0 rate flame retardant.
- Polarity: Color band denotes cathode end except bipolar.
- Terminal: Solderable per MIL-STD-750, method 2026.
- Mounting position: Any.

Circuit Diagram



Uni-directional Bi-directional

Maximum Ratings (TA=25°C unless otherwise noted)

Characteristics	Symbol	Value	Units
Peak power dissipation with a 10/1000μs waveform (Note 1)	P_{PP}	200	W
Peak pulse current with a 10/1000μs waveform (Note 1)	I_{PP}	See next table	A
Power dissipation on infinite heatsink at T_L = 50°C	P_D	1.0	W
Peak forward surge current, 8.3 ms single half sine-wave unidirectional only (Note 2)	I_{FSM}	20	A
Max. instantaneous forward voltage at 25A for unidirectional only	V_F	3.5	V
Operating junction and storage temperature range	T_J, T_{STG}	-55 to +150	°C

Notes: 1. Non-repetitive current pulse, per Fig.5 and derated above Ta=25°C per Fig.1 .
2. Measured on 8.3 ms single half sine-wave or equivalent square wave, duty cycle = 4 pulses per minute maximum.

Electrical Characteristics (TA=25°C unless otherwise noted)

Part No	Breakdown voltage V_{BR} @ I_T			Maximum reverse leakage @V_{RWM} I_R (μA)	Working peak reverse voltage V_{RWM} (V)	Maximum reverse surge current I_{PP} (A)	Maximum clamping voltage @I_{PP} V_C (V)	Marking code	
	Min(V)	Max(V)	I_T(mA)					Uni	Bi
SMF5.0(C)A-HF	6.40	7.00	10	400	5.0	21.74	9.2	FE	KE
SMF6.0(C)A-HF	6.67	7.37	10	400	6.0	19.42	10.3	FG	KG
SMF6.5(C)A-HF	7.22	7.98	10	250	6.5	17.86	11.2	FK	KK
SMF7.0(C)A-HF	7.78	8.60	10	100	7.0	16.67	12.0	FM	KM
SMF7.5(C)A-HF	8.33	9.21	1	50	7.5	15.50	12.9	FP	KP
SMF8.0(C)A-HF	8.89	9.83	1	25	8.0	14.71	13.6	FR	KR
SMF8.5(C)A-HF	9.44	10.4	1	10	8.5	13.89	14.4	FT	KT
SMF9.0(C)A-HF	10.0	11.1	1	5	9.0	12.99	15.4	FV	KV
SMF10(C)A-HF	11.1	12.3	1	2.5	10	11.76	17.0	FX	KX
SMF11(C)A-HF	12.2	13.5	1	2.5	11	10.99	18.2	FZ	KZ
SMF12(C)A-HF	13.3	14.7	1	2.5	12	10.05	19.9	HE	LE
SMF13(C)A-HF	14.4	15.9	1	1	13	9.30	21.5	HG	LG
SMF14(C)A-HF	15.6	17.2	1	1	14	8.62	23.2	HK	LK
SMF15(C)A-HF	16.7	18.5	1	1	15	8.20	24.4	HM	LM
SMF16(C)A-HF	17.8	19.7	1	1	16	7.69	26.0	HP	LP
SMF17(C)A-HF	18.9	20.9	1	1	17	7.25	27.6	HR	LR
SMF18(C)A-HF	20.0	22.1	1	1	18	6.85	29.2	HT	LT
SMF19(C)A-HF	21.1	23.3	1	1	19	6.54	30.6	HB	LB
SMF20(C)A-HF	22.2	24.5	1	1	20	6.17	32.4	HV	LV
SMF22(C)A-HF	24.4	26.9	1	1	22	5.63	35.5	HX	LX
SMF24(C)A-HF	26.7	29.5	1	1	24	5.14	38.9	HZ	LZ
SMF26(C)A-HF	28.9	31.9	1	1	26	4.75	42.1	JE	ME
SMF28(C)A-HF	31.1	34.4	1	1	28	4.41	45.4	JG	MG
SMF30(C)A-HF	33.3	36.8	1	1	30	4.13	48.4	JK	MK
SMF33(C)A-HF	36.7	40.6	1	1	33	3.75	53.3	JM	MM
SMF36(C)A-HF	40.0	44.2	1	1	36	3.44	58.1	JP	MP
SMF40(C)A-HF	44.4	49.1	1	1	40	3.10	64.5	JR	MR
SMF43(C)A-HF	47.8	52.8	1	1	43	2.88	69.4	JT	MT
SMF45(C)A-HF	50.0	55.3	1	1	45	2.75	72.7	JV	MV
SMF48(C)A-HF	53.3	58.9	1	1	48	2.58	77.4	JX	MX
SMF51(C)A-HF	56.7	62.7	1	1	51	2.43	82.4	JZ	MZ
SMF54(C)A-HF	60.0	66.3	1	1	54	2.30	87.1	XE	NE
SMF58(C)A-HF	64.4	71.2	1	1	58	2.14	93.6	XG	NG
SMF60(C)A-HF	66.7	73.7	1	1	60	2.07	96.8	XK	NK
SMF64(C)A-HF	71.1	78.6	1	1	64	1.94	103	XM	NM
SMF70(C)A-HF	77.8	86.0	1	1	70	1.77	113	XP	NP
SMF75(C)A-HF	83.3	92.1	1	1	75	1.65	121	XR	NR
SMF78(C)A-HF	86.7	95.8	1	1	78	1.58	126	XT	NT
SMF85(C)A-HF	94.4	104	1	1	85	1.46	137	XV	NV
SMF90(C)A-HF	100	111	1	1	90	1.37	146	XX	NX
SMF100(C)A-HF	111	123	1	1	100	1.23	162	XZ	NZ
SMF110(C)A-HF	122	135	1	1	110	1.13	177	TE	PE
SMF120(C)A-HF	133	147	1	1	120	1.04	193	TG	PG
SMF130(C)A-HF	144	159	1	1	130	0.96	209	TK	PK
SMF140(C)A-HF	155	171	1	1	140	0.89	224	TB	PB
SMF150(C)A-HF	167	185	1	1	150	0.82	243	TM	PM
SMF160(C)A-HF	178	197	1	1	160	0.77	259	TP	PP
SMF170(C)A-HF	189	209	1	1	170	0.73	275	TR	PR

Notes: 1. Suffix A or CA denotes 5% tolerance device.
2. For Bi-directional devices having V_R of 10 volts and under, the I_R limit is double.
3. For Bi-directional devices, use suffix CA.

Rating and Characteristic Curves (SMF5.0(C)A-HF Thru. SMF170(C)A-HF)

Fig.1 - Pulse Derating Curve

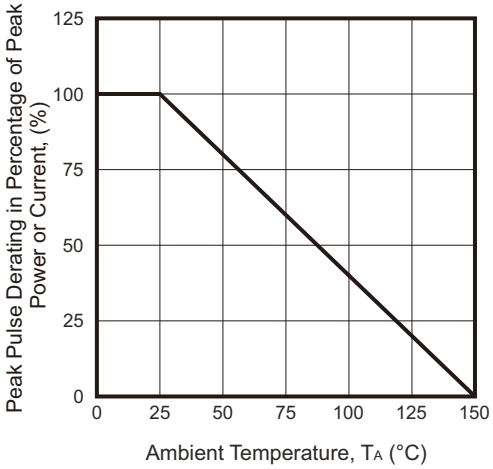

Fig.2 - Max. Non-repetitive Surge Current

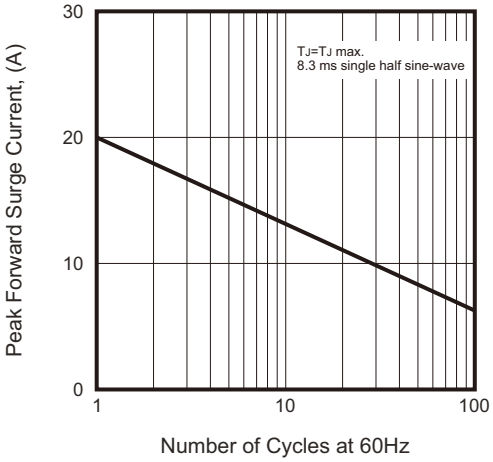

Fig.3 - Typical Junction Capacitance

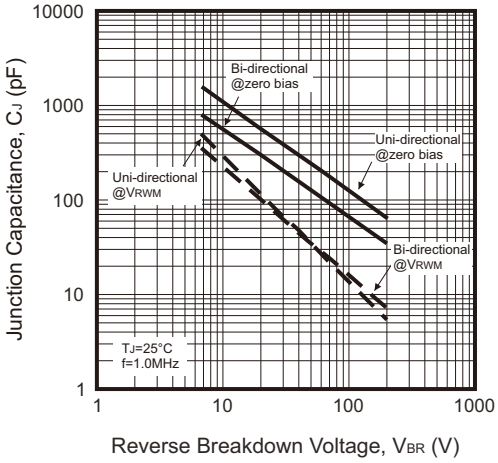

Fig.4 - Peak Pulse Power Rating Curve

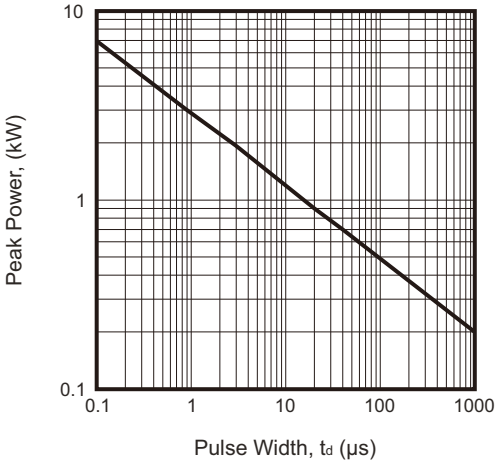

Fig.5 - Pulse Waveform

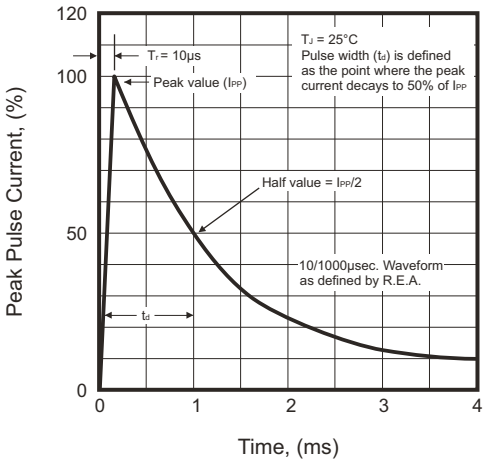

Reel Taping Specification

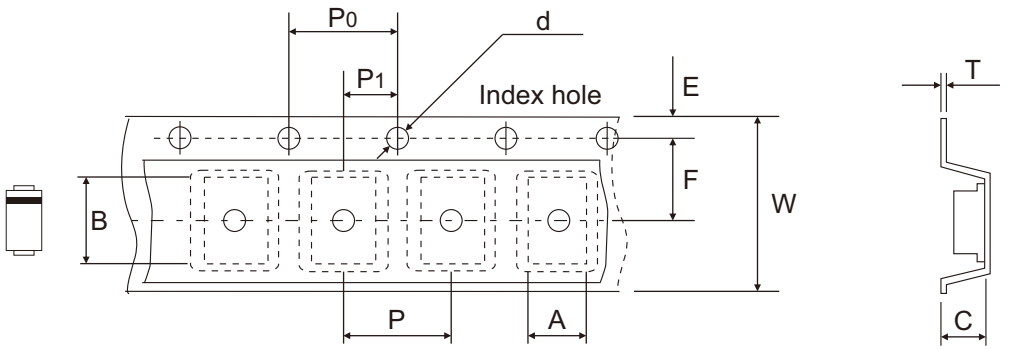

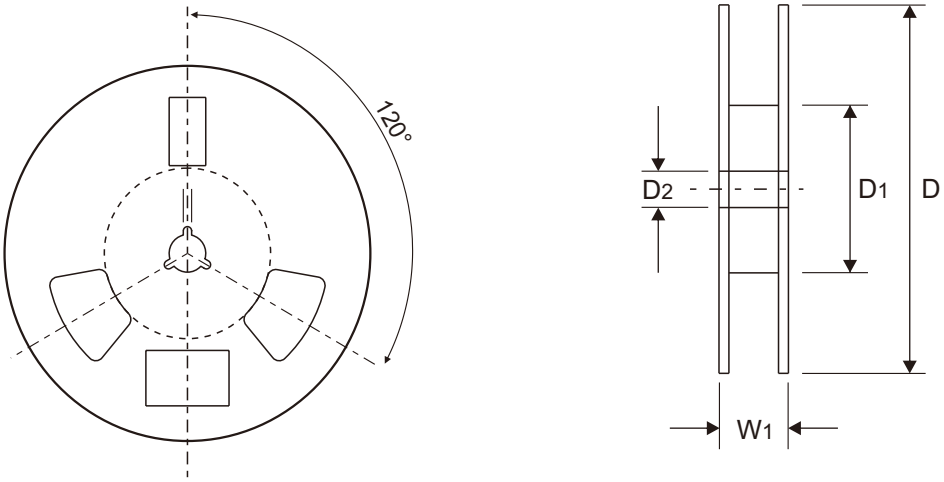

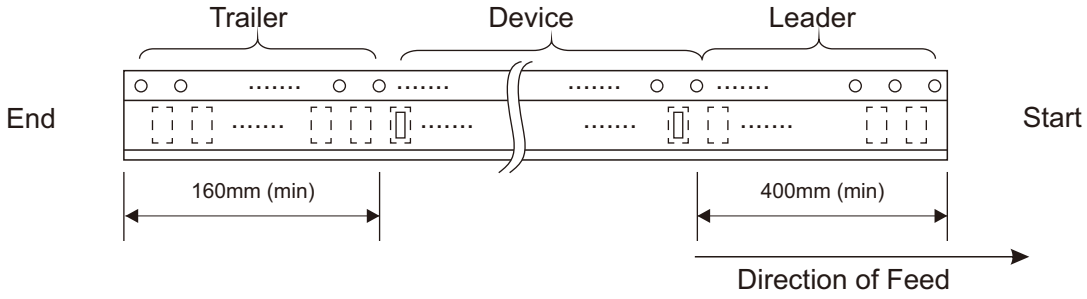

	SYMBOL	A	B	C	d	D	D_1	D_2
SOD-123FL	(mm)	2.05 ± 0.10	3.85 ± 0.10	1.25 ± 0.10	1.55 ± 0.05	178.00 ± 1.00	60.00 ± 0.50	13.50 ± 0.50
	(inch)	0.081 ± 0.004	0.152 ± 0.004	0.049 ± 0.004	0.061 ± 0.002	7.008 ± 0.039	2.362 ± 0.020	0.531 ± 0.020

	SYMBOL	E	F	P	P_0	P_1	T	W	W_1
SOD-123FL	(mm)	1.75 ± 0.10	3.50 ± 0.05	4.00 ± 0.10	4.00 ± 0.10	2.00 ± 0.05	0.20 ± 0.05	8.00 ± 0.30	12.00 ± 0.50
	(inch)	0.069 ± 0.004	0.138 ± 0.002	0.157 ± 0.004	0.157 ± 0.004	0.079 ± 0.002	0.008 ± 0.002	0.315 ± 0.012	0.472 ± 0.020

Marking Code

Part Number	Marking Code
SMF-HF Series	See Page 2



xx = Product type marking code (See Page 2)

▌= Cathode band

Suggested P.C.B. PAD Layout

SIZE	SOD-123FL	
	(mm)	(inch)
A	3.10	0.122
B	1.15	0.045
C	1.25	0.048
D	4.25	0.167
E	1.95	0.077

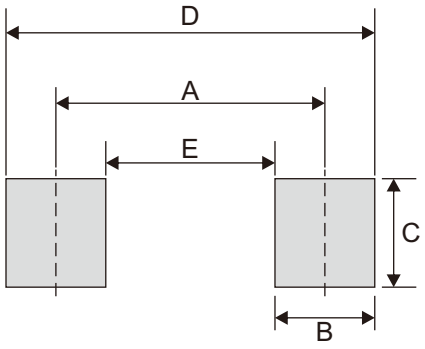

Standard Packaging

Case Type	REEL PACK	
	REEL (pcs)	Reel Size (inch)
SOD-123FL	3,000	7