Low Profile | Isolated | Safety Approvals | OCP | OVP | Remote ON/OFF

CHS-series

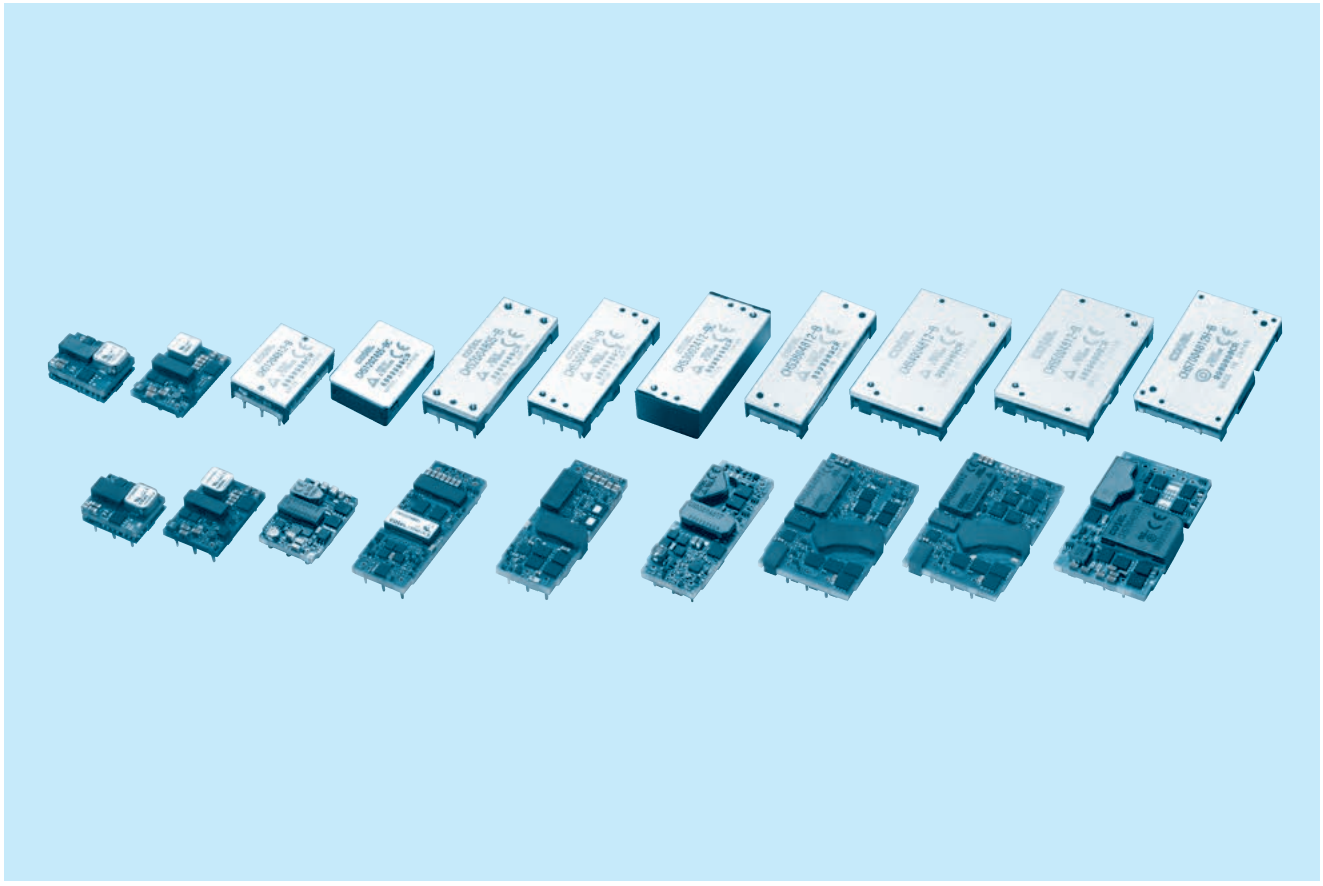

Feature

High efficiency 96% (CHS7004812H)
Compact DC-DC Converter, "BRICK SIZE" which has been standard size for Telecommunication Market
High density
High reliability : not built-in aluminum and tantalum electrolytic capacitor
Built-in overcurrent, overvoltage and thermal protection circuits
Built-in remote ON/OFF

CE marking

Low Voltage Directive
RoHS Directive

UKCA marking

Electrical Equipment Safety Regulations
RoHS Regulations

Safety agency approvals

UL60950-1, C-UL, EN62368-1 (CHS60, CHS80, CHS120, CHS200, CHS300, CHS380, CHS400, CHS500)
UL62368-1, C-UL, EN62368-1 (CHS700)

5-year warranty

COSEL DC-DC Converters Bus Converter·Power Module Type

CHS60

Ordering information

CH	S	60	48	3R3	-□
①	②	③	④	⑤	⑧

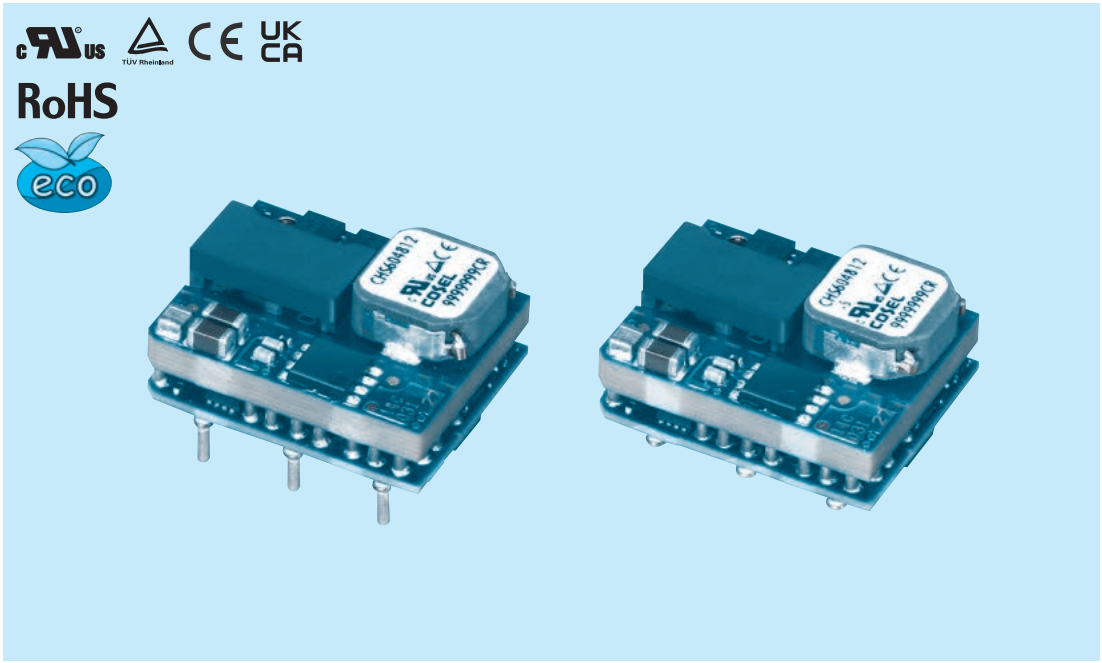

①Series name
②Single output
③Output power
④Input voltage
48:DC36 - 76V
⑤Output voltage
3R3:3.3V
05:5.0V
12:12V
⑧Optional
R :with Remote ON/OFF Positive logic control
U :Shut down in protection circuit working
S :SMD

MODEL	CHS60483R3	CHS604805	CHS604812
MAX OUTPUT WATTAGE[W]	59.4	60.0	72.0
DC OUTPUT	3.3V 18A	5V 12A	12V 6A

SPECIFICATIONS

	MODEL		CHS60483R3	CHS604805	CHS604812
INPUT	VOLTAGE[V]		DC36 - 76		
	CURRENT[A]	*1	1.36typ	1.34typ	1.63typ
	EFFICIENCY[%]	*1	91.5typ	93.0typ	92.5typ
OUTPUT	VOLTAGE[V]		3.3	5	12
	CURRENT[A]		18	12	6
	LINE REGULATION[mV]		10max		
	LOAD REGULATION[mV]		10max		
	RIPPLE	[mVrms] *2	30max	30max	50max
		[mVp-p] *2	80max	100max	150max
	RIPPLE NOISE[mVp-p]	*2	120max	150max	180max
	TEMPERATURE REGULATION[mV]		66max	100max	240max
	DRIFT[mV]	*3	16max	20max	40max
	START-UP TIME[ms]		50max (DCIN 48V, Io=100%)		
	OUTPUT VOLTAGE ADJUSTMENT RANGE	*4	Fixed (TRM pin open), adjustable by external resistor		
			-10% / +15%	-10% / +20%	-20% / +10%
	OUTPUT VOLTAGE SETTING		±1.6%		
PROTECTION CIRCUIT AND OTHERS	OVERCURRENT PROTECTION		Works over 105% of rating (Auto restart)		
	OVERVOLTAGE PROTECTION		120% - 140% (Auto restart)	125% - 145% (Auto restart)	115% - 135% (Auto restart)
	REMOTE SENSING		Provided		
	REMOTE ON/OFF		Provided (Negative Logic L : ON, H :OFF)		
ISOLATION	INPUT-OUTPUT		DC2,250V or AC1,000V 1minute, Cutoff current = 10mA, DC500V 50MΩ min (20±15℃)		
ENVIRONMENT	OPERATING TEMP.,HUMID.AND ALTITUDE		-40 to +85℃, 20 - 95%RH (Non condensing) (Refer to "Derating"), 5,000m (16,000 feet) max		
	STORAGE TEMP.,HUMID.AND ALTITUDE		-40 to +100℃, 20 - 95%RH (Non condensing), 9,000m (30,000 feet) max		
	VIBRATION		10 - 55Hz, 49.0m/s² (5G), 3minutes period, 60minutes each along X, Y and Z axis		
	IMPACT		196.1m/s² (20G), 11ms, once each along X, Y and Z axis		
SAFETY	AGENCY APPROVALS		UL60950-1, C-UL (CSA60950-1), EN62368-1		
OTHERS	CASE SIZE/WEIGHT		19.05×12.7×23.36mm [0.75×0.5×0.92 inches] (W×H×D) / 15g max		
	COOLING METHOD		Convection / Forced air		

*1 At rated input (DC48V) and rated load. Ta=25℃, 2m/s.
*2 Ripple and ripple noise is measured by using measuring board with ceramic capacitor 22μF.
*3 Drift is the change in DC output for an eight hour period after a half-hour warm-up at 25℃, with the input voltage held constant at the rated input/output.
*4 Refer to the instruction manual for input voltage derating.

External view

1. DIP

※ Tolerance:±0.5 [±0.02]
※ Dimensions in mm, [ ]=inches

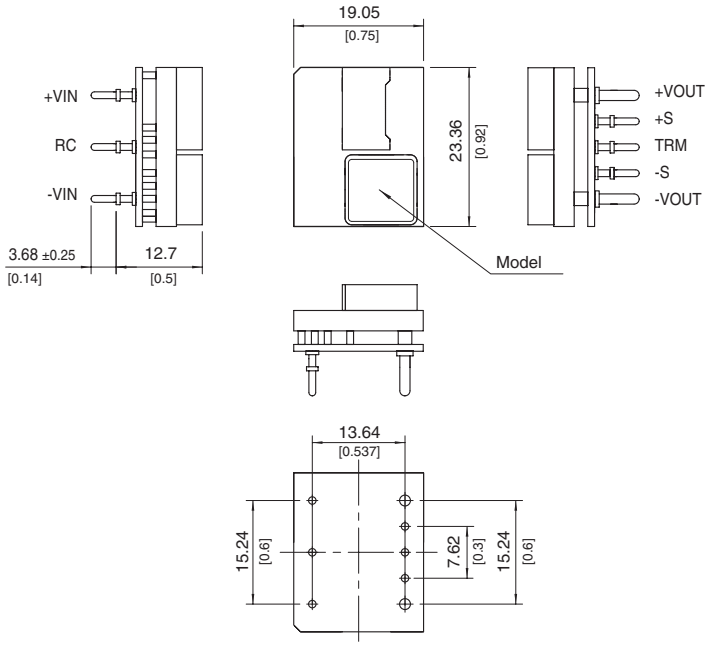

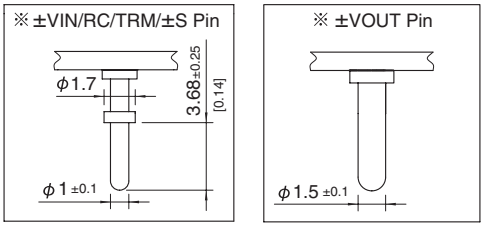

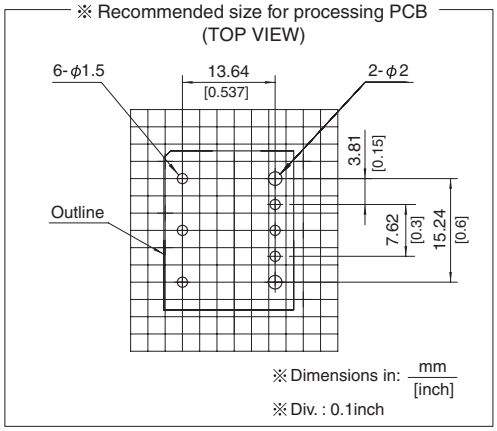

2. SMD (option S)

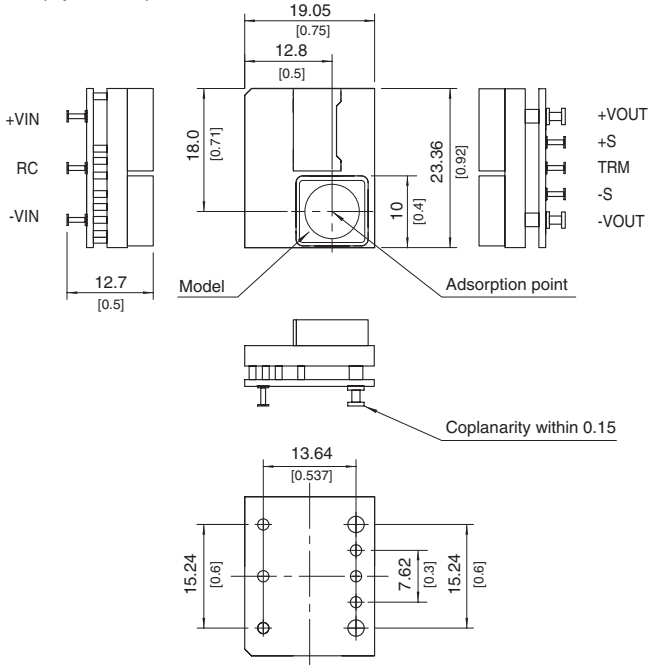

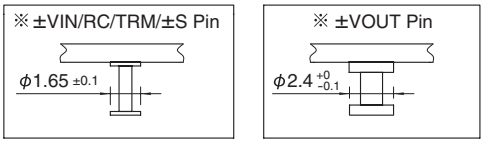

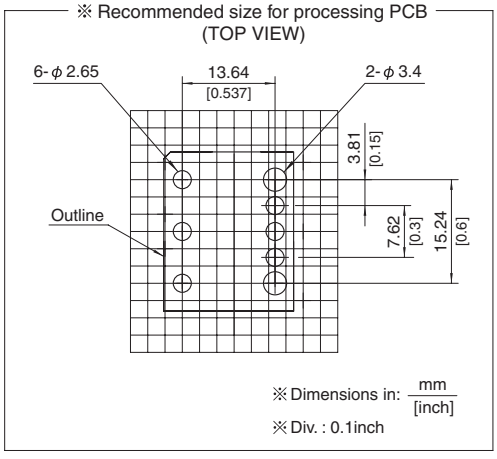

COSEL DC-DC Converters Bus Converter·Power Module Type

CHS80

Ordering information

CH	S	80	48	05	-□
①	②	③	④	⑤	⑧

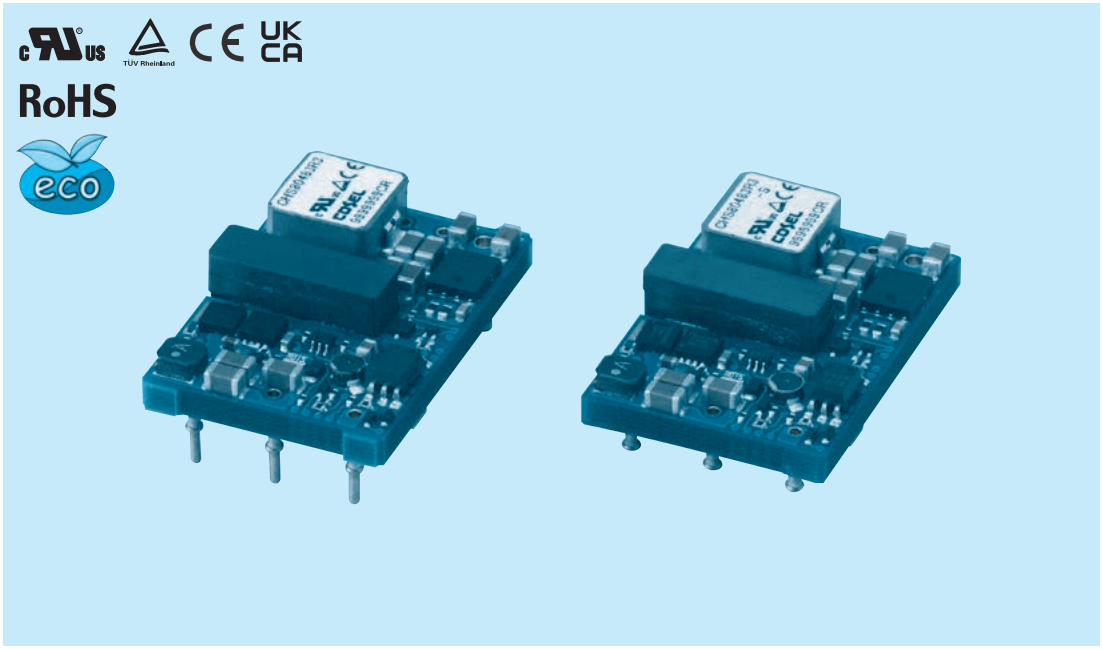

①Series name
②Single output
③Output power
④Input voltage
48:DC36-76V
⑤Output voltage
3R3:3.3V
05:5.0V
12:12V
⑧Optional
R :with Remote ON/OFF Positive logic control
U :Shut down in protection circuit working
S :SMD

MODEL	CHS80483R3	CHS804805	CHS804812
MAX OUTPUT WATTAGE[W]	82.5	80.0	90.0
DC OUTPUT	3.3V 25A	5.0V 16A	12V 7.5A

SPECIFICATIONS

	MODEL		CHS80483R3	CHS804805	CHS804812
INPUT	VOLTAGE[V]		DC36 - 76		
	CURRENT[A]	*1	1.86typ	1.81typ	2.03typ
	EFFICIENCY[%]	*1	92typ	92typ	92typ
OUTPUT	VOLTAGE[V]		3.3	5	12
	CURRENT[A]		25	16	7.5
	LINE REGULATION[mV]		10max		
	LOAD REGULATION[mV]		10max		
	RIPPLE	[mVrms] *2	30max	30max	50max
		[mVp-p] *2	80max	100max	150max
	RIPPLE NOISE[mVp-p]	*2	120max	150max	180max
	TEMPERATURE REGULATION[mV]		66max	100max	240max
	DRIFT[mV]	*3	16max	20max	40max
	START-UP TIME[ms]		200max (DCIN 48V, Io=100%)		
	OUTPUT VOLTAGE ADJUSTMENT RANGE	*4	Fixed (TRM pin open), adjustable by external resistor		
			-10% / +15%	-10% / +20%	-10% / +10%
	OUTPUT VOLTAGE SETTING		±1.6%		
PROTECTION CIRCUIT AND OTHERS	OVERCURRENT PROTECTION		Works over 105% of rating (Auto restart)		
	OVERVOLTAGE PROTECTION		120% - 140% (Auto restart)	125% - 145% (Auto restart)	115% - 135% (Auto restart)
	REMOTE SENSING		Provided		
	REMOTE ON/OFF		Provided (Negative logic L:ON, H:OFF)		
ISOLATION	INPUT-OUTPUT		DC2,250V or AC1,000V 1minute, Cutoff current = 10mA, DC500V 50MΩ min (20±15℃)		
ENVIRONMENT	OPERATING TEMP.,HUMID.AND ALTITUDE		-40 to +85℃, 20 - 95%RH (Non condensing) (Refer to "Derating"), 3,000m (10,000feet) max		
	STORAGE TEMP.,HUMID.AND ALTITUDE		-40 to +100℃, 20 - 95%RH (Non condensing), 9,000m (30,000feet) max		
	VIBRATION		10 - 55Hz, 49.0m/s² (5G), 3minutes period, 60minutes each along X, Y and Z axis		
	IMPACT		196.1m/s² (20G), 11ms, once each along X, Y and Z axis		
SAFETY	AGENCY APPROVALS		UL60950-1, C-UL (CSA60950-1), EN62368-1		
OTHERS	CASE SIZE/WEIGHT		33.0×10.5×22.76mm [1.3×0.41×0.9 inches] (W×H×D) / 21g max		
	COOLING METHOD		Convection / Forced air		

*1 At rated input(DC48V) and rated load. Ta=25℃, 2m/s.
*2 Ripple and ripple noise is measured by using measuring board with ceramic capacitor 22μF.
*3 Drift is the change in DC output for an eight hour period after a half-hour warm-up at 25℃, with the input voltage held constant at the rated input/output.
*4 Refer to the instruction manual for input voltage derating.

External view

1. DIP

※ Tolerance : ±0.5 [±0.02]
※ Dimensions in mm, [ ]=inches

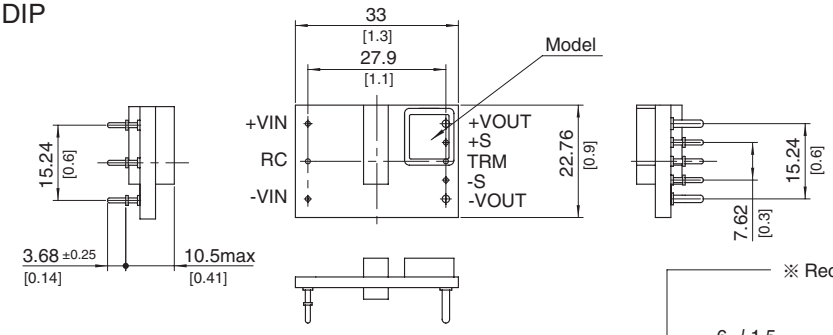

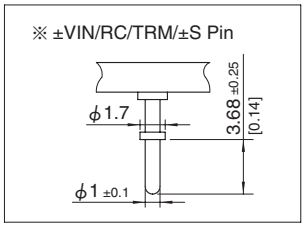

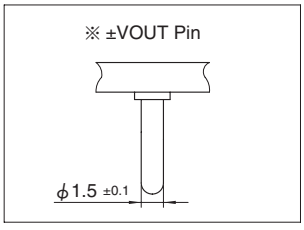

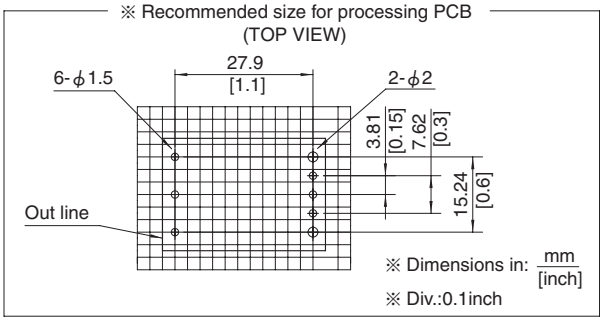

2. SMD (optionS)

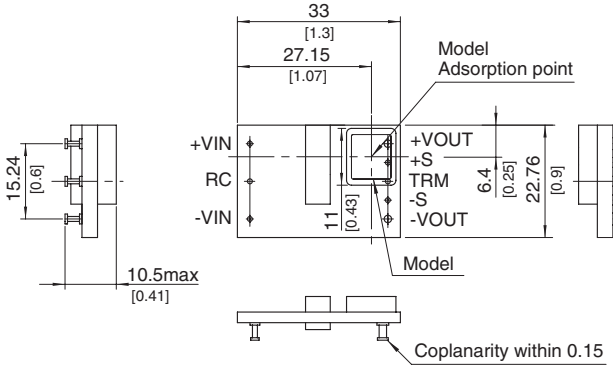

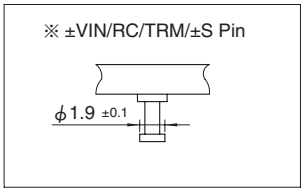

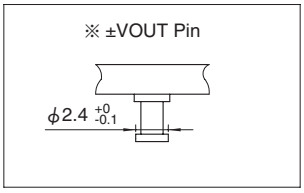

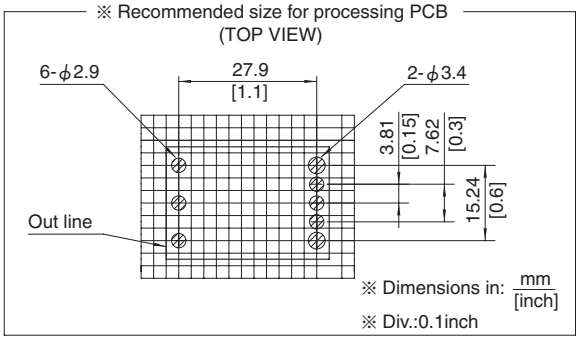

COSEL DC-DC Converters Bus Converter·Power Module Type

CHS120

Ordering information

CH	S	120	48	05	-□
①	②	③	④	⑤	⑧

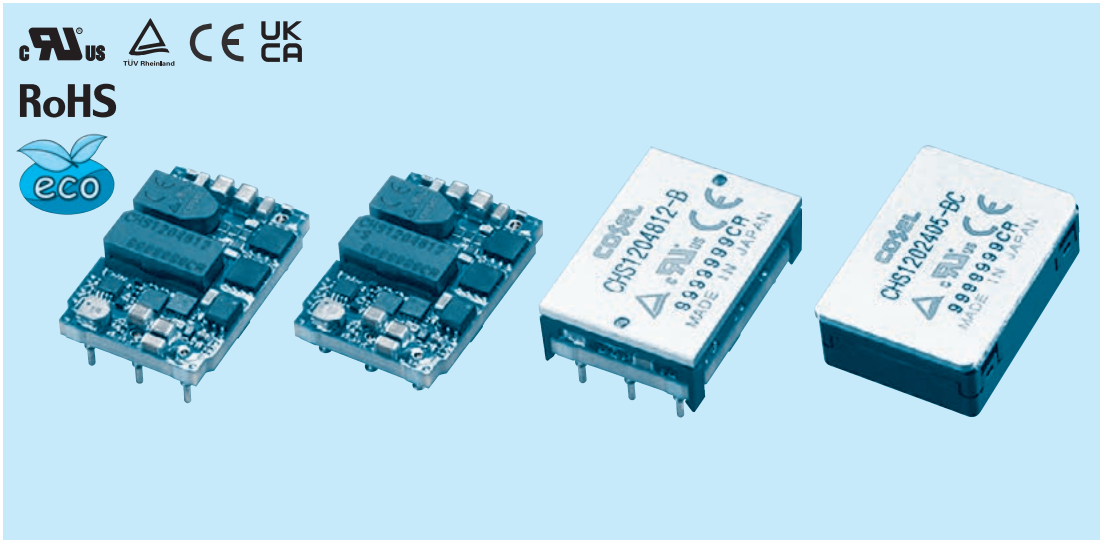

①Series name
②Single output
③Output power
④Input voltage
24:DC18 - 36V
48:DC36 - 76V
⑤Output voltage
3R3:3.3V
05:5.0V
12:12V
15:15V
24:24V
⑧Optional
R :with Remote ON/OFF Positive logic control
U :Shut down in protection circuit working
S :SMD
B :BasePlate option
BC:Baseplate and case option (only CHS12024)
L2:Pin length 5.3mm
L5:5pins option (+S,-S,TRM less)

MODEL	CHS1202405	CHS1202412	CHS1202415	CHS1202424
MAX OUTPUT WATTAGE[W]	120.0	120.0	120.0	100.8
DC OUTPUT	5V 24A	12V 10A	15V 8A	24V 4.2A

SPECIFICATIONS

	MODEL		CHS1202405	CHS1202412	CHS1202415	CHS1202424
INPUT	VOLTAGE[V]		DC18 - 36			
	CURRENT[A]	*1	5.41typ	5.47typ	5.50typ	4.65typ
	EFFICIENCY[%]	*1	92.5typ	91.5typ	91typ	90.5typ
OUTPUT	VOLTAGE[V]		5	12	15	24
	CURRENT[A]		24	10	8	4.2
	LINE REGULATION[mV]		10max	24max	30max	48max
	LOAD REGULATION[mV]		10max	24max	30max	48max
	RIPPLE	[mVrms] *2	40max	50max	60max	83max
		[mVp-p] *2	120max	150max	180max	250max
	RIPPLE NOISE[mVp-p]	*2	150max	180max	210max	280max
	TEMPERATURE REGULATION[mV]		100max	240max	300max	480max
	DRIFT[mV]	*3	20max	40max	50max	80max
	START-UP TIME[ms]		50max (DCIN 24V, Io=100%)			
	OUTPUT VOLTAGE ADJUSTMENT RANGE	*4	Fixed (TRM pin open), adjustable by external resistor			
			-10% / +20%	-10% / +10%	-10% / +5%	-10% / +10%
	OUTPUT VOLTAGE SETTING		±1.6%			
PROTECTION CIRCUIT AND OTHERS	OVERCURRENT PROTECTION		Works over 105% of rating (Auto restart)			
	OVERVOLTAGE PROTECTION		125% - 150% (Auto restart)	115% - 135% (Auto restart)	110% - 130% (Auto restart)	115% - 135% (Auto restart)
	REMOTE SENSING		Provided			
	REMOTE ON/OFF		Provided (Negative logic L:ON, H:OFF)			

MODEL	CHS120483R3	CHS1204805	CHS1204812	CHS1204815	CHS1204824
MAX OUTPUT WATTAGE[W]	99.0	120.0	120.0	120.0	100.8
DC OUTPUT	3.3V 30A	5V 24A	12V 10A	15V 8A	24V 4.2A

SPECIFICATIONS

	MODEL		CHS120483R3	CHS1204805	CHS1204812	CHS1204815	CHS1204824
INPUT	VOLTAGE[V]		DC36 - 76				
	CURRENT[A]	*1	2.23typ	2.69typ	2.69typ	2.72typ	2.31typ
	EFFICIENCY[%]	*1	92.5typ	93typ	93typ	92typ	91typ
OUTPUT	VOLTAGE[V]		3.3	5	12	15	24
	CURRENT[A]		30	24	10	8	4.2
	LINE REGULATION[mV]		10max			30max	48max
	LOAD REGULATION[mV]		10max			30max	48max
	RIPPLE	[mVrms] *2	30max	30max	50max	60max	83max
		[mVp-p] *2	80max	100max	150max	180max	250max
	RIPPLE NOISE[mVp-p]	*2	120max	150max	180max	210max	280max
	TEMPERATURE REGULATION[mV]		66max	100max	240max	300max	480max
	DRIFT[mV]	*3	16max	20max	40max	50max	80max
	START-UP TIME[ms]		50max (DCIN 48V, Io=100%)				
	OUTPUT VOLTAGE ADJUSTMENT RANGE	*4	Fixed (TRM pin open), adjustable by external resistor				
			-10% / +15%	-10% / +20%	-10% / +10%	-10% / +5%	-10% / +10%
	OUTPUT VOLTAGE SETTING		±1.6%				
PROTECTION CIRCUIT AND OTHERS	OVERCURRENT PROTECTION		Works over 105% of rating (Auto restart)				
	OVERVOLTAGE PROTECTION		120% - 140% (Auto restart)	125% - 145% (Auto restart)	115% - 135% (Auto restart)	110% - 130% (Auto restart)	115% - 135% (Auto restart)
	REMOTE SENSING		Provided				
	REMOTE ON/OFF		Provided (Negative logic L:ON, H:OFF)				

GENERAL SPECIFICATIONS

ISOLATION	INPUT-OUTPUT		DC2,250V or AC1,000V 1minute, Cutoff current = 10mA, DC500V 50MΩ min (20±15℃)
	INPUT-BASEPLATE	*5 *6	DC2,250V or AC1,000V 1minute, Cutoff current = 10mA, DC500V 50MΩ min (20±15℃)
	OUTPUT-BASEPLATE	*5 *6	AC500V 1minute, Cutoff current = 100mA, DC500V 50MΩ min (20±15℃)
ENVIRONMENT	OPERATING TEMP.,HUMID.AND ALTITUDE		-40 to +85℃, 20 - 95%RH (Non condensing) (Refer to "Derating"), 5,000m (16,000feet) max
	STORAGE TEMP.,HUMID.AND ALTITUDE		-40 to +100℃, 20 - 95%RH (Non condensing), 9,000m (30,000feet) max
	VIBRATION		10 - 55Hz, 49.0m/s² (5G), 3minutes period, 60minutes each along X, Y and Z axis
	IMPACT		196.1m/s² (20G), 11ms, once each along X, Y and Z axis
SAFETY	AGENCY APPROVALS		UL60950-1, C-UL (CSA60950-1), EN62368-1
OTHERS	CASE SIZE/WEIGHT		33.0×10.5×22.86mm [1.3×0.41×0.9 inches] (W×H×D) / 19g max
			33.5×12.7×23.36mm [1.32×0.5×0.92 inches] (W×H×D) / 28g max *5
			36.5×12.7×26.5mm [1.44×0.5×1.04 inches] (W×H×D) / 32g max *6
	COOLING METHOD		Convection/Forced air/Conduction

*1 At rated input (DC24V, DC48V) and rated load. Ta=25℃, 2m/s.
*2 Ripple and ripple noise is measured by using measuring board with ceramic capacitor 22μF.
*3 Drift is the change in DC output for an eight hour period after a half-hour warm-up at 25℃.
*4 Refer to the instruction manual for input voltage derating.
*5 BasePlate Option.
*6 Baseplate and case option.

External view

※ Tolerance : ±0.5
※ Dimensions in mm, [ ]=inches

1. DIP

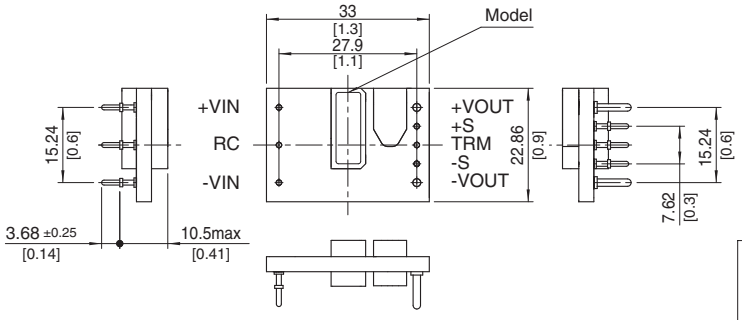

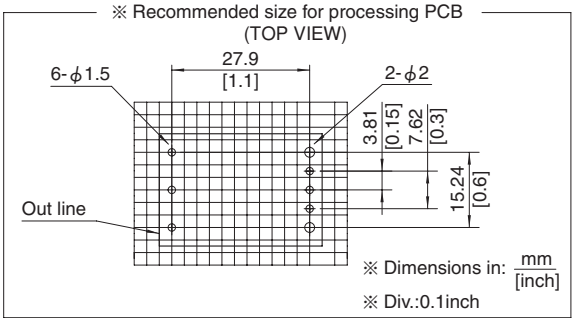

2. SMD (option S)

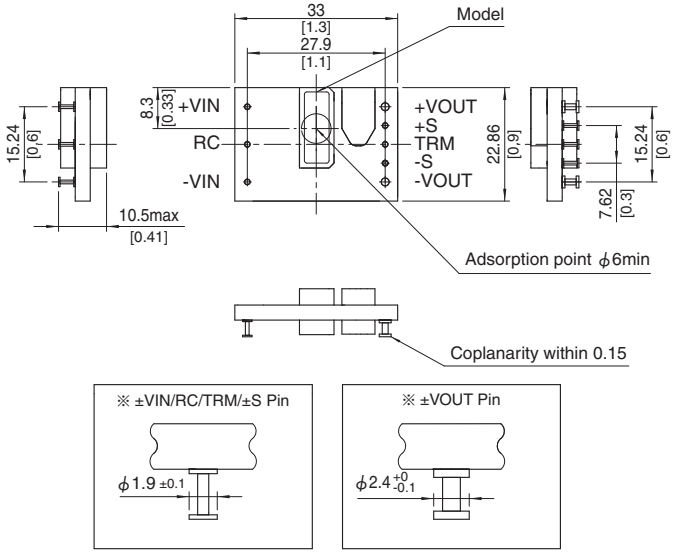

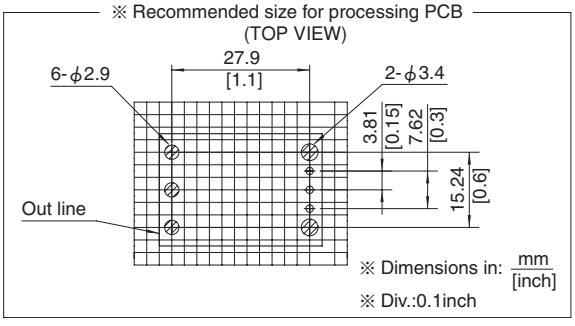

3. BasePlate (option B)

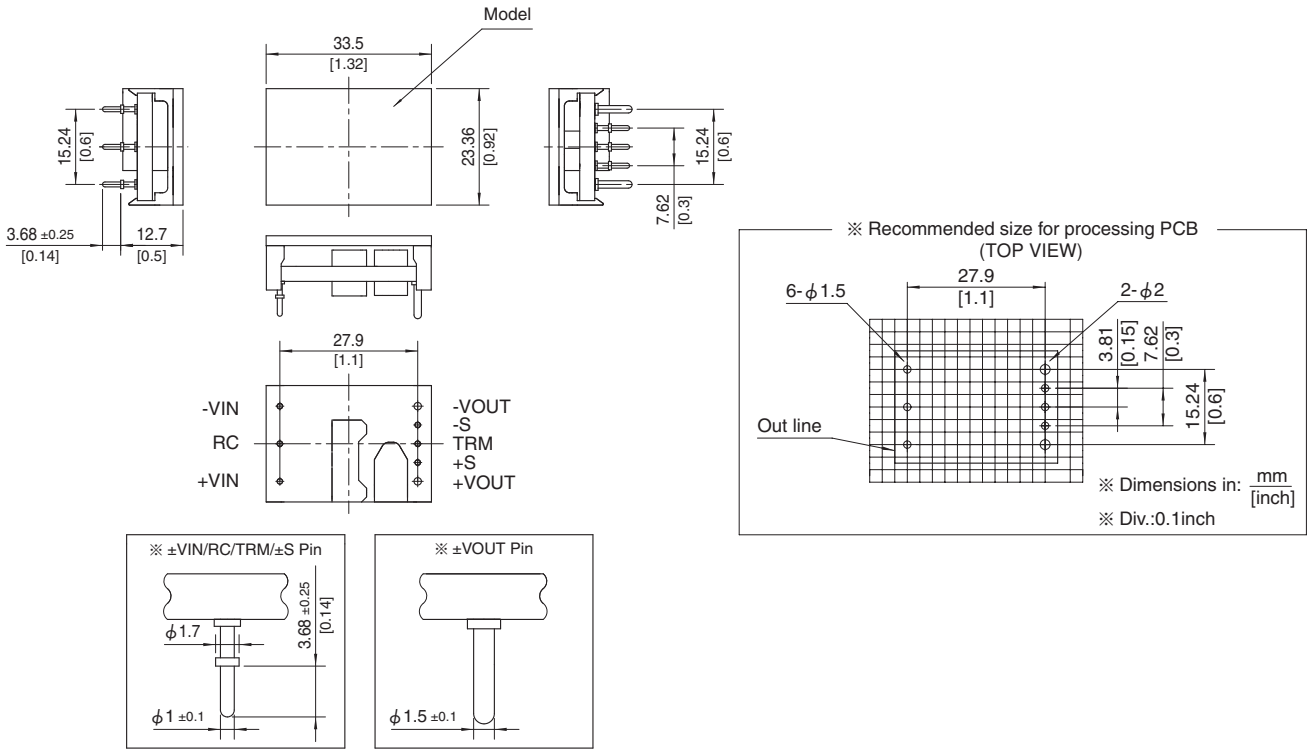

4. Baseplate and case (option BC)

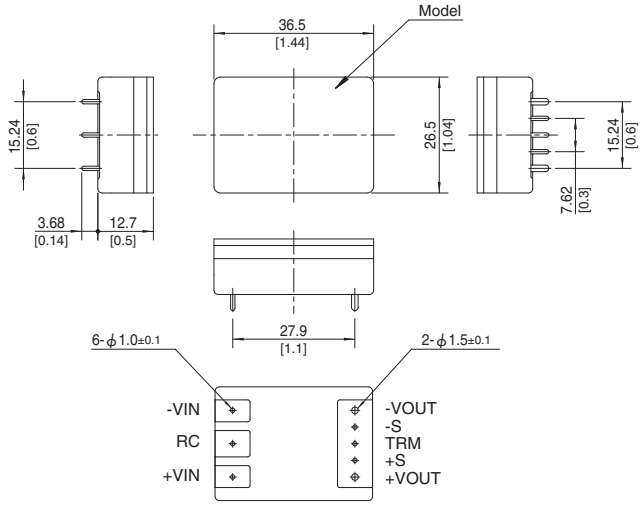

5. 5pins type (option L5)

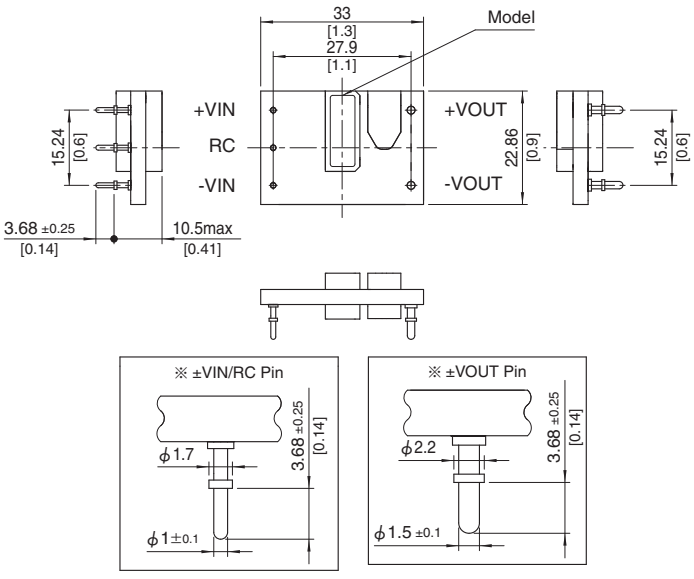

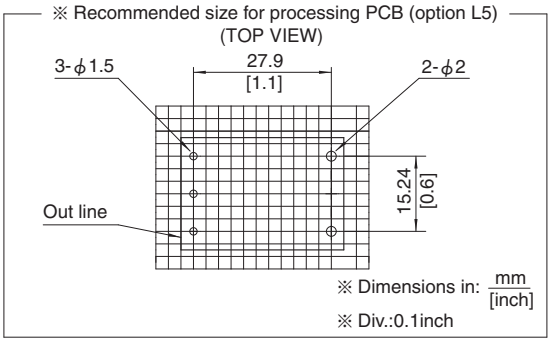

COSEL DC-DC Converters Bus Converter·Power Module Type

CHS200

Ordering information

CH	S	200	48	05	-□
①	②	③	④	⑤	⑧

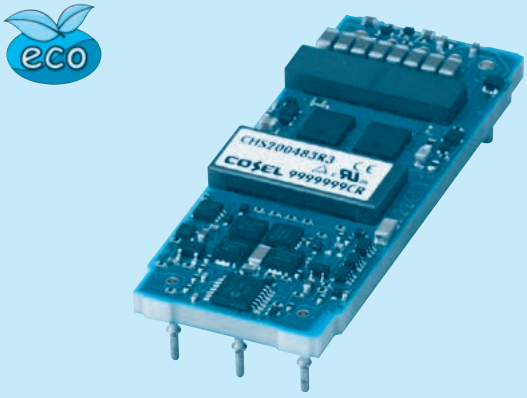

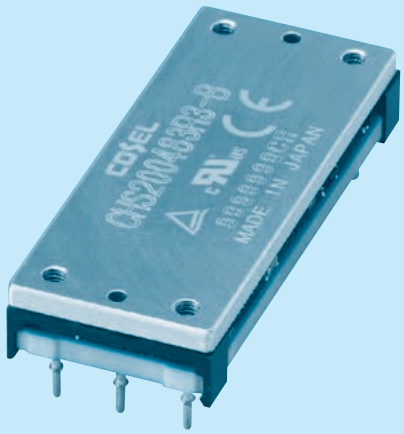

①Series name
②Single output
③Output power
④Input voltage
48:DC36-76V
⑤Output voltage
3R3:3.3V
05:5.0V
12:12V
⑧Optional
R :with Remote ON/OFF Positive logic control
U :Shut down in protection circuit working
B :BasePlate option with Mounting hole M3
L2:Pin length 5.3mm
L5:5pins option (+S,-S,TRM less)

MODEL	CHS200483R3	CHS2004805	CHS2004812
MAX OUTPUT WATTAGE[W]	165.0	200.0	192.0
DC OUTPUT	3.3V 50A	5.0V 40A	12V 16A

SPECIFICATIONS

	MODEL		CHS200483R3	CHS2004805	CHS2004812
INPUT	VOLTAGE[V]		DC36 - 76		
	CURRENT[A]	*1	3.70typ	4.43typ	4.26typ
	EFFICIENCY[%]	*1	93typ	94typ	94typ
OUTPUT	VOLTAGE[V]		3.3	5	12
	CURRENT[A]		50	40	16
	LINE REGULATION[mV]		10max		
	LOAD REGULATION[mV]		10max		
	RIPPLE	[mVrms] *2	30max	30max	50max
		[mVp-p] *2	80max	100max	150max
	RIPPLE NOISE[mVp-p]	*2	120max	150max	180max
	TEMPERATURE REGULATION[mV]		66max	100max	240max
	DRIFT[mV]	*3	16max	20max	40max
	START-UP TIME[ms]		200max (DCIN 48V, Io=100%)		
	OUTPUT VOLTAGE ADJUSTMENT RANGE	*4	Fixed (TRM pin open), adjustable by external resistor		
			-10% / +15%	-10% / +20%	-10% / +10%
	OUTPUT VOLTAGE SETTING		±1.6%		
PROTECTION CIRCUIT AND OTHERS	OVERCURRENT PROTECTION		Works over 105% of rating (Auto restart)		
	OVERVOLTAGE PROTECTION		120% - 140% (Auto restart)	125% - 145% (Auto restart)	115% - 135% (Auto restart)
	REMOTE SENSING		Provided		
	REMOTE ON/OFF		Provided (Negative logic L:ON, H:OFF)		
ISOLATION	INPUT-OUTPUT		DC2,250V or AC1,000V 1minute, Cutoff current = 10mA, DC500V 50MΩ min (20±15℃)		
	INPUT-BASEPLATE	*5	DC2,250V or AC1,000V 1minute, Cutoff current = 10mA, DC500V 50MΩ min (20±15℃)		
	OUTPUT-BASEPLATE	*5	AC500V 1minute, Cutoff current = 100mA, DC500V 50MΩ min (20±15℃)		
ENVIRONMENT	OPERATING TEMP.,HUMID.AND ALTITUDE		-40 to +85℃, 20 - 95%RH (Non condensing) (Refer to "Derating"), 3,000m (10,000feet) max		
	STORAGE TEMP.,HUMID.AND ALTITUDE		-40 to +100℃, 20 - 95%RH (Non condensing), 9,000m (30,000feet) max		
	VIBRATION		10 - 55Hz, 49.0m/s² (5G), 3minutes period, 60minutes each along X, Y and Z axis		
	IMPACT		196.1m/s² (20G), 11ms, once each along X, Y and Z axis		
SAFETY	AGENCY APPROVALS		UL60950-1, C-UL (CSA60950-1), EN62368-1		
OTHERS	CASE SIZE/WEIGHT		57.9×10.5×22.76mm [2.28×0.41×0.9 inches] (W×H×D) / 30g max		
			58.4×12.7×23.26mm [2.3×0.5×0.92 inches] (W×H×D) / 45g max	*5	
	COOLING METHOD		Convection / Forced air / Conduction		

*1 At rated input(DC48V) and rated load. Ta=25℃, 2m/s.
*2 Ripple and ripple noise is measured by using measuring board with ceramic capacitor 22μF.
*3 Drift is the change in DC output for an eight hour period after a half-hour warm-up at 25℃, with the input voltage held constant at the rated input/output.
*4 Refer to the instruction manual for input voltage derating.
*5 BasePlate Option.

External view

1. DIP

※ Tolerance : ±0.5 [±0.02]
※ Dimensions in mm, [ ]=inches

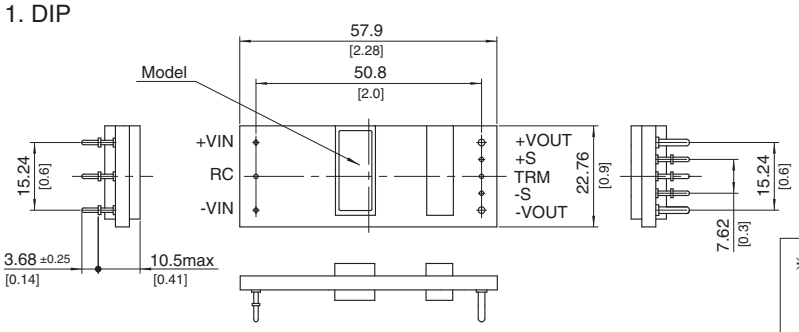

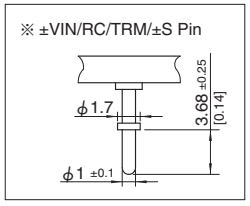

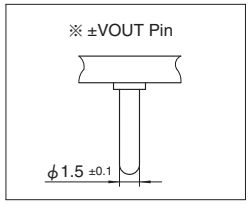

2. BasePlate (optionB)

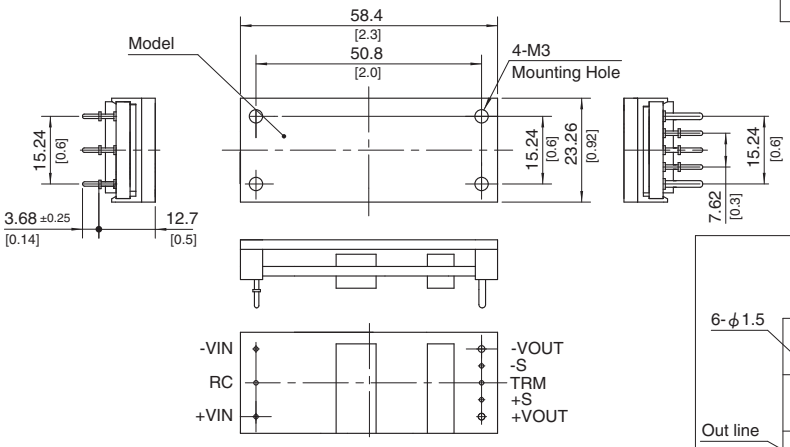

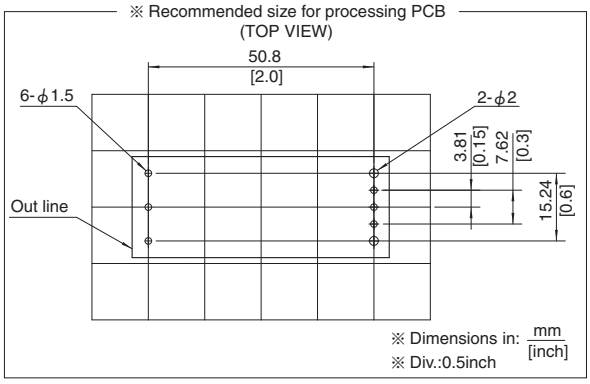

3. 5pins type (option L5)

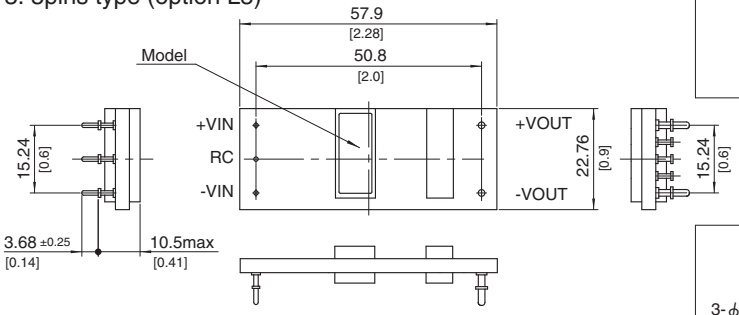

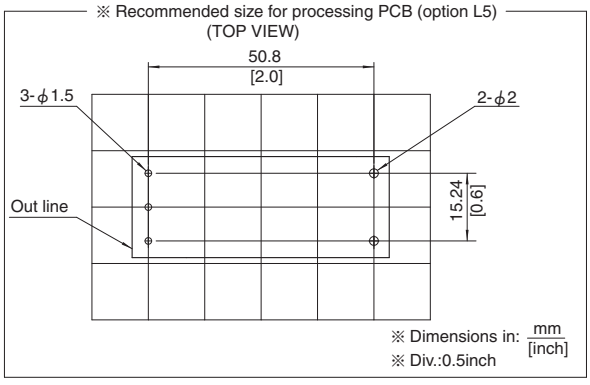

COSEL DC-DC Converters Bus Converter・Power Module Type

CHS300

Ordering information

CH	S	300	48	10	-□
①	②	③	④	⑤	⑧

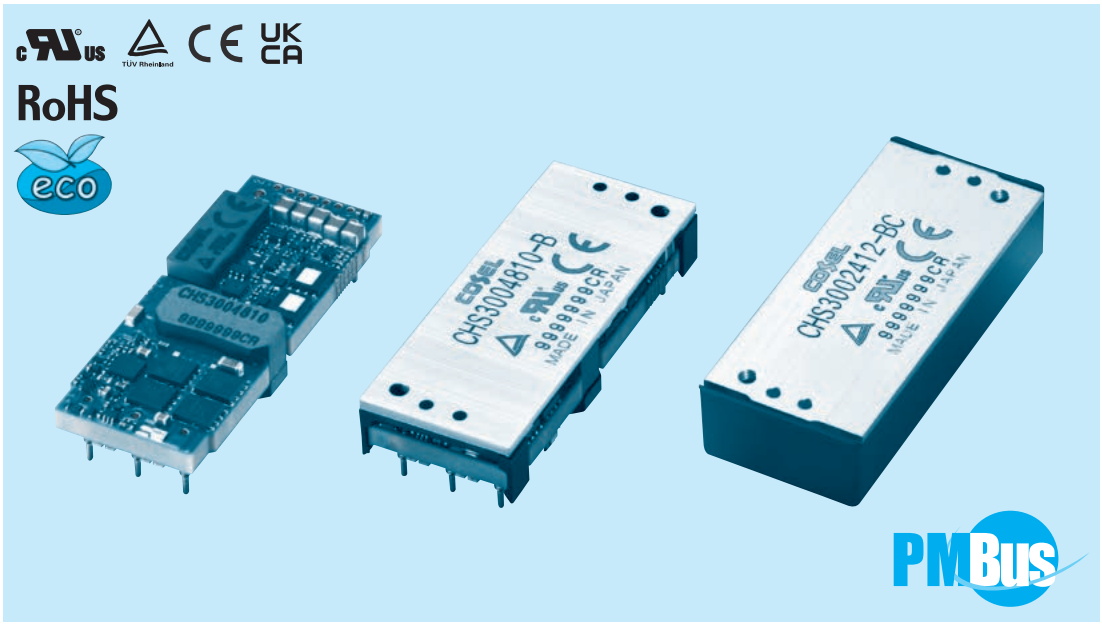

①Series name
②Single output
③Output power
④Input voltage
24:DC18 - 36V
48:DC36 - 76V
⑤Output voltage
05:5V
10:10V
12:12V
12H:12V (High efficiency type)
15:15V
24:24V
28:28V
32:32V
48:48V
⑧Optional
R :with Remote ON/OFF Positive logic control
U :Shut down in protection circuit working
B :Baseplate option with mounting hole M3
BC:Baseplate and case option with mounting hole M3 (only CHS30024)
L2:Pin length 5.3mm
L5:5pins option (+S,-S,TRM less)
I :with the PMBus interface (only CHS3004810/4812)

MODEL	CHS3002405	CHS3002412	CHS3002415	CHS3002424	CHS3002428	CHS3002432	CHS3002448
MAX OUTPUT WATTAGE[W]	200.0	200.4	202.5	252.0	252.0	252.8	254.4
DC OUTPUT	5V 40A	12V 16.7A	15V 13.5A	24V 10.5A	28V 9A	32V 7.9A	48V 5.3A

SPECIFICATIONS

	MODEL	CHS3002405	CHS3002412	CHS3002415	CHS3002424	CHS3002428	CHS3002432	CHS3002448
INPUT	VOLTAGE[V]	DC18 - 36						
	CURRENT[A] *1	8.91typ	9.08typ	9.02typ	11.17typ	11.17typ	11.21typ	11.34typ
	EFFICIENCY[%] *1	93.5typ	92.0typ	93.5typ	94.0typ	94.0typ	94.0typ	93.5typ
OUTPUT	VOLTAGE[V]	5	12	15	24	28	32	48
	CURRENT[A]	40	16.7	13.5	10.5	9	7.9	5.3
	LINE REGULATION[mV]	10max	24max	30max	48max	56max	64max	96max
	LOAD REGULATION[mV]	10max	24max	30max	48max	56max	64max	96max
	RIPPLE [mVrms] *2	40max	50max	100max	90max	90max	90max	110max
	RIPPLE [mVp-p] *2	120max	150max	280max	250max	250max	250max	300max
	RIPPLE NOISE[mVp-p] *2	150max	180max	300max	280max	280max	280max	350max
	TEMPERATURE REGULATION[mV]	120max	240max	300max	480max	560max	640max	960max
	DRIFT[mV] *3	20max	40max	50max	80max	90max	120max	180max
	START-UP TIME[ms]	50max (DCIN 24V, Io=100%)						
	OUTPUT VOLTAGE ADJUSTMENT RANGE *4	Fixed (TRM pin open), adjustable by external resistor						
		-20% / +20%	-20% / +10%	-20% / +5%	-10% / +10%	-10% / +10%	-10% / +10%	-10% / +10%
	OUTPUT VOLTAGE SETTING *1	±1.6%						
PROTECTION CIRCUIT AND OTHERS	OVERCURRENT PROTECTION	Works over 105% of rating (Auto restart)						
	OVERVOLTAGE PROTECTION	125% - 145% (Auto restart)	115% - 135% (Auto restart)	110% - 130% (Auto restart)	115% - 135% (Auto restart)	115% - 135% (Auto restart)	115% - 135% (Auto restart)	115% - 135% (Auto restart)
	REMOTE SENSING	Provided						
	REMOTE ON/OFF	Provided (Negative Logic L : ON, H :OFF)						

MODEL	CHS3004810	CHS3004812	CHS3004812H	CHS3004815	CHS3004824	CHS3004828	CHS3004832	CHS3004848
MAX OUTPUT WATTAGE[W]	300.0	300.0	300.0	300.0	300.0	302.8	300.8	302.4
DC OUTPUT	10V 30A	12V 25A	12V 25A	15V 20A	24V 12.5A	28V 10.8A	32V 9.4A	48V 6.3A

SPECIFICATIONS

	MODEL	CHS3004810	CHS3004812	CHS3004812H	CHS3004815	CHS3004824	CHS3004828	CHS3004832	CHS3004848
INPUT	VOLTAGE[V]	DC36 - 76							
	CURRENT[A] *1	6.61typ	6.61typ	6.55typ	6.61typ	6.61typ	6.67typ	6.63typ	6.70typ
	EFFICIENCY[%] *1	94.5typ	94.5typ	95.5typ	94.5typ	94.5typ	94.5typ	94.5typ	94.0typ
OUTPUT	VOLTAGE[V]	10	12	12	15	24	28	32	48
	CURRENT[A]	30	25	25	20	12.5	10.8	9.4	6.3
	LINE REGULATION[mV] *6	20max	24max	24max	30max	48max	56max	64max	96max
	LOAD REGULATION[mV] *6	20max	24max	24max	30max	48max	56max	64max	96max
	RIPPLE [mVrms] *2	40max	50max	50max	70max	90max	90max	90max	130max
	RIPPLE [mVp-p] *2	120max	150max	150max	180max	250max	250max	250max	350max
	RIPPLE NOISE[mVp-p] *2	150max	180max	180max	200max	280max	280max	280max	380max
	TEMPERATURE REGULATION[mV]	200max	240max	240max	300max	480max	560max	640max	960max
	DRIFT[mV] *3	30max	40max	40max	50max	80max	90max	120max	180max
	START-UP TIME[ms]	50max (DCIN 48V, Io=100%)							
	OUTPUT VOLTAGE ADJUSTMENT RANGE *4	Fixed (TRM pin open), adjustable by external resistor							
		-10% / +10%	-10% / +10%	-10% / +10%	-10% / +10%	-10% / +10%	-10% / +10%	-10% / +10%	-20% / +15%
	OUTPUT VOLTAGE SETTING *1	±1.6%							
PROTECTION CIRCUIT AND OTHERS	OVERCURRENT PROTECTION	Works over 105% of rating (Auto restart)							
	OVERVOLTAGE PROTECTION	115% - 135% (Auto restart)	115% - 135% (Auto restart)	115% - 135% (Auto restart)	115% - 135% (Auto restart)	115% - 135% (Auto restart)	115% - 135% (Auto restart)	115% - 135% (Auto restart)	120% - 140% (Auto restart)
	REMOTE SENSING	Provided							
	REMOTE ON/OFF	Provided (Negative Logic L : ON, H :OFF)							

GENERAL SPECIFICATIONS

ISOLATION	INPUT-OUTPUT	DC2,250V or AC1,000V 1minute, Cutoff current = 10mA, DC500V 50MΩ min (20±15℃)
	INPUT-BASEPLATE *5,*7	DC2,250V or AC1,000V 1minute, Cutoff current = 10mA, DC500V 50MΩ min (20±15℃)
	OUTPUT-BASEPLATE *5,*7	AC500V 1minute, Cutoff current = 100mA, DC500V 50MΩ min (20±15℃)
ENVIRONMENT	OPERATING TEMP.,HUMID.AND ALTITUDE	-40 to +85℃, 20 - 95%RH (Non condensing) (Refer to “Derating”), 5,000m (16,000 feet) max
	STORAGE TEMP.,HUMID.AND ALTITUDE	-40 to +100℃, 20 - 95%RH (Non condensing), 9,000m (30,000 feet) max
	VIBRATION	10 - 55Hz, 49.0m/s² (5G), 3minutes period, 60minutes each along X, Y and Z axis
	IMPACT	196.1m/s² (20G), 11ms, once each along X, Y and Z axis
SAFETY	AGENCY APPROVALS	UL60950-1, C-UL (CSA60950-1), EN62368-1
OTHERS	CASE SIZE/WEIGHT	58.4×11.0×22.86mm [2.3×0.43×0.9 inches] (W×H×D) / 38g max
		58.9×12.7×23.26mm [2.32×0.5×0.92 inches] (W×H×D) / 50g max *5
		61.1×14.3×26.1 [2.41×0.56×1.03inches] (W×H×D) / 57g max *7
	COOLING METHOD	Convection / Forced air / Conduction

*1 At rated input (DC24V, DC48V) and rated load. Ta=25℃, 2m/s.
*2 Ripple and ripple noise is measured by using measuring board with ceramic capacitor 0.1μF or 22μF. (Refer to instruction manual for wiring output pin)
*3 Drift is the change in DC output for an eight hour period after a half-hour warm-up at 25℃, with the input voltage held constant at the rated input/output.
*4 Refer to the instruction manual for input voltage derating.
*5 BasePlate Option.
*6 At input voltage DC36 - 76V (CHS3004810, CHS3004812), DC40 - 76V (CHS3004812H).
*7 Baseplate and case option.

External view

1. DIP

※ Tolerance:±0.5 [±0.02]
※ Dimensions in mm, [ ]=inches

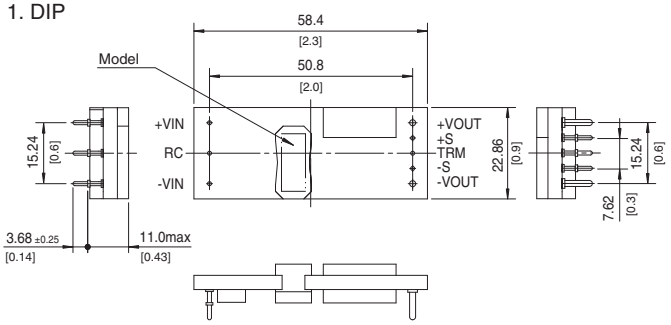

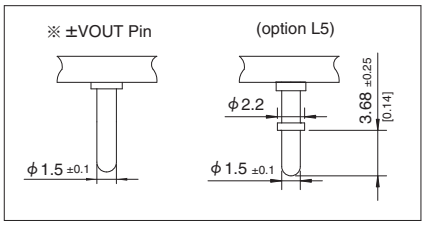

2. BasePlate (optionB)

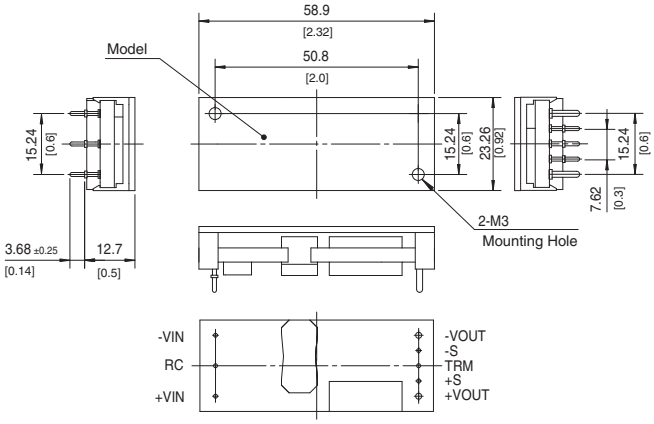

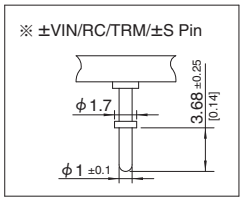

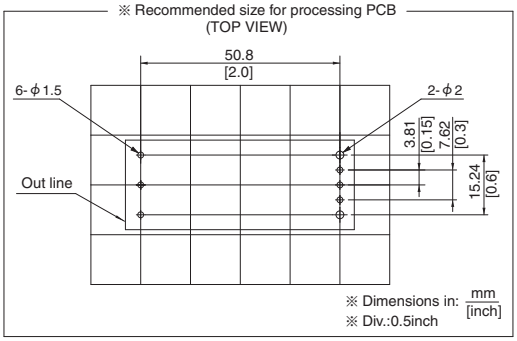

3. Baseplate and case (option BC)

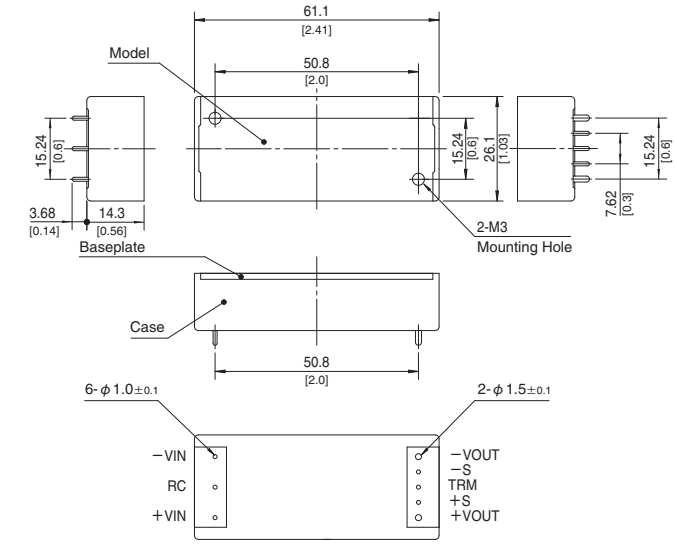

4. 5pins type (option L5)

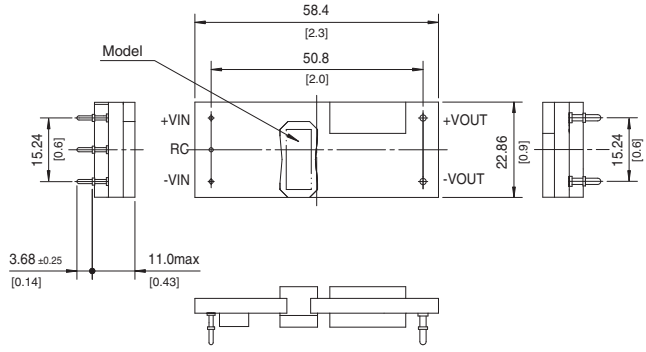

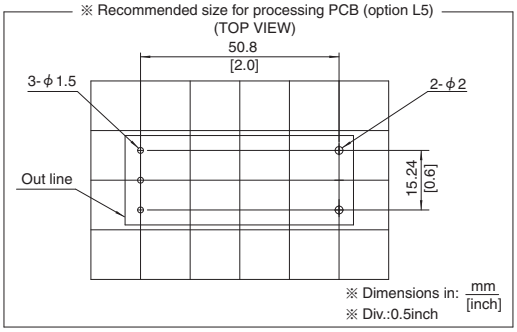

∗Please contact us about external view of the PMBus interface (option I).

COSEL DC-DC Converters Bus Converter・Power Module Type

CHS380

Ordering information

CH	S	380	48	12	-□
①	②	③	④	⑤	⑧

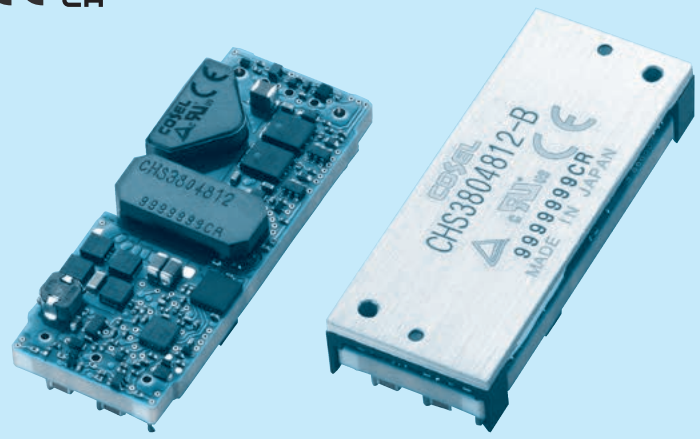

①Series name
②Single output
③Output power
④Input voltage
48:DC36 - 76V
⑤Output voltage
10:10V
12:12V
12H:12V(High efficiency type)
⑧Optional
R :with Remote ON/OFF Positive logic control
U :Shut down in protection circuit working
B :BasePlate option with Mounting hole M3
L2:Pin length 5.3mm
L5:5pins type (+S,-S,TRM less)

MODEL	CHS3804810	CHS3804812	CHS3804812H
MAX OUTPUT WATTAGE[W]	380.0	384.0	384.0
DC OUTPUT	10V 38A	12V 32A	12V 32A

SPECIFICATIONS

	MODEL		CHS3804810	CHS3804812	CHS3804812H
INPUT	VOLTAGE[V]		DC36 - 76		
	CURRENT[A]	*1	8.42typ	8.47typ	8.42typ
	EFFICIENCY[%]	*1	94.0typ	94.5typ	95.0typ
OUTPUT	VOLTAGE[V]		10	12	12
	CURRENT[A]		38	32	32
	LINE REGULATION[mV]	*6	20max	24max	24max
	LOAD REGULATION[mV]	*6	20max	24max	24max
	RIPPLE	[mVrms] *2	40max	50max	60max
		[mVp-p] *2	120max	150max	180max
	RIPPLE NOISE[mVp-p]	*2	150max	180max	200max
	TEMPERATURE REGULATION[mV]		200max	240max	240max
	DRIFT[mV]	*3	30max	40max	40max
	START-UP TIME[ms]		50max (DCIN 48V, Io=100%)		
	OUTPUT VOLTAGE ADJUSTMENT RANGE	*4	Fixed (TRM pin open), adjustable by external resistor		
			-10% / +10%		
	OUTPUT VOLTAGE SETTING	*1	±1.6%		
PROTECTION CIRCUIT AND OTHERS	OVERCURRENT PROTECTION		Works over 105% of rating (Auto restart)		
	OVERVOLTAGE PROTECTION		115% - 135% (Auto restart)		
	REMOTE SENSING		Provided		
	REMOTE ON/OFF		Provided (Negative Logic L : ON, H :OFF)		
ISOLATION	INPUT-OUTPUT		DC2,250V or AC1,000V 1minute, Cutoff current = 10mA, DC500V 50MΩ min (20±15℃)		
	INPUT-BASEPLATE	*5	DC2,250V or AC1,000V 1minute, Cutoff current = 10mA, DC500V 50MΩ min (20±15℃)		
	OUTPUT-BASEPLATE	*5	AC500V 1minute, Cutoff current = 100mA, DC500V 50MΩ min (20±15℃)		
ENVIRONMENT	OPERATING TEMP.,HUMID.AND ALTITUDE		-40 to +85℃, 20 - 95%RH (Non condensing) (Refer to “Derating”), 5,000m (16,000 feet) max		
	STORAGE TEMP.,HUMID.AND ALTITUDE		-40 to +100℃, 20 - 95%RH (Non condensing), 9,000m (30,000 feet) max		
	VIBRATION		10 - 55Hz, 49.0m/s² (5G), 3minutes period, 60minutes each along X, Y and Z axis		
	IMPACT		196.1m/s² (20G), 11ms, once each along X, Y and Z axis		
SAFETY	AGENCY APPROVALS		UL60950-1, C-UL (CSA60950-1), EN62368-1		
OTHERS	CASE SIZE/WEIGHT		58.4×11.0×22.86mm [2.3×0.43×0.9 inches] (W×H×D) / 38g max		
			58.9×12.7×23.26mm [2.32×0.5×0.92 inches] (W×H×D) / 50g max	*5	
	COOLING METHOD		Convection / Forced air / Conduction		

*1 At rated input (DC48V) and rated load. Ta=25℃, 2m/s.
*2 Ripple and ripple noise is measured by using measuring board with ceramic capacitor 22μF.
*3 Drift is the change in DC output for an eight hour period after a half-hour warm-up at 25℃, with the input voltage held constant at the rated input/output.
*4 Refer to the instruction manual for input voltage derating.
*5 BasePlate Option.
*6 At input voltage DC36-76V(CHS3804810, CHS3804812), DC40-76V(CHS3804812H).

External view

1. DIP

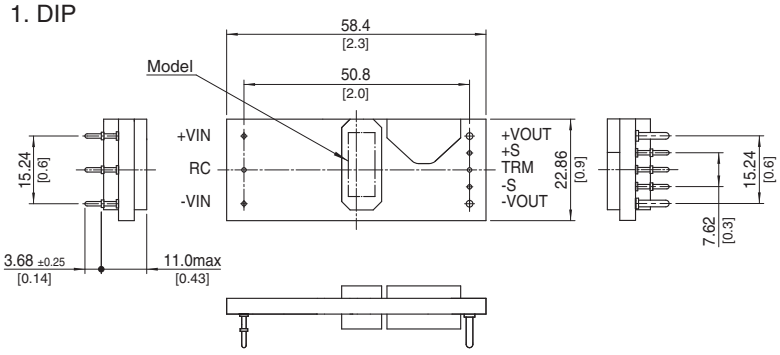

※ Tolerance:±0.5 [±0.02]
※ Dimensions in mm, [ ]=inches

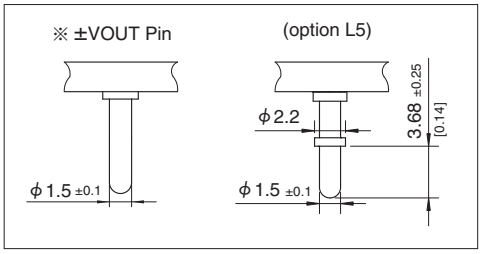

2. BasePlate (optionB)

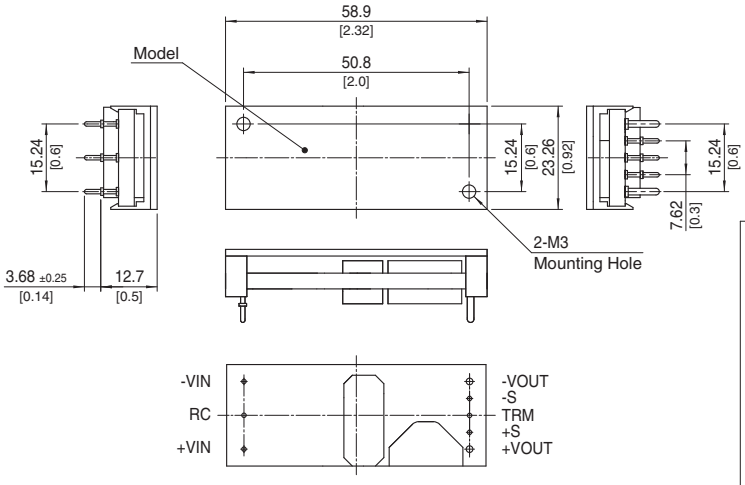

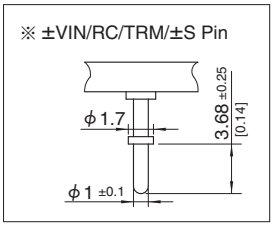

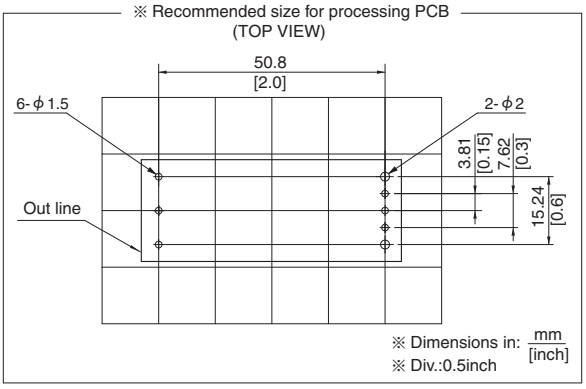

3. Parallel operation (option P)
5pins type (option L5)

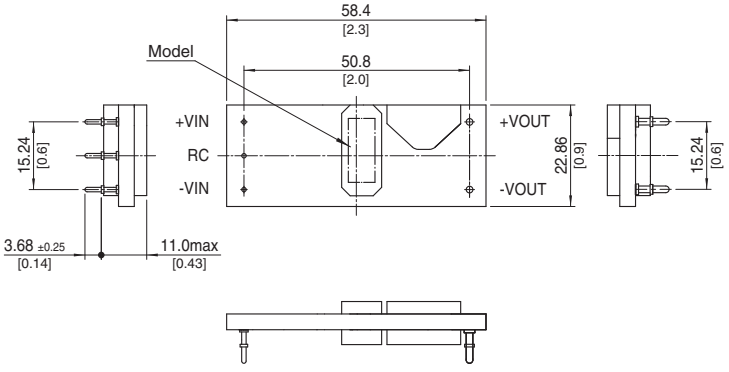

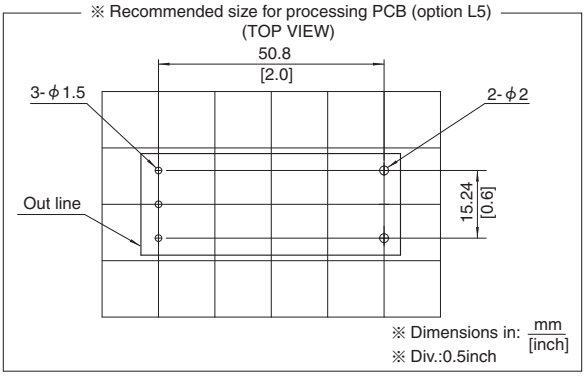

COSEL DC-DC Converters Bus Converter·Power Module Type

CHS400

Ordering information

CH	S	400	48	12	-□
①	②	③	④	⑤	⑧

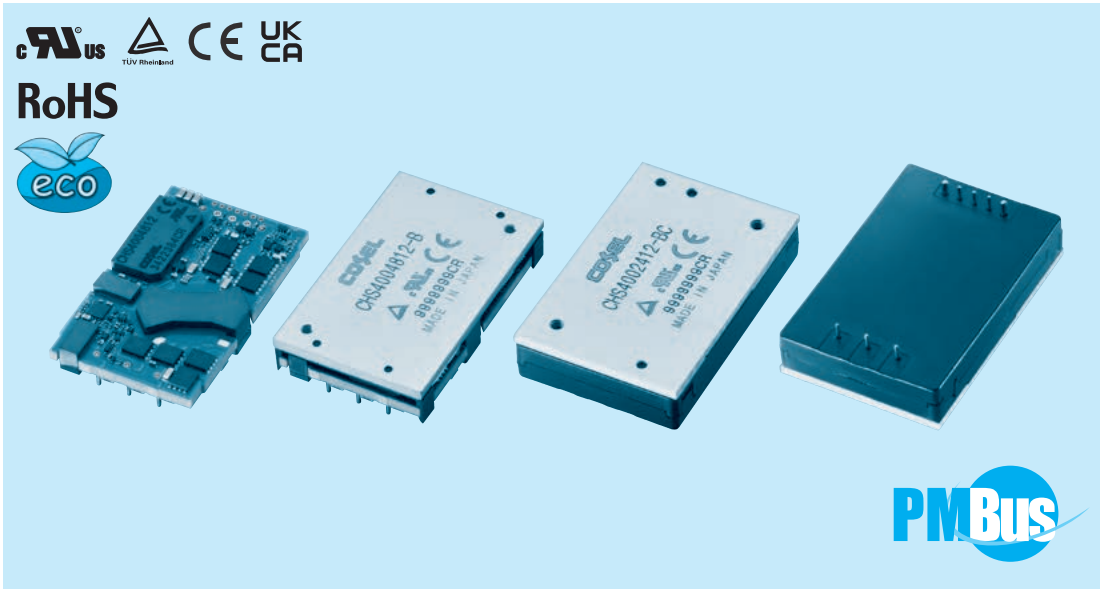

①Series name
②Single output
③Output power
④Input voltage
24:DC18 - 36V
48:DC36 - 76V
⑤Output voltage
10:10V
12:12V
12H:12V(High efficiency type)
15:15V
24:24V
28:28V
32:32V
48:48V
⑧Optional
R :with Remote ON/OFF Positive logic control
U :Shut down in protection circuit working
B :BasePlate option with Mounting hole M3
BC:Baseplate and case option with Mounting hole M3 (only CHS40024)
P :Parallel operation (5Pins :without +S,-S and TRM) (only CHS4004810/12/12H)
L2:Pin length 5.3mm
L5:5pins type (+S,-S,TRM less)
I :with the PMBus interface (Only CHS4004812)

MODEL	CHS4002412	CHS4002415	CHS4002424	CHS4002428	CHS4002432	CHS4002448
MAX OUTPUT WATTAGE[W]	318.0	397.5	348.0	350.0	352.0	302.4
DC OUTPUT	12V 26.5A	15V 26.5A	24V 14.5A	28V 12.5A	32V 11A	48V 6.3A

SPECIFICATIONS

	MODEL		CHS4002412	CHS4002415	CHS4002424	CHS4002428	CHS4002432	CHS4002448
INPUT	VOLTAGE[V]		DC18 - 36					
	CURRENT[A]	*1	14.17typ	17.53typ	15.43typ	15.51typ	15.60typ	13.40typ
	EFFICIENCY[%]	*1	93.5typ	94.5typ	94.0typ	94.0typ	94.0typ	94.0typ
OUTPUT	VOLTAGE[V]		12	15	24	28	32	48
	CURRENT[A]		26.5	26.5	14.5	12.5	11	6.3
	LINE REGULATION[mV]		24max	30max	48max	56max	64max	96max
	LOAD REGULATION[mV]		24max	30max	48max	56max	64max	96max
	RIPPLE	[mVrms] *2	60max	60max	90max	90max	90max	110max
		[mVp-p] *2	180max	180max	250max	250max	250max	300max
	RIPPLE NOISE[mVp-p]	*2	200max	200max	280max	280max	280max	350max
	TEMPERATURE REGULATION[mV]		240max	300max	480max	560max	640max	960max
	DRIFT[mV]	*3	40max	50max	80max	90max	120max	180max
	START-UP TIME[ms]		50max (DCIN 24V, Io=100%)					
	OUTPUT VOLTAGE ADJUSTMENT RANGE[V]	*4	Fixed (TRM pin open), adjustable by external resistor					
			-20% / +10%	-20% / +5%	-20% / +10%	-20% / +10%	-20% / +10%	-20% / +10%
	OUTPUT VOLTAGE SETTING[V]	*1	±1.6%	±1.6%	±1.6%	±1.6%	±1.6%	±1.6%
PROTECTION CIRCUIT AND OTHERS	OVERCURRENT PROTECTION		Works over 105% of rating (Auto restart)					
	OVERVOLTAGE PROTECTION		115% - 135% (Auto restart)	110% - 130% (Auto restart)	115% - 135% (Auto restart)	115% - 135% (Auto restart)	115% - 135% (Auto restart)	115% - 135% (Auto restart)
	REMOTE SENSING		Provided					
	REMOTE ON/OFF		Provided (Negative Logic L : ON, H :OFF)					

MODEL	CHS4004810	CHS4004812	CHS4004812H	CHS4004815	CHS4004824	CHS4004828	CHS4004832	CHS4004848
MAX OUTPUT WATTAGE[W]	400.0	396.0	396.0	397.5	396.0	392.0	400.0	403.2
DC OUTPUT	10V 40A	12V 33A	12V 33A	15V 26.5A	24V 16.5A	28V 14A	32V 12.5A	48V 8.4A

SPECIFICATIONS

	MODEL	CHS4004810	CHS4004812	CHS4004812H	CHS4004815	CHS4004824	CHS4004828	CHS4004832	CHS4004848
INPUT	VOLTAGE[V]	DC36 - 76							
	CURRENT[A] *1	8.82typ	8.68typ	8.64typ	8.76typ	8.73typ	8.64typ	8.82typ	8.94typ
	EFFICIENCY[%] *1	94.5typ	95typ	95.5typ	94.5typ	94.5typ	94.5typ	94.5typ	94.0typ
OUTPUT	VOLTAGE[V]	10	12	12	15	24	28	32	48
	CURRENT[A]	40	33	33	26.5	16.5	14	12.5	8.4
	LINE REGULATION[mV] *8	20max	24max	24max	30max	48max	56max	64max	96max
	LOAD REGULATION[mV] *7 *8	20max	24max	24max	30max	48max	56max	64max	96max
	RIPPLE [mVrms] *2	60max	60max	60max	70max	100max	100max	100max	110max
	RIPPLE [mVp-p] *2	160max	180max	180max	200max	280max	280max	280max	300max
	RIPPLE NOISE[mVp-p] *2	180max	200max	200max	220max	300max	300max	300max	350max
	TEMPERATURE REGULATION[mV]	200max	240max	240max	300max	480max	560max	640max	960max
	DRIFT[mV] *3	30max	40max	40max	50max	80max	90max	120max	180max
	START-UP TIME[ms]	50max (DCIN 48V, Io=100%)							
	OUTPUT VOLTAGE ADJUSTMENT RANGE[V] *4	Fixed (TRM pin open), adjustable by external resistor (N/A : parallel operation)							
		-10% / +10%	-10% / +10%	-10% / +10%	-20% / +10%	-20% / +10%	-20% / +10%	-20% / +10%	-20% / +10%
	OUTPUT VOLTAGE SETTING[V] *1 *7	±1.6%	±1.6%	±1.6%	±1.6%	±1.6%	±1.6%	±1.6%	±1.6%
PROTECTION CIRCUIT AND OTHERS	OVERCURRENT PROTECTION	Works over 105% of rating (Auto restart)							
	OVERVOLTAGE PROTECTION	115% - 135% (Auto restart)							
	REMOTE SENSING	Provided (N/A : parallel operation)							
	REMOTE ON/OFF	Provided (Negative Logic L : ON, H :OFF)							

GENERAL SPECIFICATIONS

ISOLATION	INPUT-OUTPUT	DC2,250V or AC1,000V 1minute, Cutoff current = 10mA, DC500V 50MΩ min (20±15℃)
	INPUT-BASEPLATE *5,*6	DC2,250V or AC1,000V 1minute, Cutoff current = 10mA, DC500V 50MΩ min (20±15℃)
	OUTPUT-BASEPLATE *5,*6	AC500V 1minute, Cutoff current = 100mA, DC500V 50MΩ min (20±15℃)
ENVIRONMENT	OPERATING TEMP.,HUMID.AND ALTITUDE	-40 to +85℃, 20 - 95%RH (Non condensing) (Refer to “Derating”), 5,000m (16,000 feet) max
	STORAGE TEMP.,HUMID.AND ALTITUDE	-40 to +100℃, 20 - 95%RH (Non condensing), 9,000m (30,000 feet) max
	VIBRATION	10 - 55Hz, 49.0m/s² (5G), 3minutes period, 60minutes each along X, Y and Z axis
	IMPACT	196.1m/s² (20G), 11ms, once each along X, Y and Z axis
SAFETY	AGENCY APPROVALS	UL60950-1, C-UL (CSA60950-1), EN62368-1
OTHERS	CASE SIZE/WEIGHT	58.4×9.5×36.8mm [2.3×0.37×1.45 inches] (W×H×D) / 60g max
		58.9×12.7×37.3mm [2.32×0.5×1.47 inches] (W×H×D) / 90g max *5
		61.6×12.7×40.3mm [2.43×0.5×1.59 inches] (W×H×D) / 90g max *6
	COOLING METHOD	Convection / Forced air / Conduction

*1 At rated input (DC24V, DC48V) and rated load. Ta=25℃, 2m/s.
*2 Ripple and ripple noise is measured by using measuring board with ceramic capacitor 0.1 μF or 22 μF. (Refer to instruction manual for wiring output pin)
*3 Drift is the change in DC output for an eight hour period after a half-hour warm-up at 25℃, with the input voltage held constant at the rated input/output.
*4 Refer to the instruction manual for input voltage derating.
*5 Baseplate Option.
*6 Baseplate and case option.
*7 Parallel operation Option is not included.
*8 At input voltage DC36-76V(CHS4004810, CHS4004812), DC40-76V(CHS4004812H).

External view

1. DIP

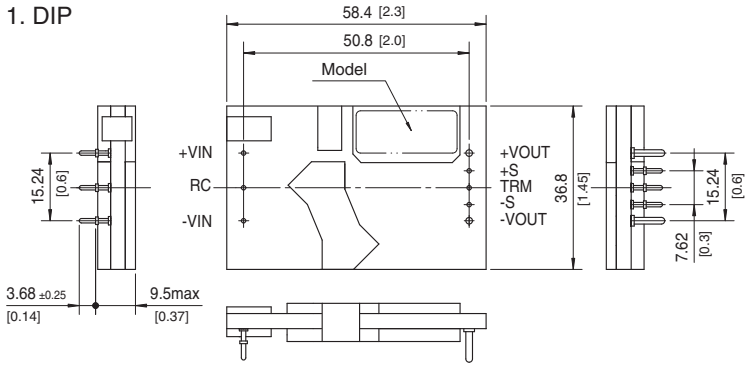

※ Tolerance:±0.5 [±0.02]
※ Dimensions in mm, [ ]=inches

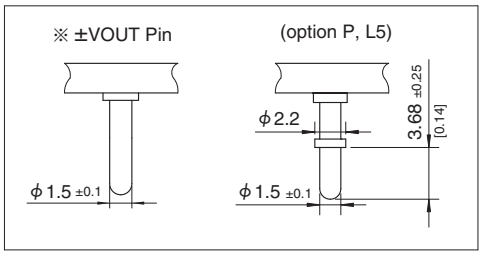

2. BasePlate (optionB)

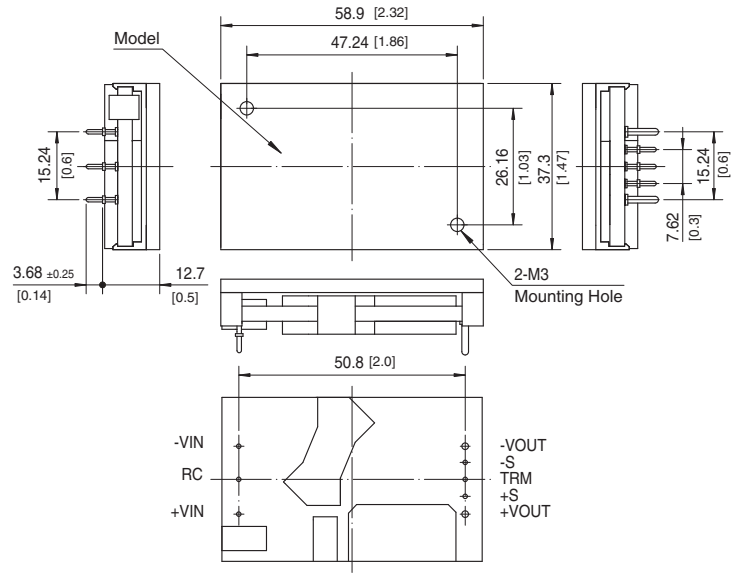

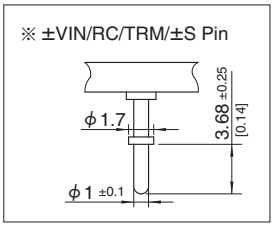

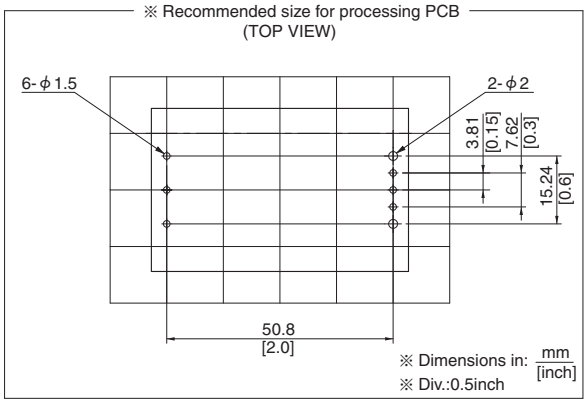

3. Baseplate and case (optionBC)

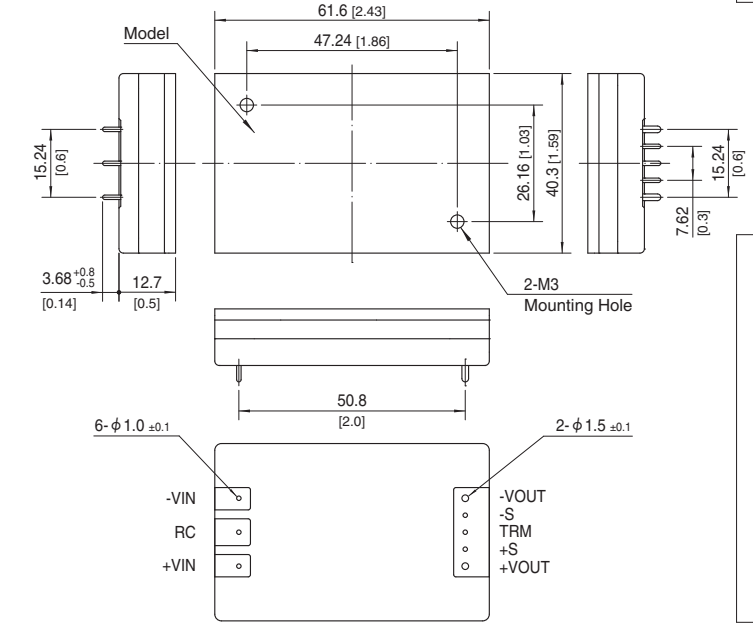

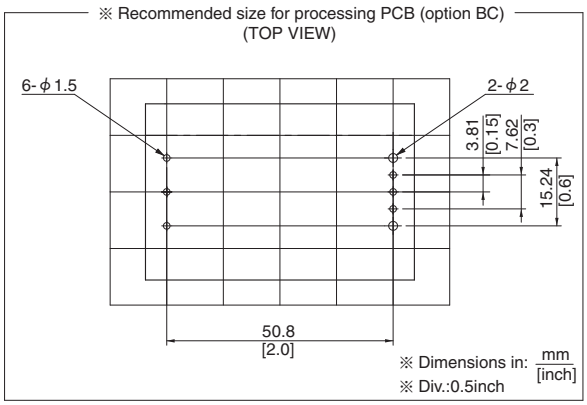

External view

4. Parallel operation (option P)
   5pins type (option L5)

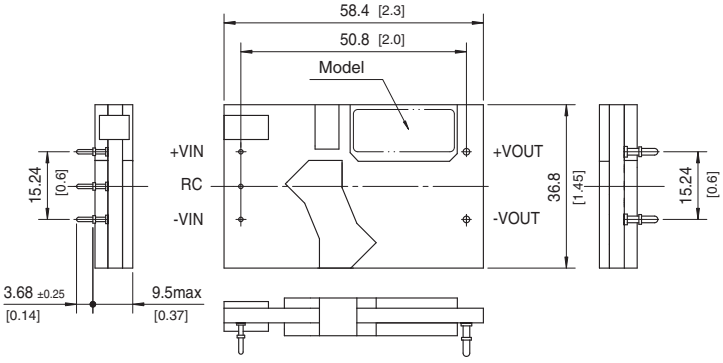

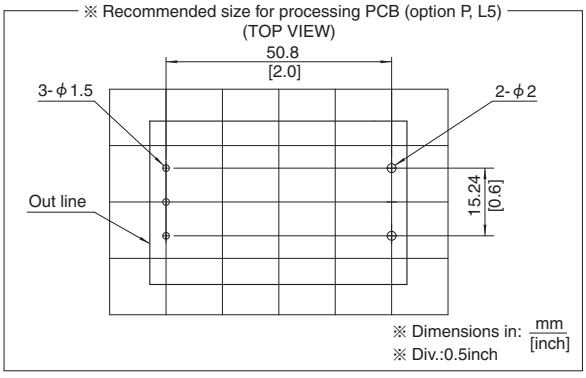

✻Please contact us about external view of the PMBus interface (option I).

COSEL DC-DC Converters Bus Converter·Power Module Type

CHS500

Ordering information

CH	S	500	48	12	-□
①	②	③	④	⑤	⑧

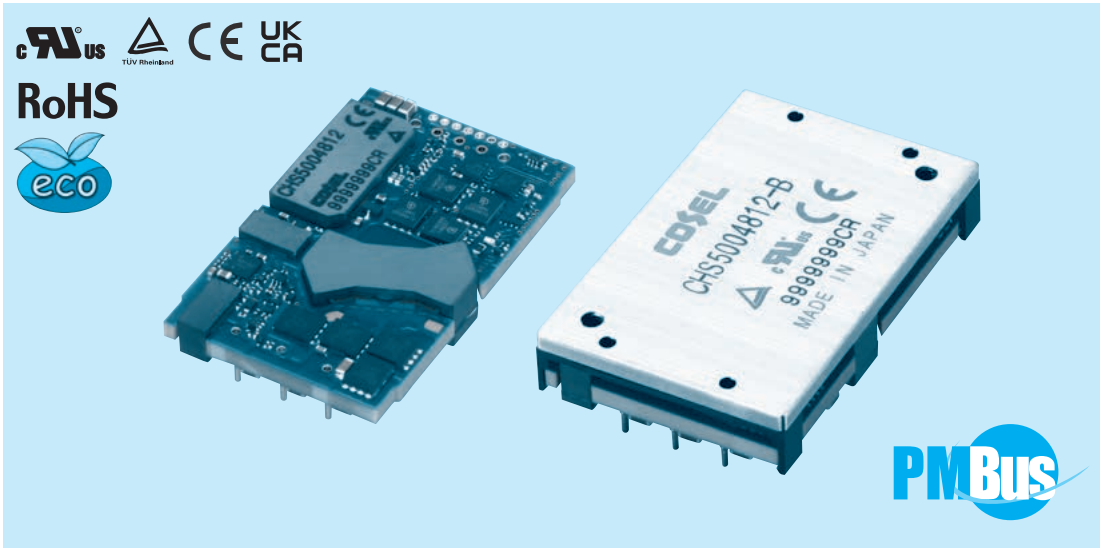

①Series name
②Single output
③Output power
④Input voltage
48:DC36 - 76V
⑤Output voltage
12:12V
⑧Optional
R :with Remote ON/OFF Positive logic control
U :Shut down in protection circuit working
B :BasePlate option with Mounting hole M3
P :Parallel operation (5Pins :without +S,-S and TRM)
L2:Pin length 5.3mm
L5:5pins type (+S,-S,TRM less)
I :with the PMBus interface (Only CHS5004812)

MODEL	CHS5004812
MAX OUTPUT WATTAGE[W]	504.0
DC OUTPUT	12V 42A

SPECIFICATIONS

	MODEL		CHS5004812
INPUT	VOLTAGE[V]		DC36 - 76
	CURRENT[A]	*1	11.06typ
	EFFICIENCY[%]	*1	95typ
OUTPUT	VOLTAGE[V]		12
	CURRENT[A]		42
	LINE REGULATION[mV]		24max
	LOAD REGULATION[mV]	*6	24max
	RIPPLE	[mVrms] *2	60max
		[mVp-p] *2	180max
	RIPPLE NOISE[mVp-p]	*2	200max
	TEMPERATURE REGULATION[mV]		240max
	DRIFT[mV]	*3	40max
	START-UP TIME[ms]		50max (DCIN 48V, Io=100%)
	OUTPUT VOLTAGE ADJUSTMENT RANGE[V]	*4	Fixed (TRM pin open), adjustable by external resistor (N/A : parallel operation)
			-10% / +10%
	OUTPUT VOLTAGE SETTING[V]	*1 *6	±1.6%
PROTECTION CIRCUIT AND OTHERS	OVERCURRENT PROTECTION		Works over 105% of rating (Auto restart)
	OVERVOLTAGE PROTECTION		115% - 135% (Auto restart)
	REMOTE SENSING		Provided (N/A : parallel operation)
	REMOTE ON/OFF		Provided (Negative Logic L : ON, H :OFF)
ISOLATION	INPUT-OUTPUT		DC2,250V or AC1,000V 1minute, Cutoff current = 10mA, DC500V 50MΩ min (20±15℃)
	INPUT-BASEPLATE	*5	DC2,250V or AC1,000V 1minute, Cutoff current = 10mA, DC500V 50MΩ min (20±15℃)
	OUTPUT-BASEPLATE	*5	AC500V 1minute, Cutoff current = 100mA, DC500V 50MΩ min (20±15℃)
ENVIRONMENT	OPERATING TEMP.,HUMID.AND ALTITUDE		-40 to +85℃, 20 - 95%RH (Non condensing) (Refer to “Derating”), 5,000m (16,000 feet) max
	STORAGE TEMP.,HUMID.AND ALTITUDE		-40 to +100℃, 20 - 95%RH (Non condensing), 9,000m (30,000 feet) max
	VIBRATION		10 - 55Hz, 49.0m/s² (5G), 3minutes period, 60minutes each along X, Y and Z axis
	IMPACT		196.1m/s² (20G), 11ms, once each along X, Y and Z axis
SAFETY	AGENCY APPROVALS		UL60950-1, C-UL (CSA60950-1), EN62368-1
OTHERS	CASE SIZE/WEIGHT		58.4×9.5×36.8mm [2.3×0.37×1.45 inches] (W×H×D) / 60g max
			58.9×12.7×37.3mm [2.32×0.5×1.47 inches] (W×H×D) / 90g max *5
	COOLING METHOD		Convection / Forced air / Conduction

*1 At rated input (DC48V) and rated load. Ta=25℃, 2m/s.
*2 Ripple and ripple noise is measured by using measuring board with ceramic capacitor 22μF.
*3 Drift is the change in DC output for an eight hour period after a half-hour warm-up at 25℃, with the input voltage held constant at the rated input/output.
*4 Refer to the instruction manual for input voltage derating.
*5 BasePlate Option.
*6 Parallel operation Option is not included.

External view

1. DIP

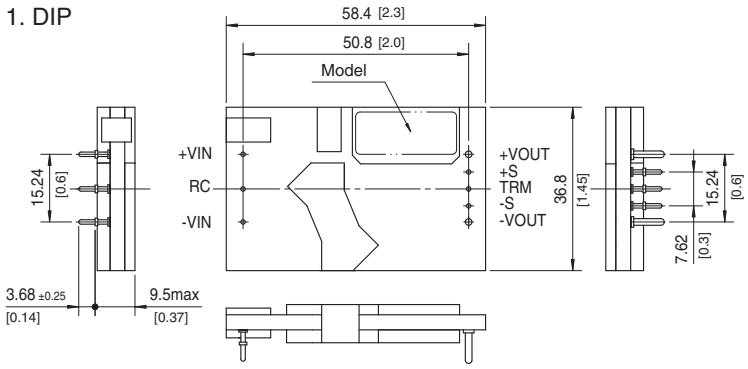

※ Tolerance:±0.5 [±0.02]
※ Dimensions in mm, [ ]=inches

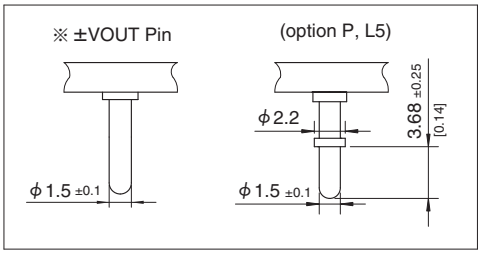

2. BasePlate (optionB)

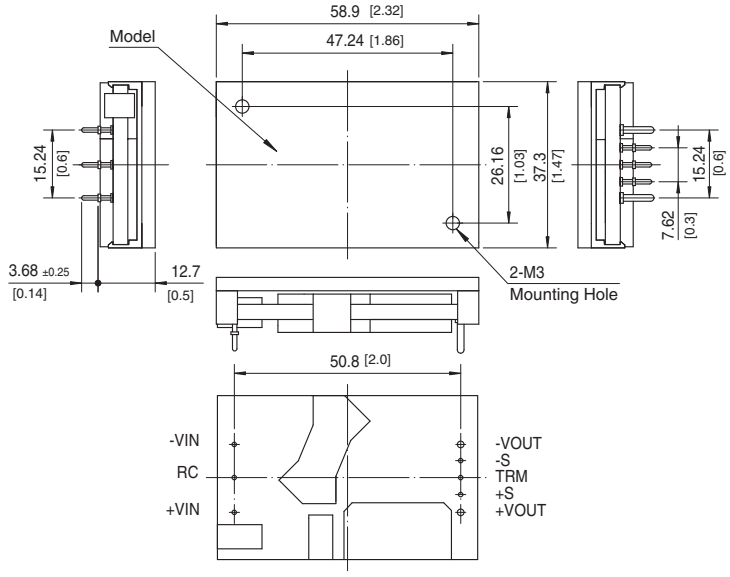

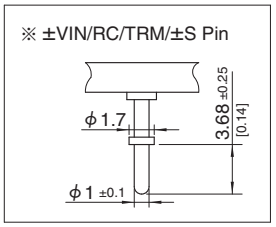

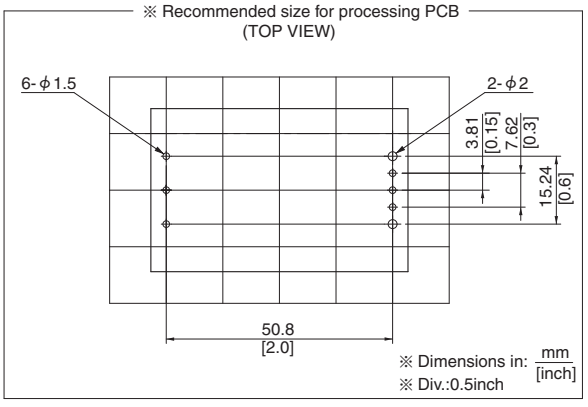

3. Parallel operation (option P)
5pins type (option L5)

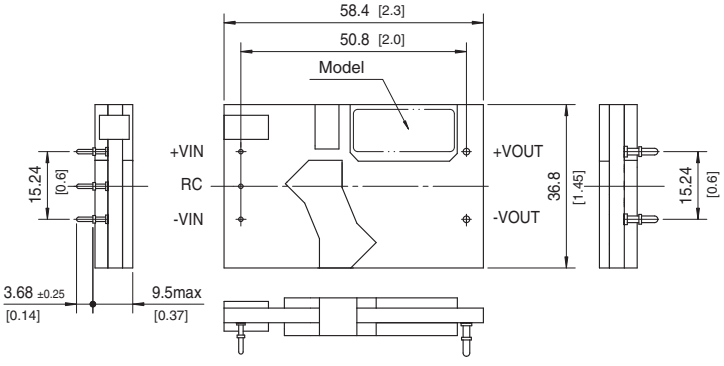

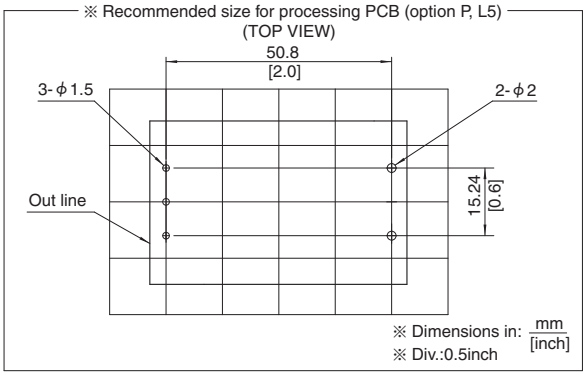

∗Please contact us about external view of the PMBus interface (option I).

COSEL DC-DC Converters Bus Converter・Power Module Type

CHS700

Ordering information

CH	S	700	48	12	-□
①	②	③	④	⑤	⑧

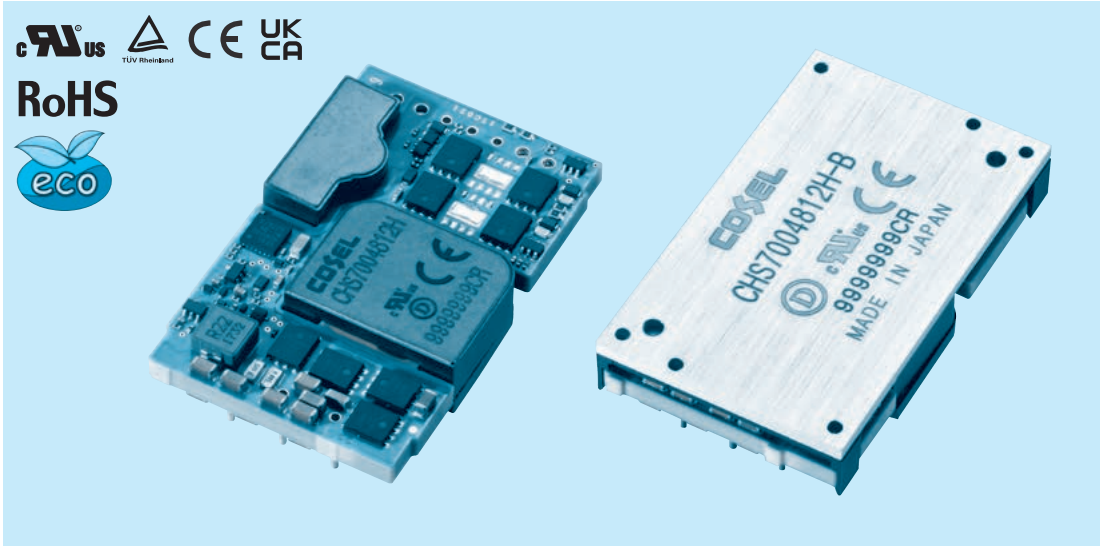

①Series name
②Single output
③Output power
④Input voltage
48:DC36 - 76V
⑤Output voltage
12H:12V (High efficiency type)
⑧Optional
R :with Remote ON/OFF Positive logic control
U :Shut down in protection circuit working
B :BasePlate option with Mounting hole M3
L2:Pin length 5.3mm
L5:5pins type (Pin No. 4, 6, 7, 8, 10 less)
L7:7pins type (Pin No. 6, 7, 8 less)
L8:8pins type (Pin No. 4, 10 less)
*Refer to the "Pin Configuration" for pin assign.

MODEL	CHS7004812H
MAX OUTPUT WATTAGE[W]	702.0
DC OUTPUT	12V 58.5A

SPECIFICATIONS

	MODEL		CHS7004812H
INPUT	VOLTAGE[V]		DC36 - 76
	CURRENT[A]	*1	15.3typ
	EFFICIENCY[%]	*1	96typ
OUTPUT	VOLTAGE[V]		12
	CURRENT[A]		58.5
	LINE REGULATION[mV]	*6	24max
	LOAD REGULATION[mV]	*6	24max
	RIPPLE	[mVrms] *2	80max
		[mVp-p] *2	240max
	RIPPLE NOISE[mVp-p]	*2	280max
	TEMPERATURE REGULATION[mV]		240max
	DRIFT[mV]	*3	40max
	START-UP TIME[ms]		50max (DCIN 48V, Io=100%)
	OUTPUT VOLTAGE ADJUSTMENT RANGE[V]	*4	Fixed (TRM pin open), adjustable by external resistor
			-20% / +10%
	OUTPUT VOLTAGE SETTING[V]	*1 *6	±1.6%
PROTECTION CIRCUIT AND OTHERS	OVERCURRENT PROTECTION		Works over 105% of rating (Auto restart)
	OVERVOLTAGE PROTECTION		115% - 135% (Auto restart)
	REMOTE SENSING		Provided
	REMOTE ON/OFF		Provided (Negative Logic L : ON, H : OFF)
ISOLATION	INPUT-OUTPUT		DC2,250V or AC1,000V 1minute, Cutoff current = 10mA, DC500V 50MΩ min (20±15℃)
	INPUT-BASEPLATE	*5	DC2,250V or AC1,000V 1minute, Cutoff current = 10mA, DC500V 50MΩ min (20±15℃)
	OUTPUT-BASEPLATE	*5	AC500V 1minute, Cutoff current = 100mA, DC500V 50MΩ min (20±15℃)
ENVIRONMENT	OPERATING TEMP.,HUMID.AND ALTITUDE		-40 to +85℃, 20 - 95%RH (Non condensing) (Refer to "Derating"), 5,000m (16,000 feet) max
	STORAGE TEMP.,HUMID.AND ALTITUDE		-40 to +100℃, 20 - 95%RH (Non condensing), 9,000m (30,000 feet) max
	VIBRATION		10-55Hz 49.0m/s² (5G), 3minutes period, 60minutes each along X, Y and Z axis
	IMPACT		196.1m/s² (20G), 11ms, once each along X, Y and Z axis
SAFETY	AGENCY APPROVALS		UL62368-1, C-UL (CSA62368-1), EN62368-1
OTHERS	CASE SIZE/WEIGHT		58.4×10.5×36.8mm [2.3×0.41×1.45 inches] (W×H×D) / 72g max
			58.9×12.7×37.3mm [2.32×0.5×1.47 inches] (W×H×D) / 100g max *5
	COOLING METHOD		Convection / Forced air / Conduction

*1 At rated input (DC48V) and rated load. Ta=25℃, 2m/s.
*2 Ripple and ripple noise is measured by using measuring board with ceramic capacitor 22μF
*3 Drift is the change in DC output for an eight hour period after a half-hour warm-up at 25℃, with the input voltage held constant at the rated input/output.
*4 Refer to the instruction manual for input voltage derating.
*5 BasePlate Option.
*6 At input voltage DC40-76V.

External view

1. DIP

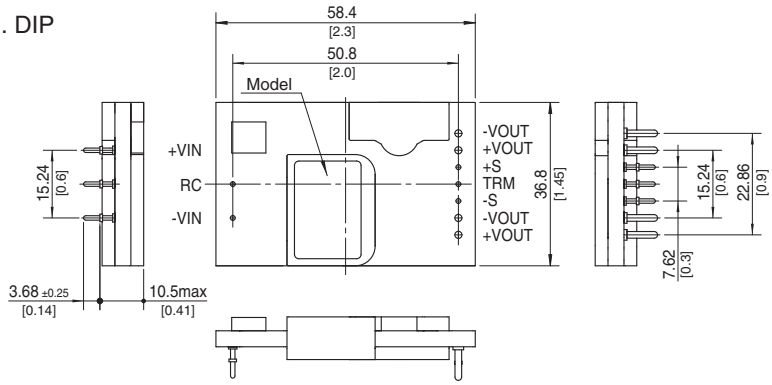

※ Tolerance:±0.5
※ Dimensions in mm, [ ]=inches

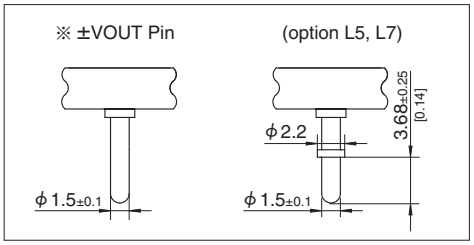

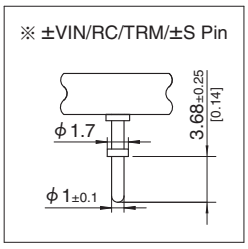

2. BasePlate (optionB)

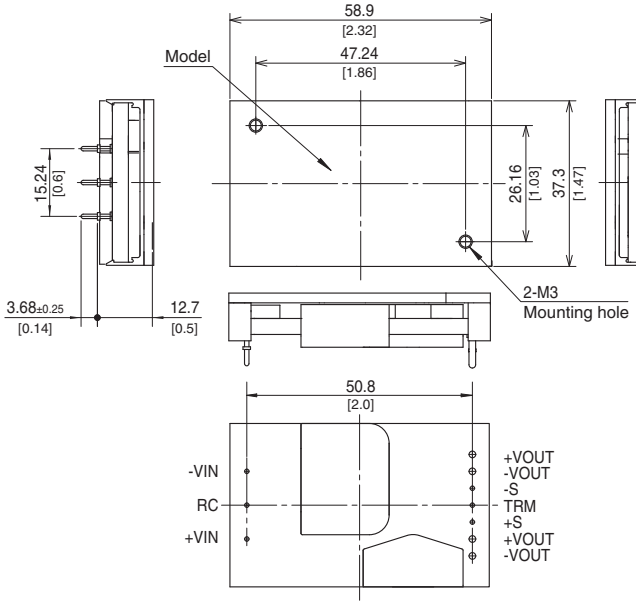

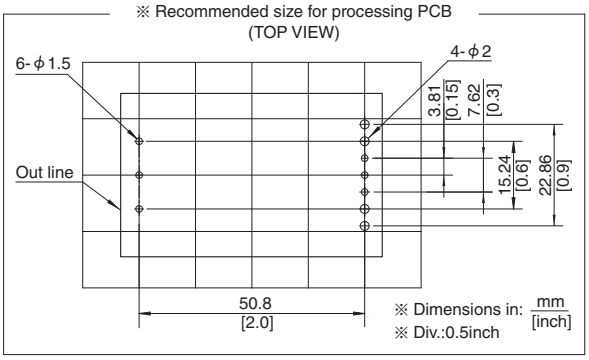

3. 5pins type (option L5)

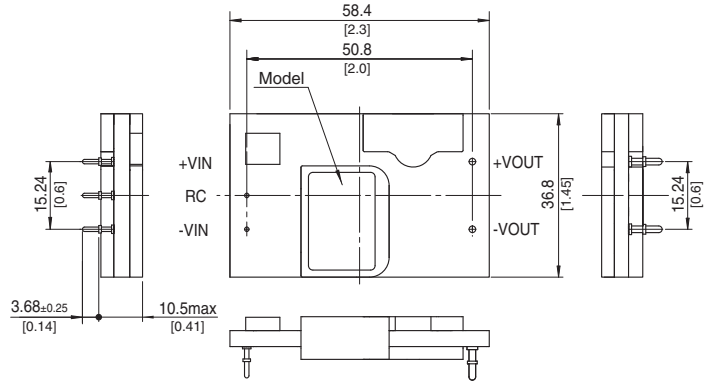

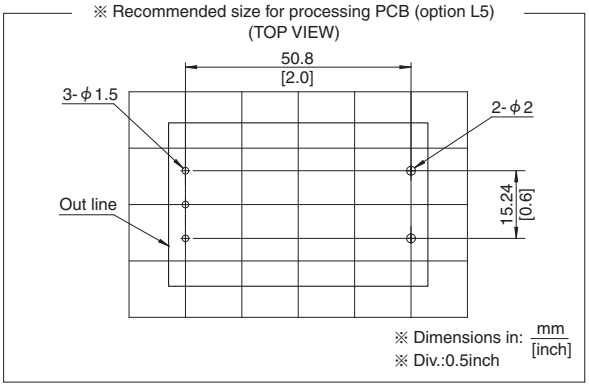

External view

4. 7pins type (option L7)

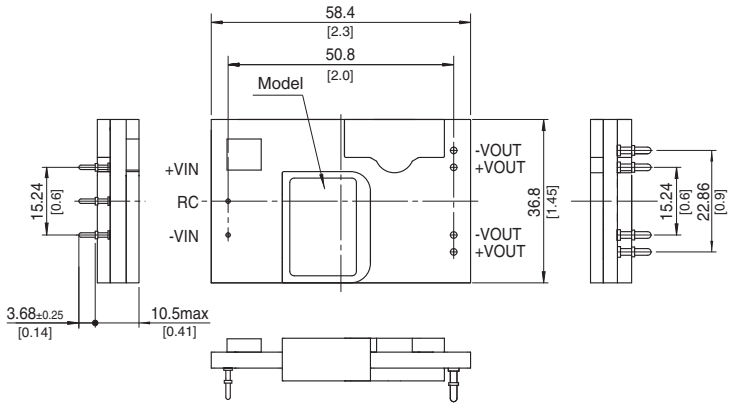

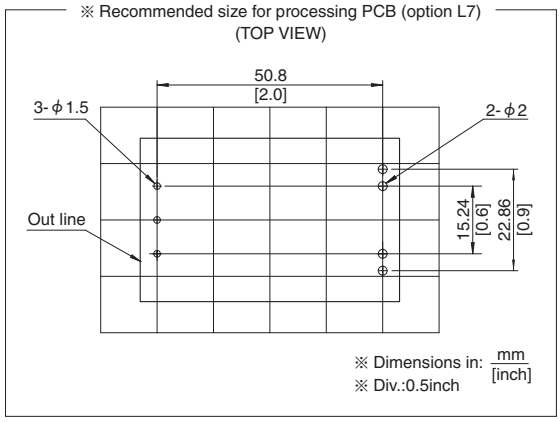

5. 8pins type (option L8)

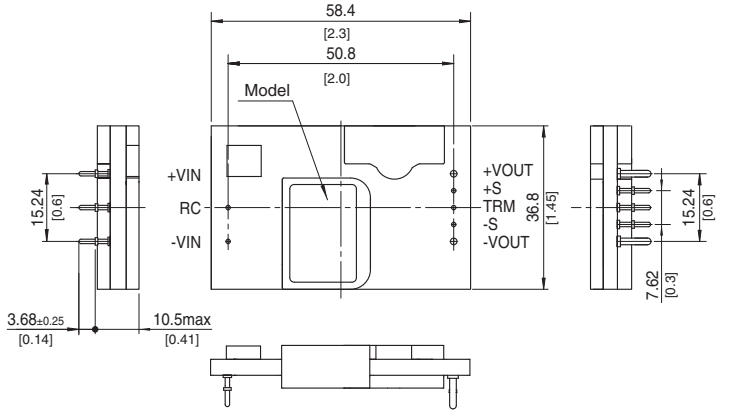

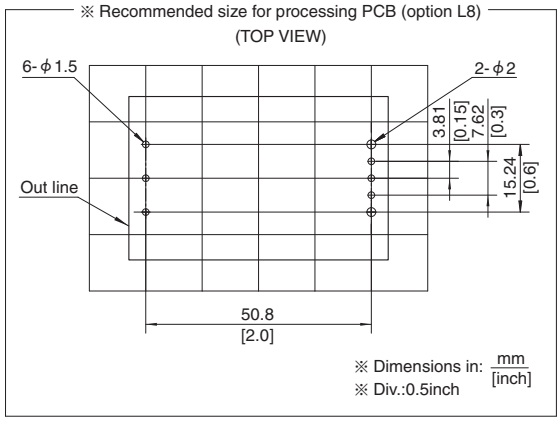

Pin Configuration

●CHS60

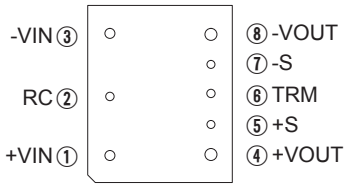

*bottom view

●CHS80

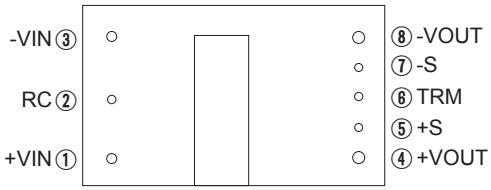

*bottom view

●CHS120

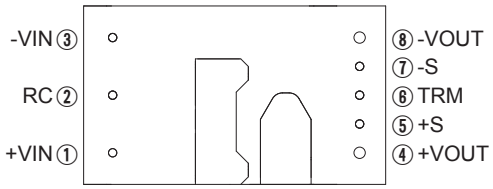

*bottom view

●CHS200

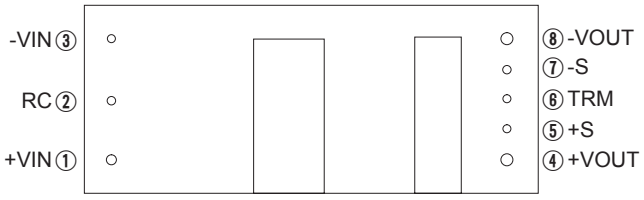

*bottom view

●CHS300

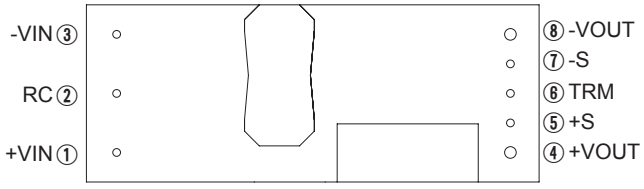

*bottom view

●CHS380

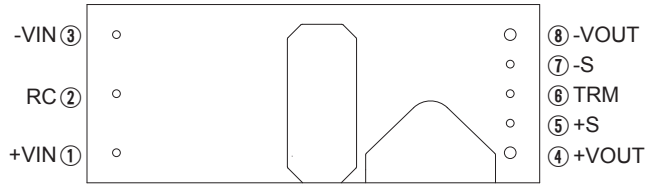

*bottom view

●CHS400/CHS500

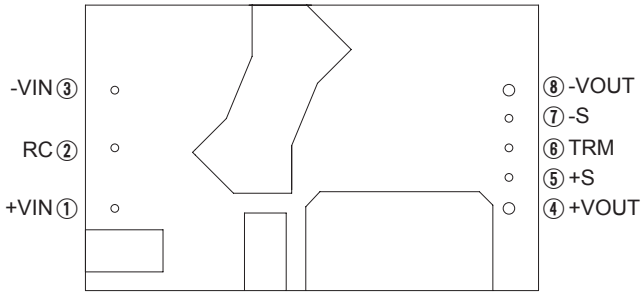

*bottom view

●CHS700

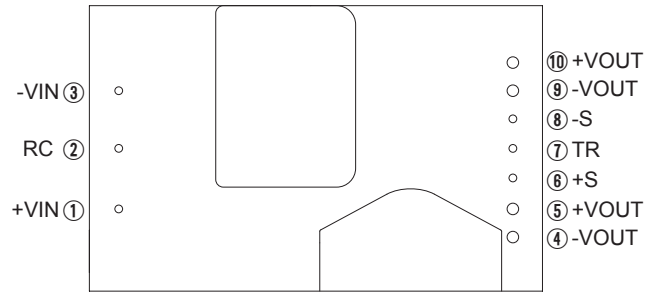

*bottom view

No.		Pin Connection	Function
CHS60, CHS80, CHS120, CHS200, CHS300, CHS380, CHS400, CHS500	CHS700		
①	①	+VIN	+DC input
②	②	RC	Remote ON/OFF
③	③	-VIN	-DC input
④	⑤,⑩	+VOUT	+DC output
⑤	⑥	+S	+Remote sensing
⑥	⑦	TRM	Adjustment of output voltage
⑦	⑧	-S	-Remote sensing
⑧	④,⑨	-VOUT	-DC output

Implementation・Mounting Method

Mounting method

■The unit can be mounted in any direction. When two or more power supplies are used side by side, position them with proper intervals to allow enough air ventilation. The temperature around each power supply should not exceed the temperature range shown in Instraction Maunal 8.

■Avoid placing the DC input line pattern layout underneath the unit.It will increase the line conducted noise. Make sure to leave an ample distance between the line pattern layout and the unit. Also avoid placing the DC output line pattern underneath the unit because it may increase the output noise. Lay out the pattern away from the unit.

■Avoid placing the signal line pattern layout underneath the unit because the power supply might become unstable. Lay out the pattern away from the unit.

■Avoid placing pattern layout in hatched area shown in below to insulate between pattern and power supply.

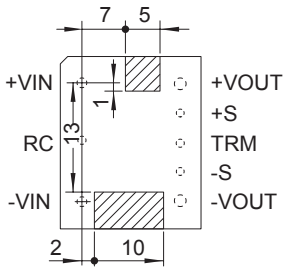

(a) CHS60

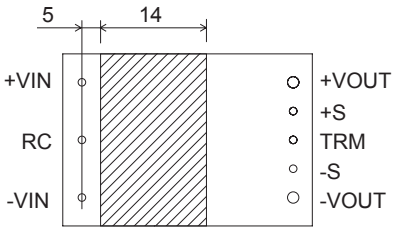

(b) CHS80

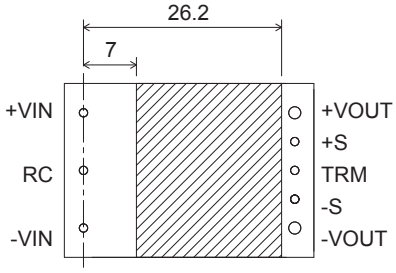

(C) CHS120

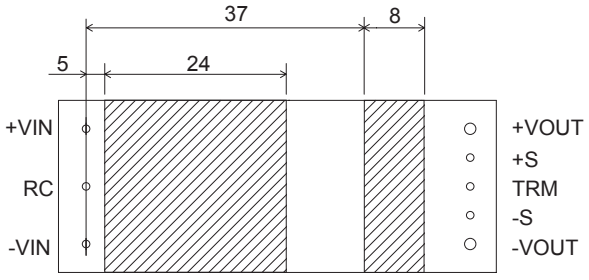

(d) CHS200

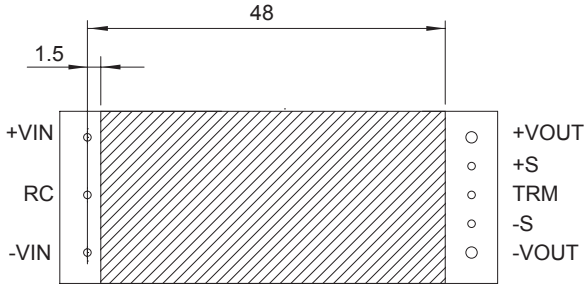

(e) CHS300/CHS380

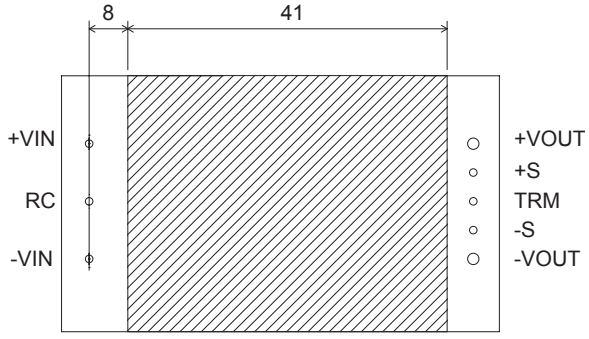

(f) CHS400/CHS500

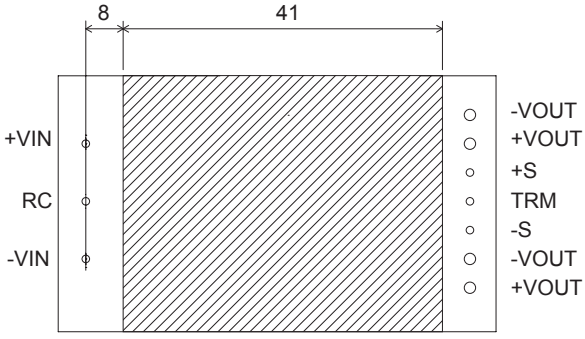

(g) CHS700

Dimensions in mm

Automatic Mounting（CHS series:option S）

■To mount CHS series automatically, use the inductor area near the output pin as an adsorption point. Please see the External View for details of the adsorption point. If the bottom dead point of a suction nozzle is too low when mounting excessive force is applied to the inductor, it could cause damage. Please mount carefully.

Implementation・Mounting Method

Soldering

(1)Flow Soldering : 260℃ 15 seconds or less

(2)Soldering Iron : maximum 450℃ 5 seconds or less

(3)Reflow Soldering (option "-S")

■Right figure shows conditions for the reflow soldering for option "-S" of CHS series. Please make sure that the temperatures of pin terminals +VIN and -VOUT shown in right figure do not exceed the temperatures shown in below.

■If time or temperature of the reflow soldering goes beyond the conditions, reliability of internal components may be compromised.
Please use the unit under the recommended reflow conditions.

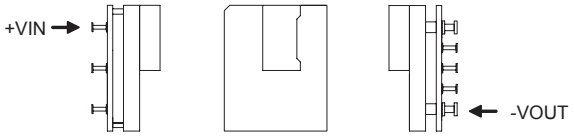

(a) CHS60

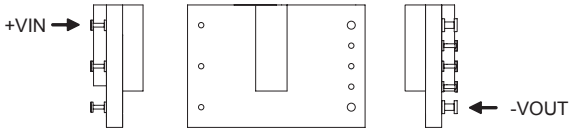

(b) CHS80

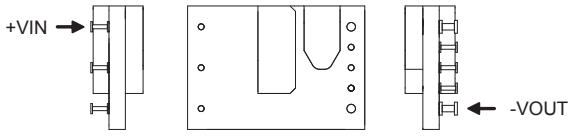

(c) CHS120

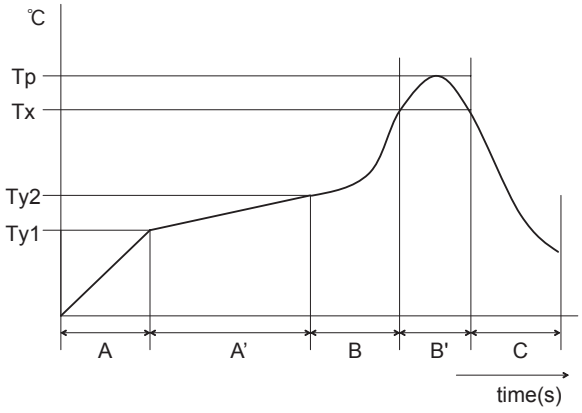

A	1.0 - 5.0℃/s
A'	Ty1:160±10℃ Ty2:180±10℃ Ty1 - Ty2:120s max
B	1.0 - 5.0℃/s
B'	Tp:Max245℃ 10s max Tx:220℃ or more:70s max
C	1.0 - 5.0℃/s

Notes to use option "-S"

■Solder iron or other similar methods are not recommended soldering method for option "-S"because it may not be able to retain connection reliability between the PCB and the Pins. Solder reflow is the acceptable mounting system for the option.

■Option "-S"is not reusable product after soldered on any application PCB.

Stress to the pins

■When too much stress is applied to the pins of the power supply, the internal connection may be weakened.
As shown in right figure, avoid applying stress of more than 19.6N (2kgf) to the pins horizontally and more than 39.2N (4kgf) vertically.

■The pins are soldered on PWB internally. Therefore, do not pull bend them with strong force.

■Fix the unit on PCB (using silicone rubber or fixing fittings) to reduce the stress to the pins.

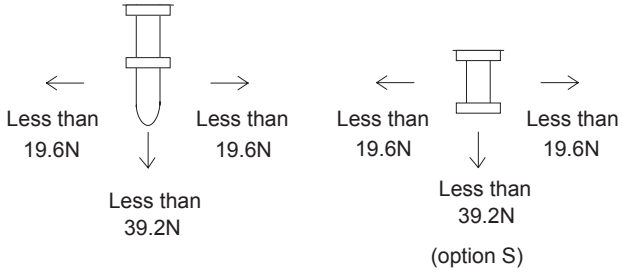

■The base plate at Option"B"and "BC"is attached by glue.
When fixed to cabinet with screw, fix the power module before soldering the input and output pins to prevent the power modulebeing damaged.

Stress to the product

■CHS series transformer core and choke coil core are attached by glue.
There is a possibility that the core will be removed and power supply will be damaged when they receive stress by the fall or somekind of stress.

■The base plate at Option"B"and "BC"is attached by glue.There is a possibility that the base plate will be removed and power supply will be damaged when they receive stress by the fall or some kind of stress.

Derating

Input Derating

●CHS120 Input Derating

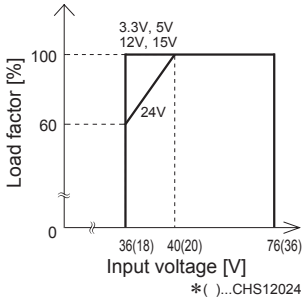

Ambient temperature derating

■Shown the thermal curve with measuring as shown in Instraction Maunal 8 Measuring method. Verify final design by actual temperature measurement. Make sure the temperatures at temperature measurement locations shown from Instraction Maunal 8. It should not exceed the derating curve in Instraction Maunal 8.

●CHS60483R3 Ambient temperature derating (Vin=48V Reference value)

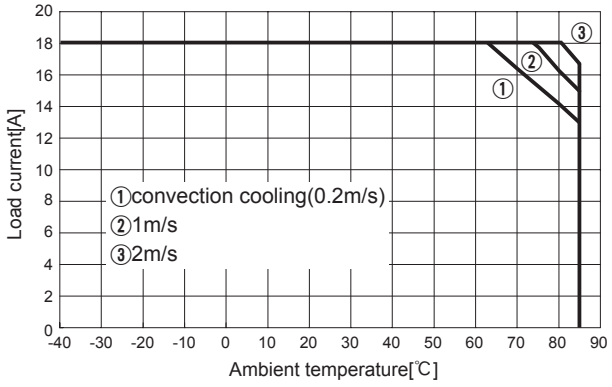

●CHS604805 Ambient temperature derating (Vin=48V Reference value)

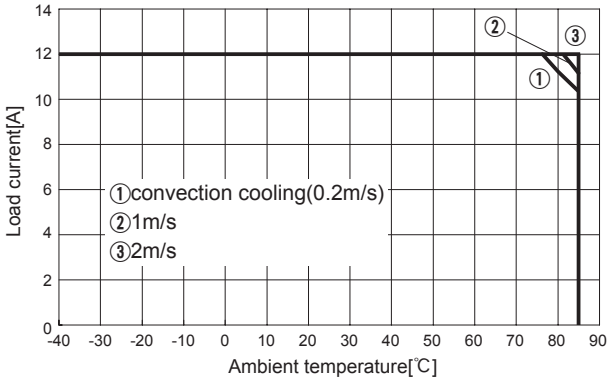

●CHS604812 Ambient temperature derating (Vin=48V Reference value)

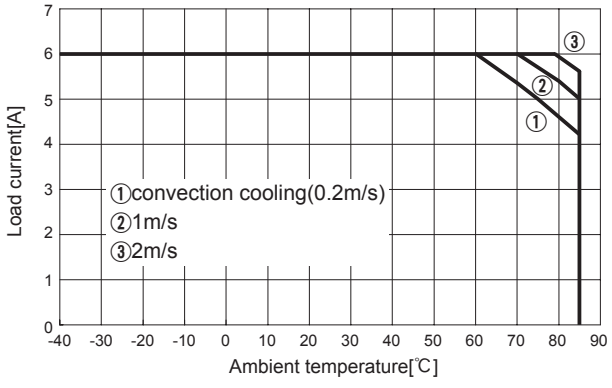

●CHS80483R3 Ambient temperature derating (Vin=48V Reference value)

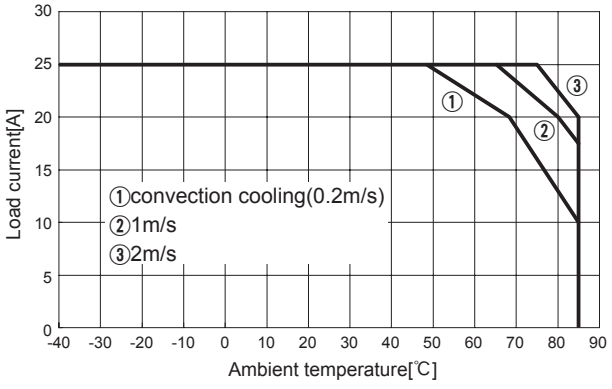

Derating

●CHS804805 Ambient temperature derating (Vin=48V Reference value)

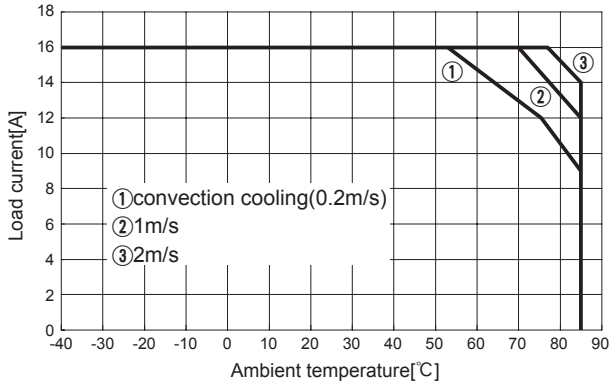

●CHS804812 Ambient temperature derating (Vin=48V Reference value)

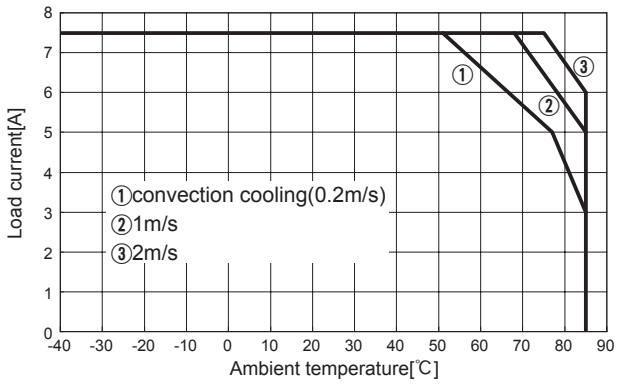

●CHS1202405 Ambient temperature derating (Vin=24V Reference value)

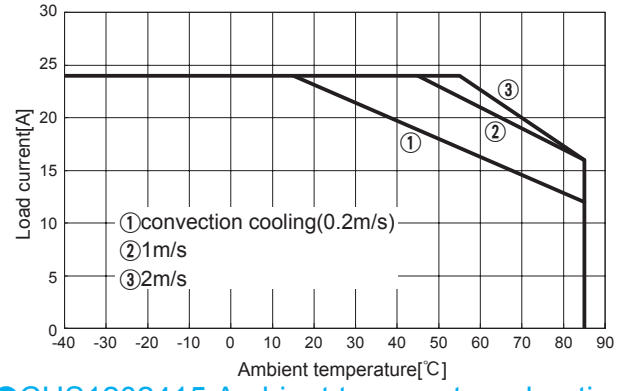

●CHS1202412 Ambient temperature derating (Vin=24V Reference value)

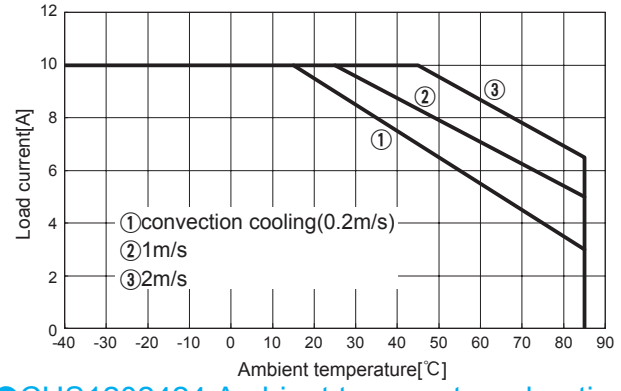

●CHS1202415 Ambient temperature derating (Vin=24V Reference value)

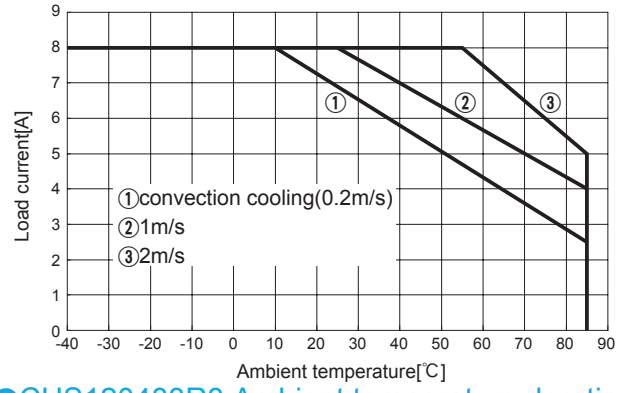

●CHS1202424 Ambient temperature derating (Vin=24V Reference value)

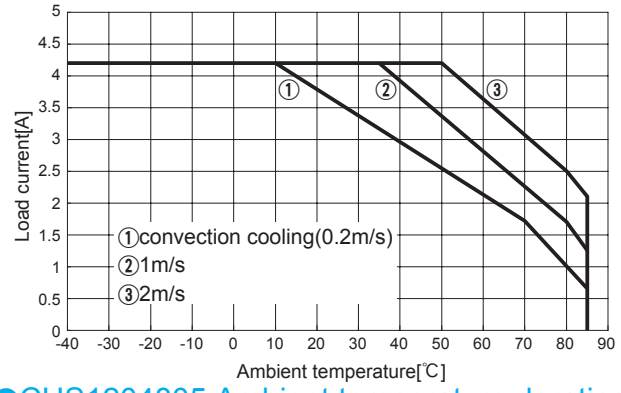

●CHS120483R3 Ambient temperature derating (Vin=48V Reference value)

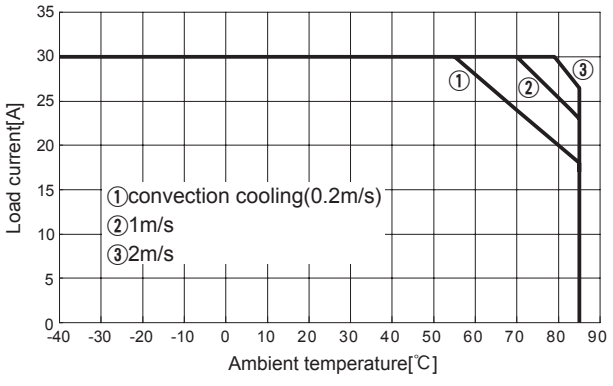

●CHS1204805 Ambient temperature derating (Vin=48V Reference value)

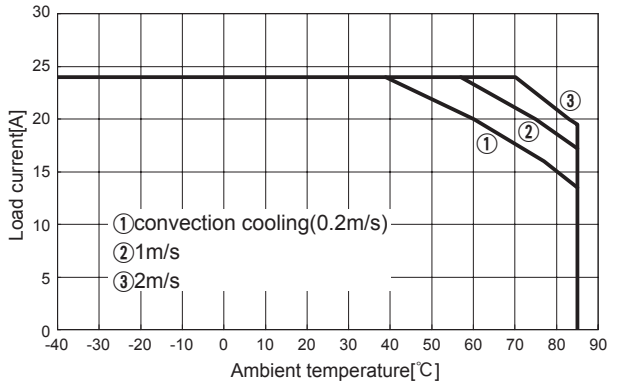

Derating

●CHS1204812 Ambient temperature derating (Vin=48V Reference value)

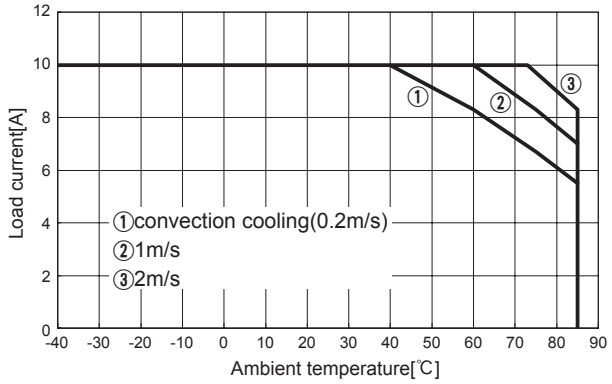

●CHS1204815 Ambient temperature derating (Vin=48V Reference value)

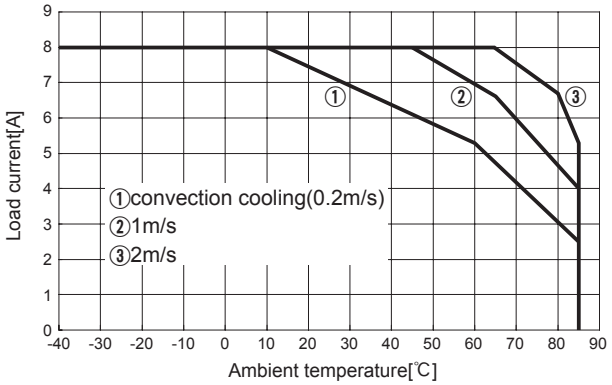

●CHS1204824 Ambient temperature derating (Vin=48V Reference value)

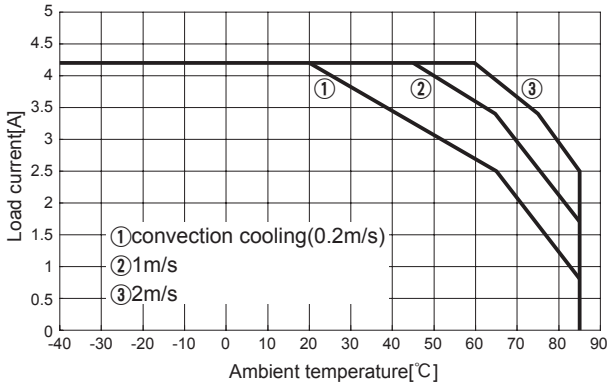

●CHS200483R3 Ambient temperature derating (Vin=48V Reference value)

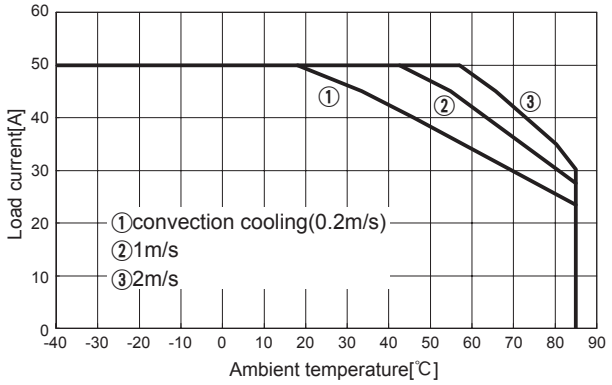

●CHS2004805 Ambient temperature derating (Vin=48V Reference value)

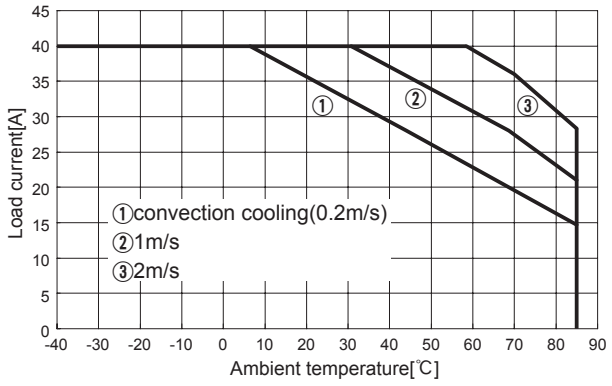

●CHS2004812 Ambient temperature derating (Vin=48V Reference value)

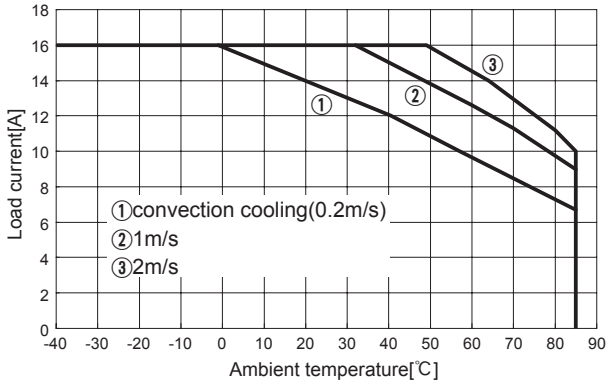

●CHS3002405 Ambient temperature derating (Vin=24V Reference value)

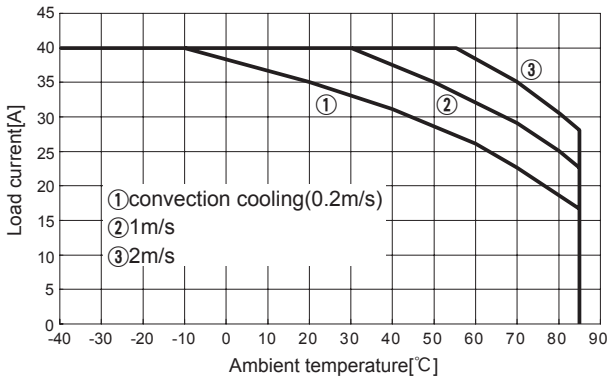

●CHS3002412 Ambient temperature derating (Vin=24V Reference value)

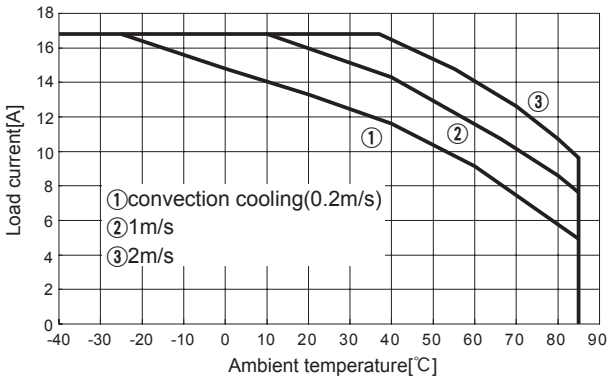

Derating

●CHS3002415 Ambient temperature derating (Vin=24V Reference value)

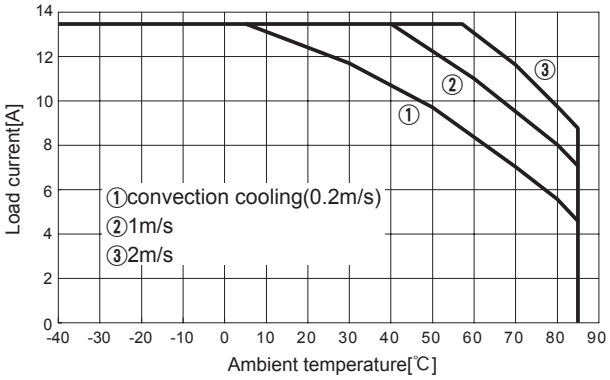

●CHS3002424 Ambient temperature derating (Vin=24V Reference value)

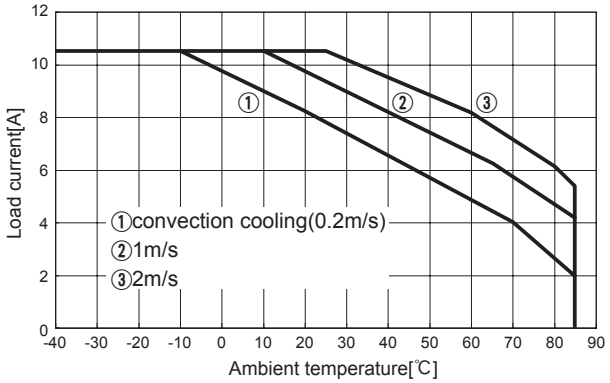

●CHS3002428 Ambient temperature derating (Vin=24V Reference value)

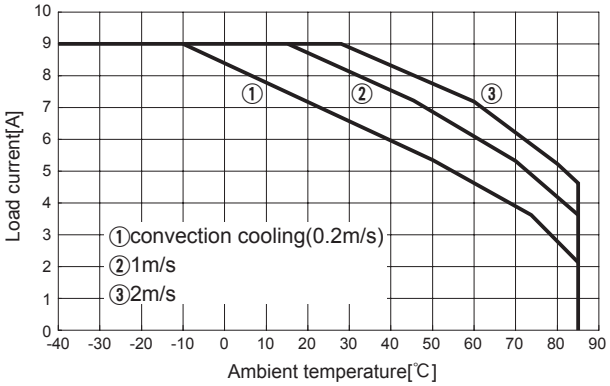

●CHS3002432Ambient temperature derating (Vin=24V Reference value)

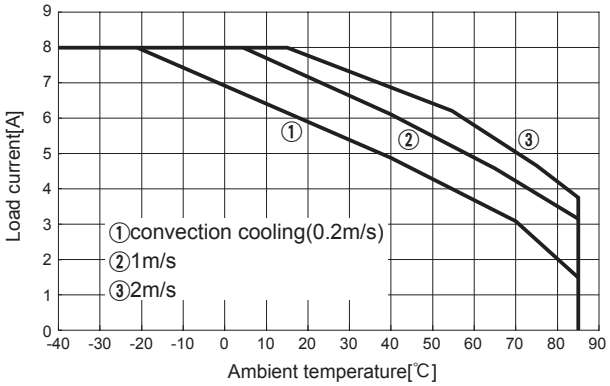

●CHS3002448Ambient temperature derating (Vin=24V Reference value)

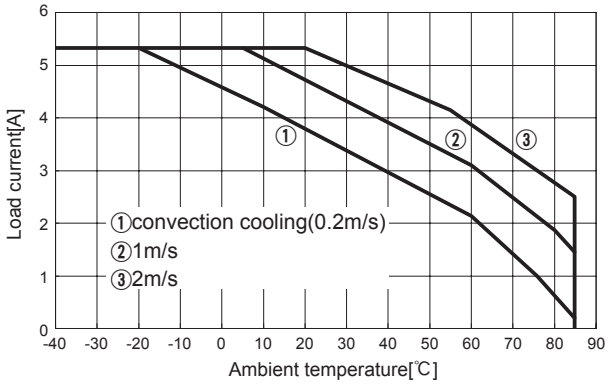

●CHS3004810 Ambient temperature derating (Vin=48V Reference value)

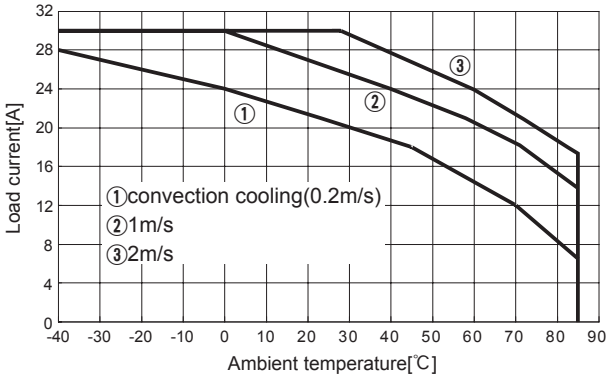

●CHS3004812 Ambient temperature derating (Vin=48V Reference value)

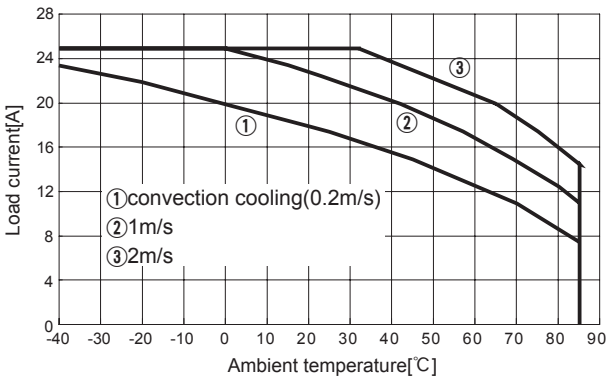

●CHS3004812H Ambient temperature derating (Vin=48V Reference value)

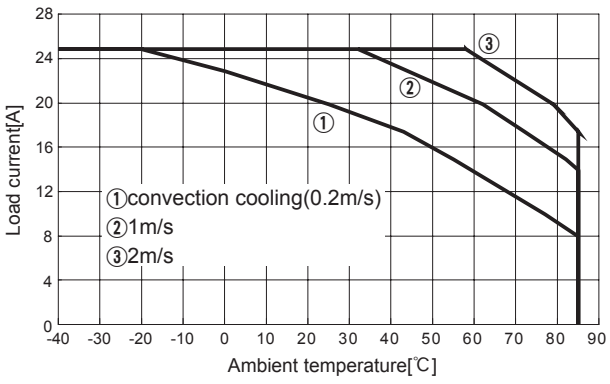

Derating

●CHS3004815 Ambient temperature derating (Vin=48V Reference value)

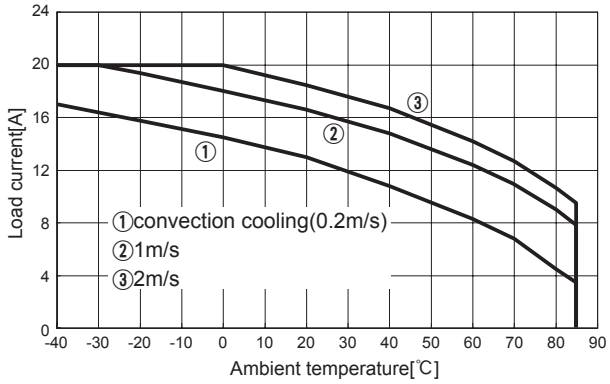

●CHS3004824 Ambient temperature derating (Vin=48V Reference value)

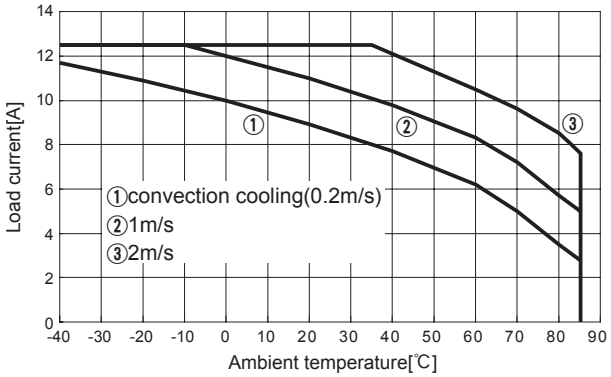

●CHS3004828 Ambient temperature derating (Vin=48V Reference value)

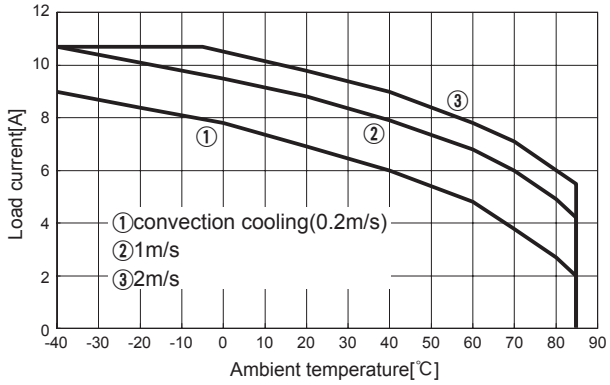

●CHS3004832 Ambient temperature derating (Vin=48V Reference value)

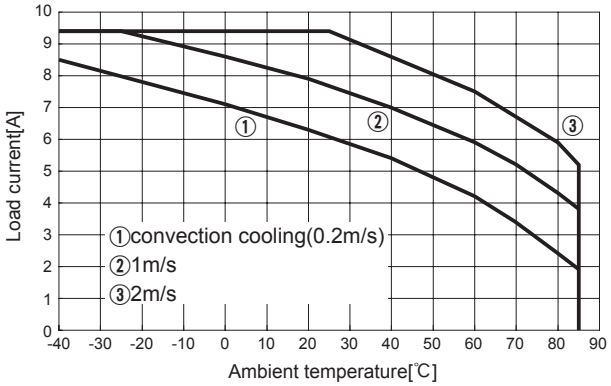

●CHS3004848 Ambient temperature derating (Vin=48V Reference value)

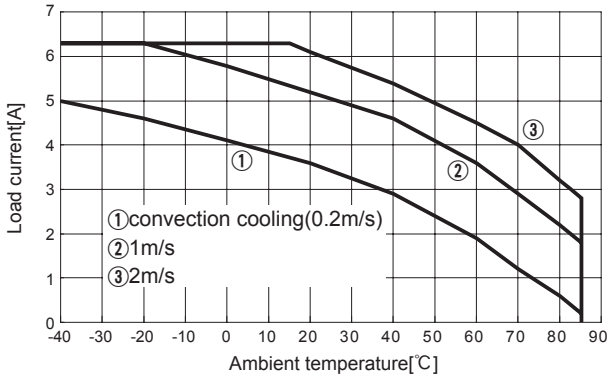

●CHS3804810 Ambient temperature derating (Vin=48V Reference value)

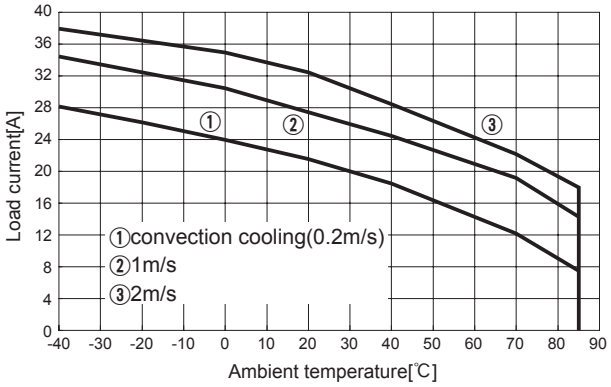

●CHS3804812 Ambient temperature derating (Vin=48V Reference value)

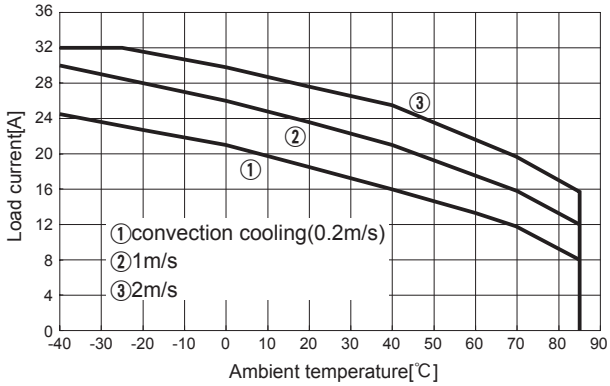

●CHS3804812H Ambient temperature derating (Vin=48V Reference value)

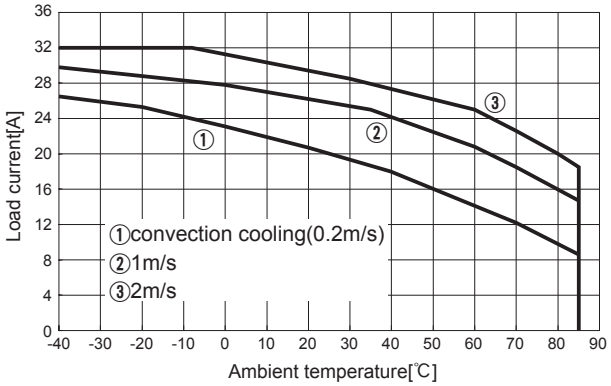

Derating

●CHS4002412 Ambient temperature derating (Vin=24V Reference value)

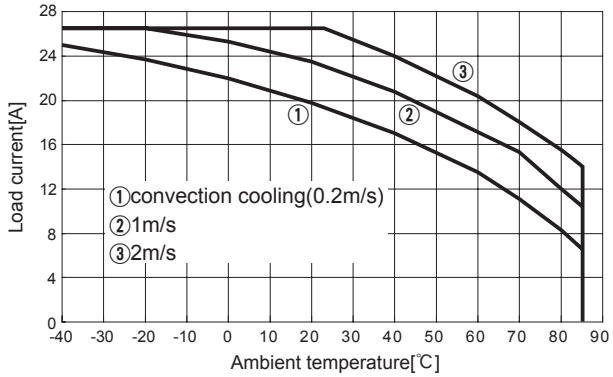

●CHS4002415 Ambient temperature derating (Vin=24V Reference value)

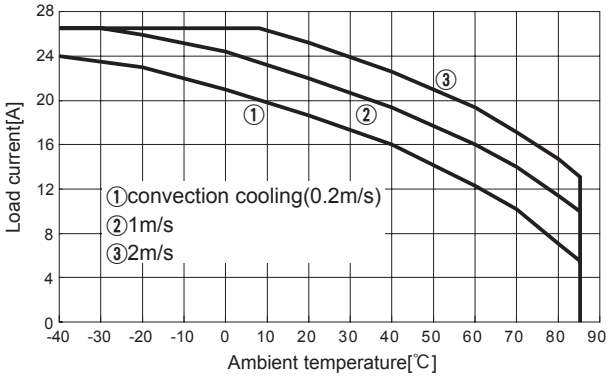

●CHS4002424 Ambient temperature derating (Vin=24V Reference value)

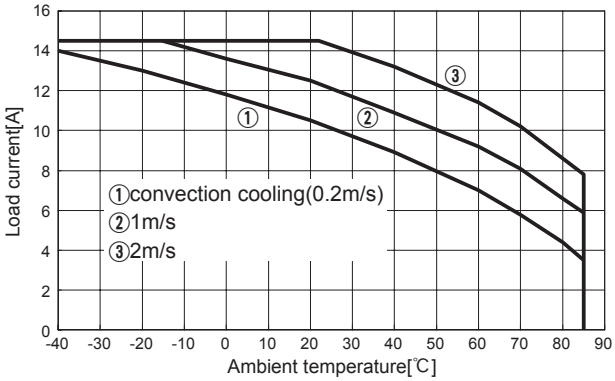

●CHS4002428 Ambient temperature derating (Vin=24V Reference value)

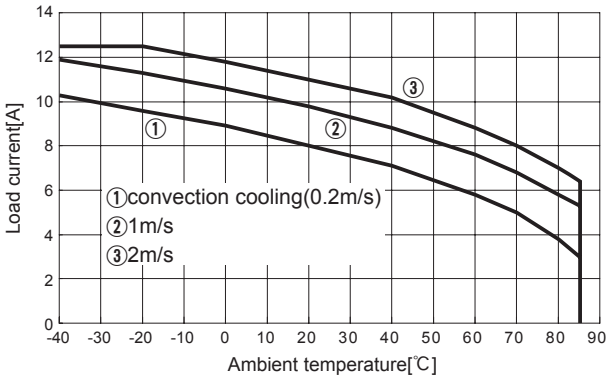

●CHS4002432 Ambient temperature derating (Vin=24V Reference value)

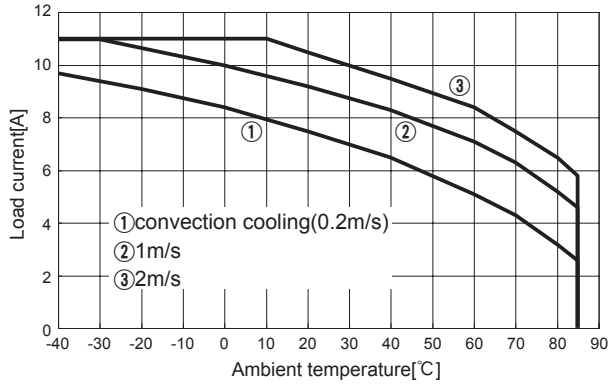

●CHS4002448 Ambient temperature derating (Vin=24V Reference value)

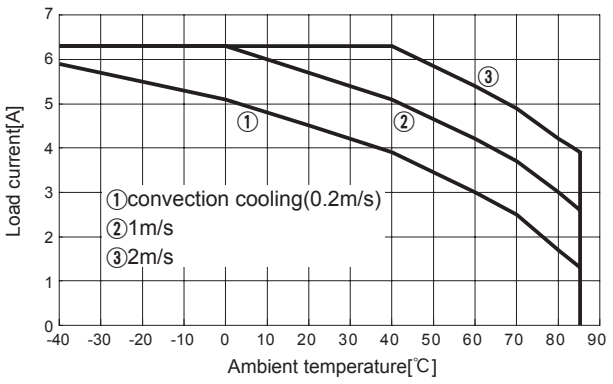

●CHS4004810 Ambient temperature derating (Vin=48V Reference value)

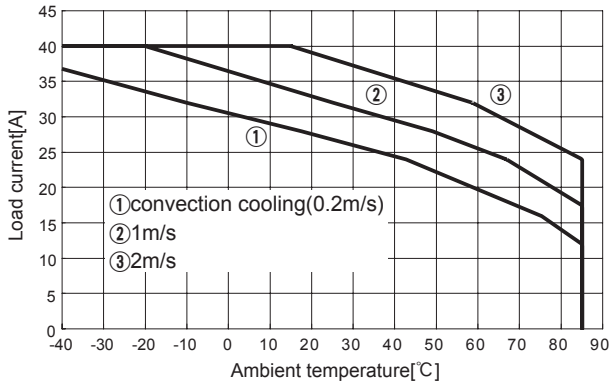

●CHS4004812 Ambient temperature derating (Vin=48V Reference value)

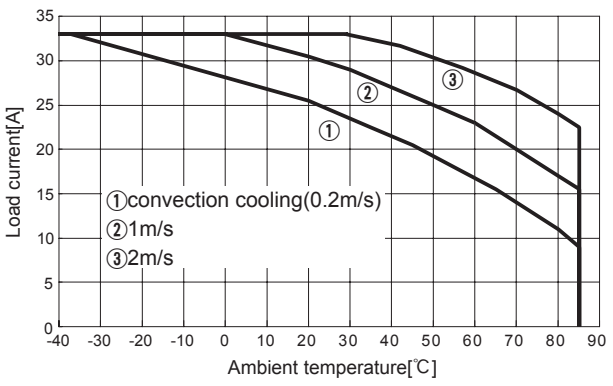

Derating

●CHS4004812H Ambient temperature derating (Vin=48V Reference value)

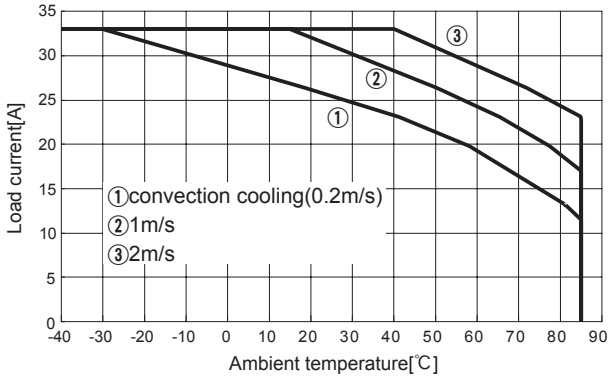

●CHS4004815 Ambient temperature derating (Vin=48V Reference value)

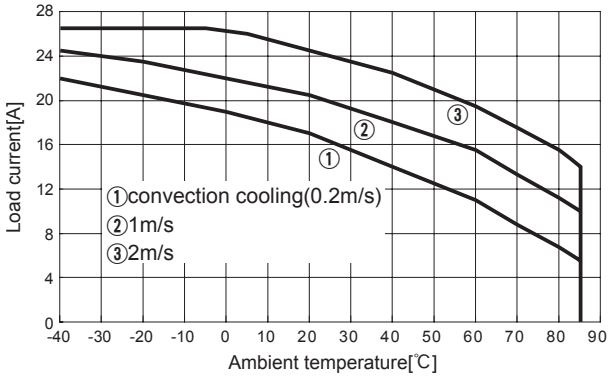

●CHS4004824 Ambient temperature derating (Vin=48V Reference value)

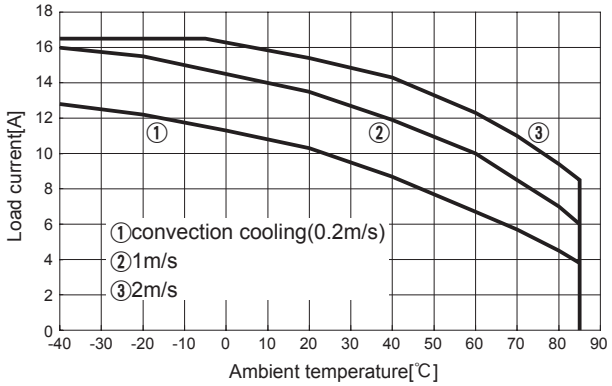

●CHS4004828 Ambient temperature derating (Vin=48V Reference value)

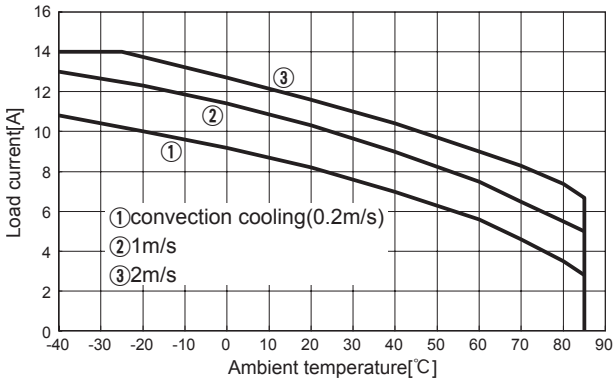

●CHS4004832 Ambient temperature derating (Vin=48V Reference value)

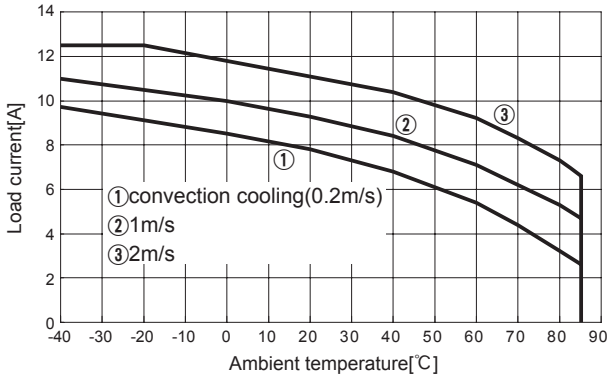

●CHS4004848 Ambient temperature derating (Vin=48V Reference value)

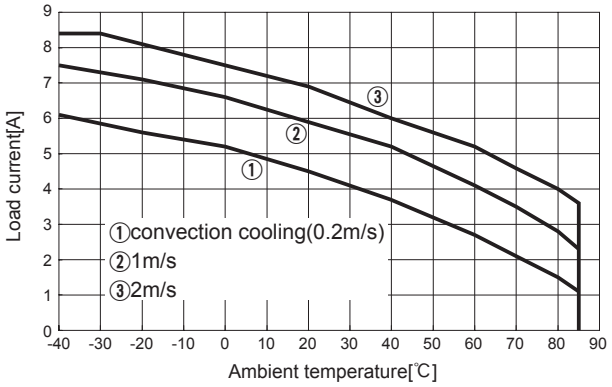

●CHS5004812 Ambient temperature derating (Vin=48V Reference value)

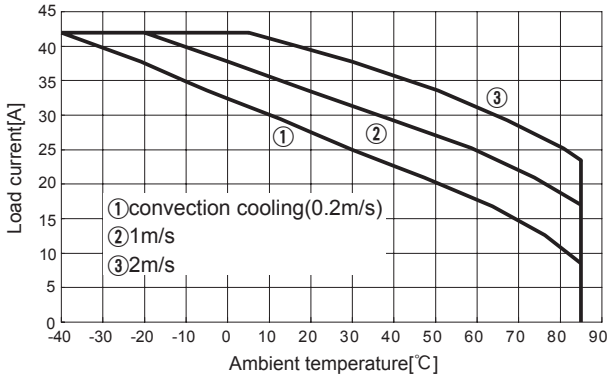

●CHS7004812H Ambient temperature derating (Vin=48V Reference value)

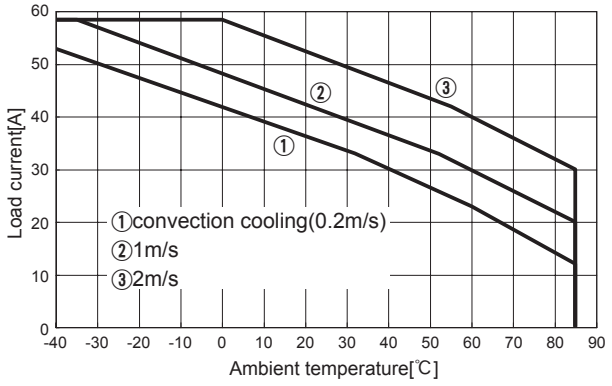

Instruction Manuals

◆ Please see catalog and instructionmanual before you use.

Instruction Manuals https://www.cosel.co.jp/redirect/catalog/en/CHS/
Before using our product https://en.cosel.co.jp/technical/caution/index.html

CHS NOTICE

Basic Characteristics Data

Model	Circuit method	Switching frequency [kHz]	Input current	Rated input fuse	Inrush current protection	PCB/Pattern			Series/Redundancy operation availability	
						Material	Single sided	Double sided	Series operation	Redundancy operation
CHS60	Foward converter	440	✻1	-	-	glass fabric base, epoxy resin		Multilayer	Yes	✻2
CHS80	Half-bridge converter	250	✻1	-	-	glass fabric base, epoxy resin		Multilayer	Yes	✻2
CHS12024	Half-bridge converter	180	✻1	-	-	glass fabric base, epoxy resin		Multilayer	Yes	✻2
CHS12048	Half-bridge converter	200	✻1	-	-	glass fabric base, epoxy resin		Multilayer	Yes	✻2
CHS200	Full-bridge converter	150	✻1	-	-	glass fabric base, epoxy resin		Multilayer	Yes	✻2
CHS30024 (05,12,15)	Full-bridge converter	170	✻1	-	-	glass fabric base, epoxy resin		Multilayer	Yes	✻2
CHS30024 (24,28,32,48)	Full-bridge converter	170	✻1	-	-	glass fabric base, epoxy resin		Multilayer	Yes	✻2
CHS30048 (10,12,12H)	Full-bridge converter	170	✻1	-	-	glass fabric base, epoxy resin		Multilayer	Yes	✻2
CHS30048 (15,24,28,32,48)	Full-bridge converter	170	✻1	-	-	glass fabric base, epoxy resin		Multilayer	Yes	✻2
CHS380 (4810,4812)	Full-bridge converter	200	✻1	-	-	glass fabric base, epoxy resin		Multilayer	Yes	✻2
CHS380 (4812H)	Full-bridge converter	180	✻1	-	-	glass fabric base, epoxy resin		Multilayer	Yes	✻2
CHS40024	Full-bridge converter	150	✻1	-	-	glass fabric base, epoxy resin		Multilayer	Yes	✻2
CHS40048 (10,12,12H)	Full-bridge converter	150	✻1	-	-	glass fabric base, epoxy resin		Multilayer	Yes	✻2
CHS40048 (15,24,28,32,48)	Full-bridge converter	150	✻1	-	-	glass fabric base, epoxy resin		Multilayer	Yes	✻2
CHS500	Full-bridge converter	150	✻1	-	-	glass fabric base, epoxy resin		Multilayer	Yes	✻2
CHS700	Full-bridge converter	160	✻1	-	-	glass fabric base, epoxy resin		Multilayer	Yes	✻2

✻1 Refer to Specification.
✻2 Refer to Instruction Manual.