1U | Power Factor Correction | Safety Approvals | EMI | Inrush current limiting | OCP | OVP | Remote ON/OFF | Parallel Operation | Worldwide

HFA-series

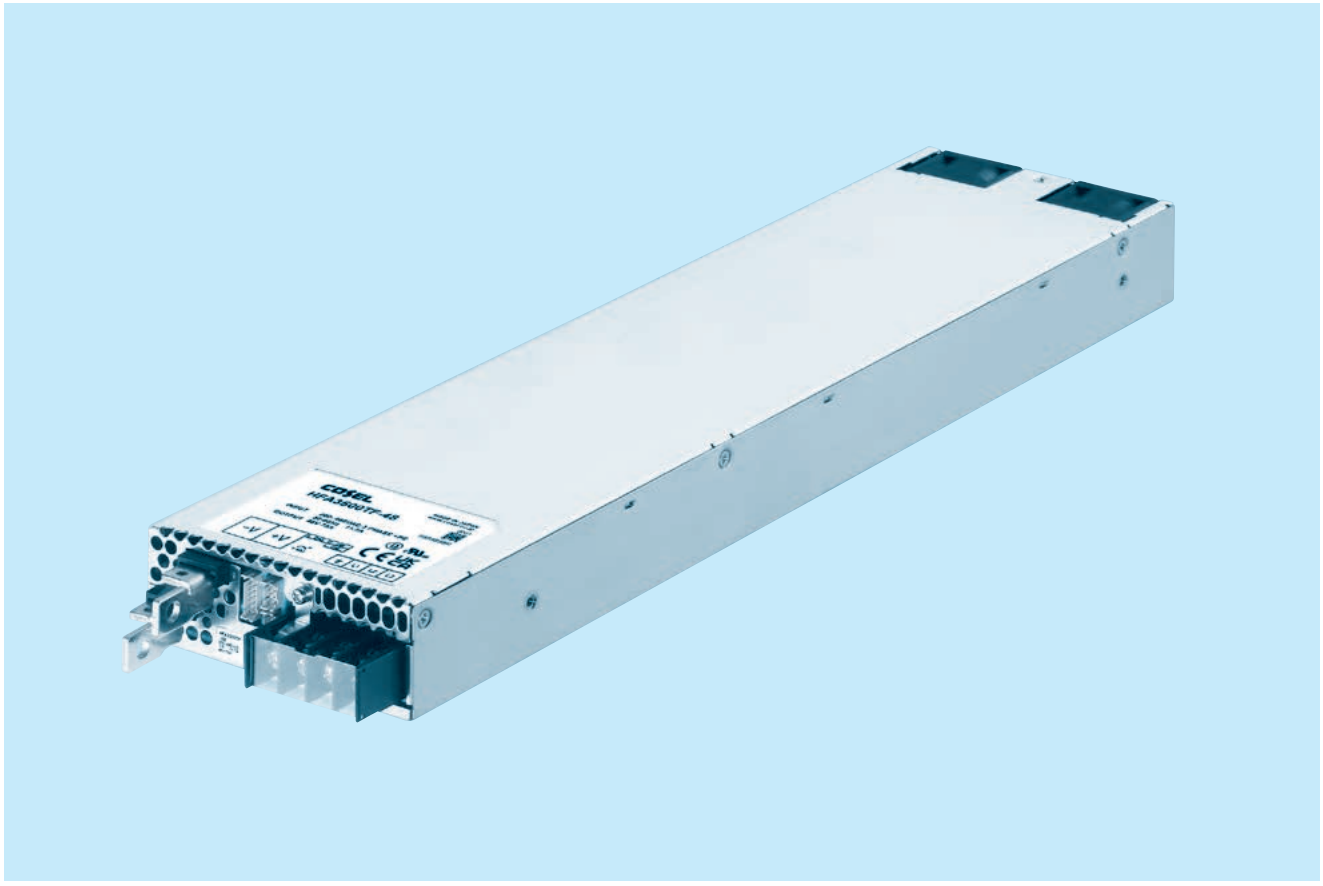

Feature

Low profile (41mm, 1.61 inch = Meet 1U height)
Wide input voltage range : 3φ 180 · 528VAC
Built-in AUX power 12V 1A
Complies with SEMI F47
Parallel Operation / N+1 Parallel Redundancy Operation
High efficiency 94% (at 400VAC input and 65V output)
Built-in Alarms
Built-in ORING MOSFET

Safety agency approvals

UL62368-1, C-UL (CSA62368-1), EN62368-1

5-year warranty (Refer to Instruction Manual)

CE marking

Low voltage Directive
RoHS Directive

UKCA marking

Electrical Equipment Safety Regulations
RoHS Regulations

EMI

Complies with FCC Part 15-A, FCC Part18-A, CISPR11-A, CISPR32-A, EN55011-A, EN55032-A, VCCI-A

EMS Compliance : EN61204-3, EN61000-6-2

EN61000-4-2
EN61000-4-3
EN61000-4-4
EN61000-4-5
EN61000-4-6
EN61000-4-8
EN61000-4-11

COSEL AC-DC Power Supplies Enclosed Type

HFA3500TF

Ordering information

HF ① A ② 3500 ③ TF ④ -□□ ⑤ -□ ⑥

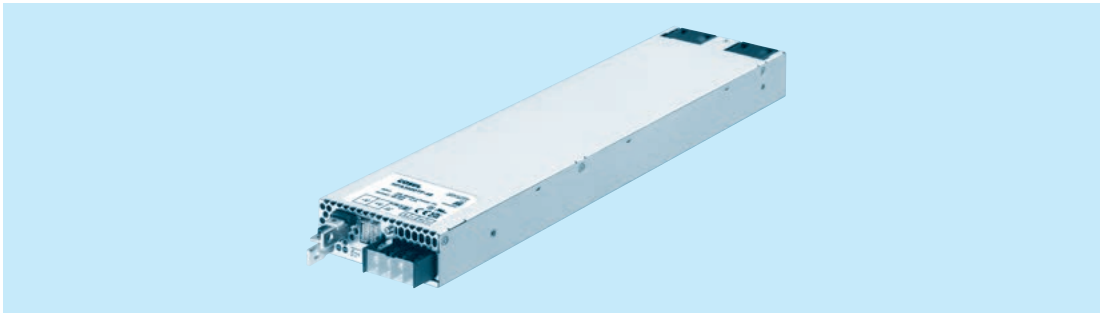

①Series name
②Single output
③Output wattage
④3 phase full range input
⑤Output voltage
⑥Optional
R : with Remote ON/OFF Positive logic control
G : Low leakage current
I4 : with MODBUS interface

MODEL	HFA3500TF-48	HFA3500TF-65
MAX OUTPUT WATTAGE[W]	3504	3510
DC OUTPUT	48V 73A	65V 54A

SPECIFICATIONS

	MODEL		HFA3500TF-48	HFA3500TF-65
INPUT	VOLTAGE[VAC] *1		180 - 528 3φ3-wire (Available to 3φ 4-wire as well (without N phase))	
	CURRENT[A]	ACIN 200V	11.7typ	
		ACIN 400V	5.9typ	
	FREQUENCY[Hz]		50 / 60 (45 - 66)	
	EFFICIENCY[%]	ACIN 200V (Io=100%)	91typ	92typ
		ACIN 400V (Io=100%)	93typ	94typ
	POWER FACTOR	ACIN 200V (Io=100%)	0.95typ	
		ACIN 400V (Io=100%)	0.94typ	
	INRUSH CURRENT[A]	ACIN 200V *2	20 / 30 typ (Io=100%) (Primary / Secondary inrush current)(At cold start) (Ta=25℃)	
		ACIN 400V *2	40 / 30 typ (Io=100%) (Primary / Secondary inrush current)(At cold start) (Ta=25℃)	
	LEAKAGE CURRENT[mA]		3 max (ACIN 480V 60Hz, Io=100%, Complies with IEC62368-1)	
OUTPUT	VOLTAGE[V]		48	65
	CURRENT[A]		73	54
	LINE REGULATION[mV]		192max	260max
	LOAD REGULATION[mV]		300max	450max
	RIPPLE[mVp-p]	0 to +70℃ *3	360max	480max
		-10 to 0℃ *3	480max	650max
	RIPPLE NOISE[mVp-p]	0 to +70℃ *3	600max	790max
		-10 to 0℃ *3	720max	950max
	TEMPERATURE REGULATION[mV]	0 to +50℃	390max	530max
		-10 to +0℃	480max	650max
	START-UP TIME[ms]		400 typ (ACIN 200/400V, Io=100%)	
	HOLD-UP TIME[ms]		20 typ (ACIN 200V, Io=55%) / 10 typ (ACIN 200V, Io=100%)	
	OUTPUT VOLTAGE ADJUSTMENT RANGE[V]		24.00 to 55.20	32.50 to 74.75
	OUTPUT VOLTAGE SETTING[V]		48.00 to 48.48	65.00 to 65.65
PROTECTION CIRCUIT AND OTHERS	OVERCURRENT PROTECTION		Works over 105% of rating (Recovers automatically, Hiccup overcurrent)	
	OVERVOLTAGE PROTECTION[V]		57.60 to 67.20	78.00 to 91.00
	REMOTE SENSING		Provided	
	REMOTE ON/OFF		Provided	
	DC_OK LAMP		LED (Blue)	
	ALARM LAMP		LED (Amber)	
ISOLATION	Input - Output,CN1, CN2, CN3		4,243VAC 1minute, Cutoff current = 20mA, 500VDC 50MΩ min (At room temperature)	
	Input - FG		2,829VAC 1minute, Cutoff current = 20mA, 500VDC 50MΩ min (At room temperature)	
	Output, CN1, CN2 - FG		2,000VAC 1minute, Cutoff current = 10mA, 500VDC 50MΩ min (At room temperature)	
	Output, CN1, CN2 - CN3		500VAC 1minute, Cutoff current = 10mA, 500VDC 50MΩ min (At room temperature)	
	CN3 - FG		500VAC 1minute, Cutoff current = 10mA, 500VDC 50MΩ min (At room temperature)	
ENVIRONMENT	OPERATING TEMP.,HUMID.AND ALTITUDE		-10 to +70℃ (Refer to "Derating"), 20 - 90%RH (Non condensing), 3,000m (10,000 feet) max	
	STORAGE TEMP.,HUMID.AND ALTITUDE		-20 to +75℃, 20 - 90%RH (Non condensing), 9,000m (30,000 feet) max	
	VIBRATION		10 - 55Hz, 19.6m/s² (2G), 3minutes period, 60minutes each along X, Y and Z axis	
	IMPACT		196.1m/s² (20G), 11ms, once each along X, Y and Z axis	
SAFETY AND NOISE REGULATIONS	AGENCY APPROVALS		UL62368-1, EN62368-1, C-UL (equivalent to CAN/CSA-C22.2 No.62368-1)	
	CONDUCTED NOISE		Complies with FCC Part 15-A, FCC Part18-A, CISPR11-A, CISPR32-A, EN55011-A, EN55032-A, VCCI-A	
OTHERS	CASE SIZE/WEIGHT		110×41×468mm [4.33×1.61×18.43 inches] (without terminal block and screw) (W×H×D) / 3kg max	
	COOLING METHOD		Forced cooling (internal fan)	

*1 Output derating is required at 180 - 200VAC. Refer to "Derating".
*2 The value is primary surge. The current of input surge to a built-in EMI/EMS Filter (0.2ms or less) is excluded. More than 3 sec. to re-start.
*3 Measured by 20MHz oscilloscope or Ripple-Noise meter (equivalent to KEISOKUGIKEN : RM104). Please refer to the instruction manual 1.7.
* Sound noise may be generated by power supply in case of pulse load.

Features

- Low profile (41mm, 1.61 inch = Meet 1U height)
- Wide input voltage range : 3φ 180 — 528VAC
- Built-in AUX power 12V 1A
- Complies with SEMI F47
- Parallel Operation / N+1 Parallel Redundancy Operation
- High efficiency 94% (at 400VAC input and 65V output)
- Built-in Alarms
- Built-in ORING MOSFET

Block diagram

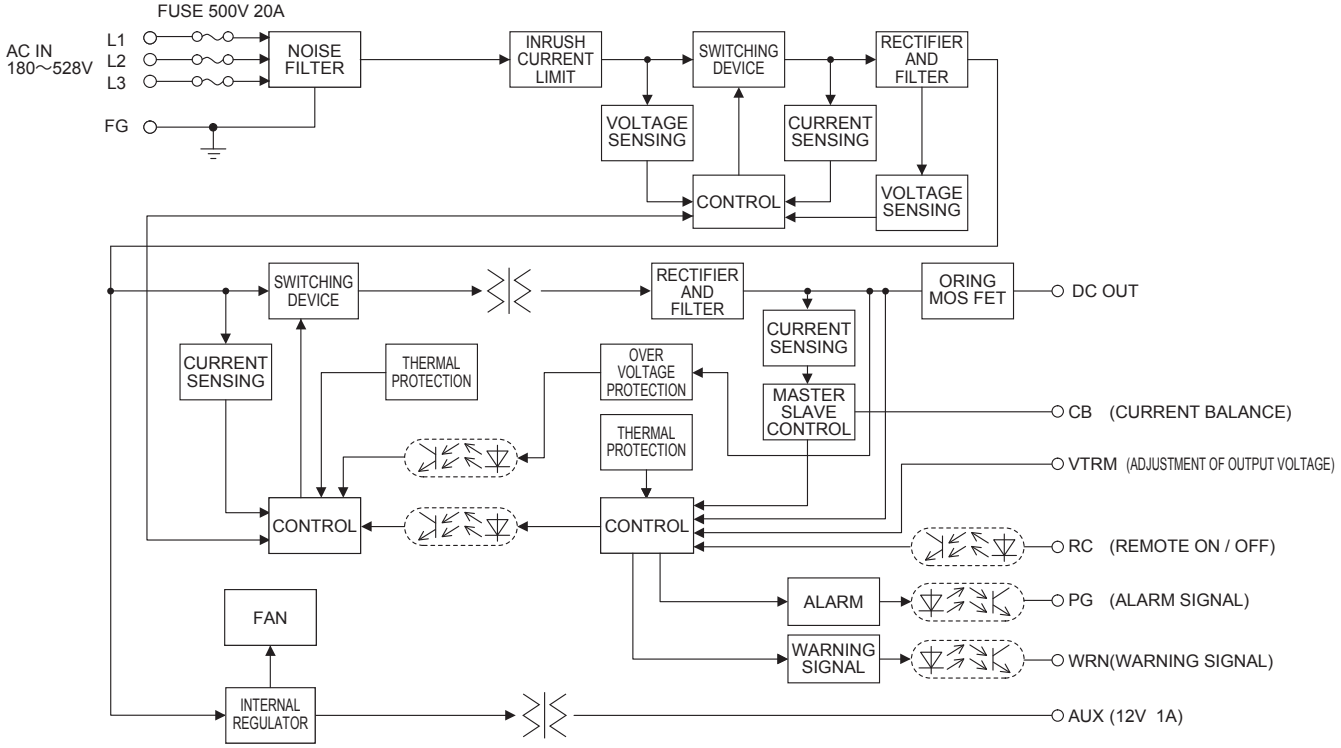

External view

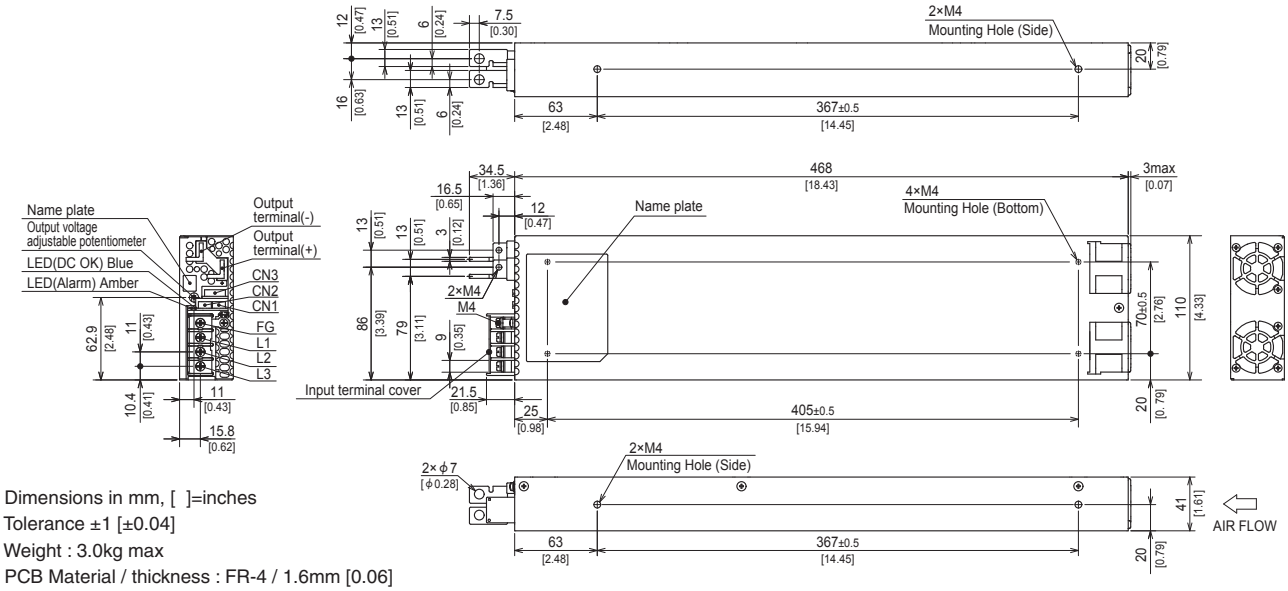

* Dimensions in mm, [ ]=inches
* Tolerance ±1 [±0.04]
* Weight : 3.0kg max
* PCB Material / thickness : FR-4 / 1.6mm [0.06]
* Chassis Material : Stainless
* Maunting torque : M4 1.2N-m max
* Input and output terminal screw tightening torque: M4 1.6N-m max
* Please connect safty ground to FG terminal on the unit.

Terminal Blocks

● HFA3500TF

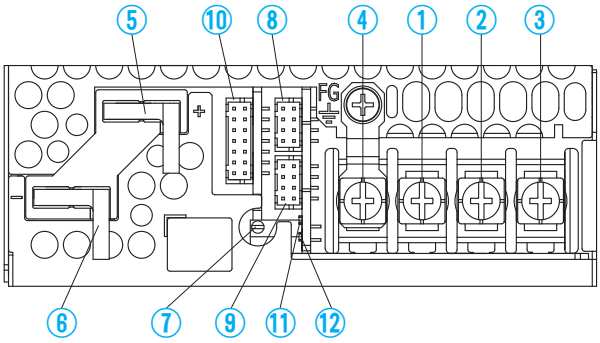

①AC（L1）
②AC（L2）} Input Terminals 180－528VAC 3 ϕ 45－66Hz
③AC（L3）} (M4)
④Frame ground (M4 ⏚)
⑤＋Output
⑥－Output
⑦Output voltage adjustable potentiometer
⑧CN1
⑨CN2 } Connectors
⑩CN3
⑪LED for output voltage confirmation (DC_OK) Color : Bule
⑫LED for fault condition detection (ALARM) Color : Amber

● Pin Configuration and Functions

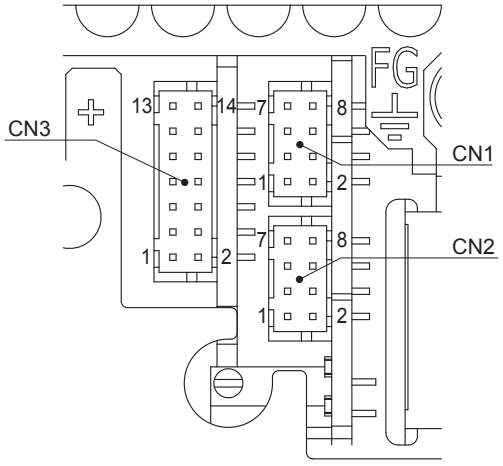

Pin Configuration and Functions of CN1, CN2

Pin No.	Function			Ground level
1	+S	:	+Remote sensing	COM
2,3	N.C.	:	No connection	-
4	-S	:	-Remote sensing	COM
5	CB	:	Current Balance	COM
6	N.C.	:	No connection	-
7	VTRM	:	Adjustment of output voltage	COM
8	COM	:	Common ground (for signal)	COM

＊Each terminal of CN1 and CN2 are connected inside the power supply.
＊Do not connect anything to N.C. pins.

Pin Configuration and Functions of CN3

Pin No.	Function			Ground level
1	AUXG	:	Auxiliary output ground (Same potential as SGND)	AUXG
2	SGND	:	Signal ground (Same potential as AUXG)	SGND
3	AUX	:	Auxiliary output	AUXG
4	B	:	RS485 differential signal (-, Inverted) ＊1	SGND
5	A	:	RS485 differential signal (+, Non-Inverting) ＊1	SGND
6	ADDR1	:	Address bit 1 ＊1	SGND
7	SLV_EN	:	Enable Slave mode	SGND
8	ADDR0	:	Address bit 0 ＊1	SGND
9	RC	:	Remote ON/OFF	RCG
10	RCG	:	Remote ON/OFF ground	RCG
11	WRN	:	Warning signal	WRNG
12	WRNG	:	Warning signal ground	WRNG
13	PG	:	Alarm signal	PGG
14	PGG	:	Alarm signal ground	PGG

＊1 For -I4 option.

Mating connector and terminal

Connector		Housing	Terminal	Mfr.
CN1	S8B-PHDSS	PHDR-8VS	Reel : SPHD-001T-P0.5 SPHD-002T-P0.5	J.S.T.
CN2			Loose : BPHD-001T-P0.5 ＊ BPHD-002T-P0.5 ＊	
CN3	S14B-PHDSS	PHDR-14VS		

＊The manufacturer prepares only the ratchet hand.

Assembling and Installation Method

Installation Method

■Screw mounting requires considering the product weight for safety fixtures.

■To keep enough insulation distance between screws and internal components, length of the mounting screw should not exceed recommendation as shown in right figure.

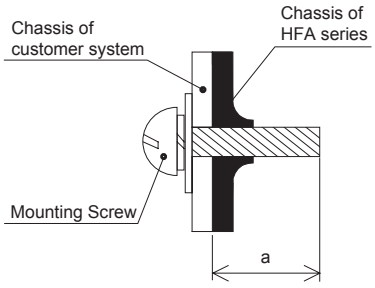

Mounting hole	a (Max penetration length)
Bottom	6mm max
Side	4.5mm max

■When mounting the power supply with screws, it is recommended that this be done as shown below.
If other methods are used, be sure the weight of the power supply is taken into account.

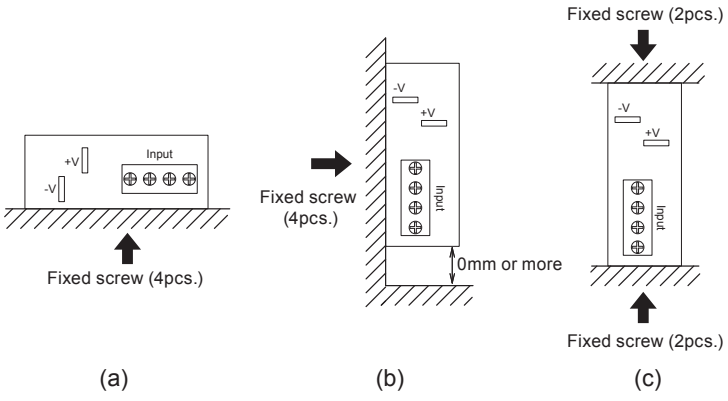

■The power supplies have a built-in forced cooling fan. Do not block ventilation at the suction side and its opposite side.

■If you use a power supply in a dusty environment, it can cause a failure. Please consider taking such countermeasures as installing an air filter near the suction area of the system to prevent a failure.

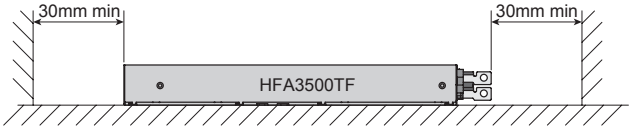

Derating

● Derating curve depends on Input voltage

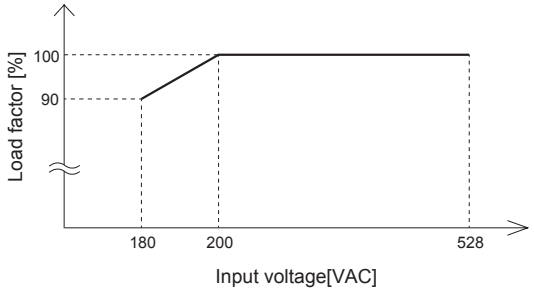

● Derating curve depends on Output voltage

■Specifications for ripple and ripple noise changes in the shadedarea.

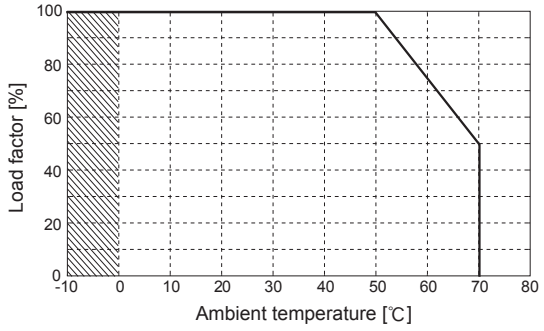

Instruction Manual

◆ It is neccessary to read the “Instruction Manual” and “Before using our product” before you use our product.

Instruction Manual	https://www.cosel.co.jp/redirect/catalog/en/HFA/
Before using our product	https://en.cosel.co.jp/technical/caution/index.html

HFA NOTICE

Basic Characteristics Data

Model	Circuit method	Switching frequency [kHz]	Input current [A] ✻	Inrush current protection	PCB/Pattern			Series/Parallel operation availability	
					Material	Single sided	Double sided	Series operation	Parallel operation
HFA3500TF	Active filter	130	11.7	Thermistor + IGBT + Relay	FR-4		Yes	Yes	Yes
	Phase-shift Full-bridge converter	(Primary) 95							
		(Secondary) 190							

✻The value of input current is at 200VAC input and rated load.