COSEL DC-DC Converters PCB Mount Type

MGFS1R5

Ordering information

MGF	S	1R5	24	05	-□
①	②	③	④	⑤	⑧

①Series name
②Single output
③Output wattage
④Input voltage
⑤Output voltage
⑥Optional
Y2: Output voltage adjustable (+10%, -5%)

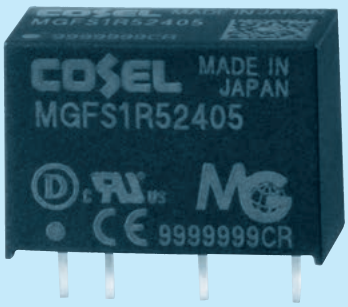

MODEL		MGFS1R5243R3	MGFS1R52405	MGFS1R52412	MGFS1R52415
MAX OUTPUT WATTAGE[W]		1.32	1.50	1.56	1.50
DC OUTPUT	VOLTAGE[V]	3.3	5	12	15
	CURRENT[A]	0.4	0.3	0.13	0.1

SPECIFICATIONS

	MODEL		MGFS1R5243R3	MGFS1R52405	MGFS1R52412	MGFS1R52415
INPUT	VOLTAGE[V]		DC9 - 36(Surge voltage 50V,100ms max)			
	CURRENT[A]	*1	0.072typ	0.079typ	0.079typ	0.077typ
	EFFICIENCY[%]	*1	77typ	80typ	83typ	82typ
OUTPUT	VOLTAGE[V]		3.3	5	12	15
	CURRENT[A]		0.4	0.3	0.13	0.1
	LINE REGULATION[mV]		20max	20max	48max	60max
	LOAD REGULATION[mV]		20max	20max	48max	60max
	RIPPLE[mVp-p]	*2	120max	120max	150max	150max
	RIPPLE NOISE[mVp-p]	*2	200max	200max	200max	200max
	TEMPERATURE REGULATION[mV]	-20 to +85℃	50max	50max	150max	180max
		-40 to +85℃	80max	80max	240max	290max
	DRIFT[mV]	*3	20max	20max	48max	60max
	START-UP TIME[ms]		30max (Minimum input, Io=100%)			
	OUTPUT VOLTAGE SETTING[V]		3.21 - 3.42	4.90 - 5.21	11.64 - 12.36	14.55 - 15.45
PROTECTION CIRCUIT	OVERCURRENT PROTECTION		Works over 105% of rating and recovers automatically			

MODEL		MGFS1R5483R3	MGFS1R54805	MGFS1R54812	MGFS1R54815
MAX OUTPUT WATTAGE[W]		1.32	1.50	1.56	1.50
DC OUTPUT	VOLTAGE[V]	3.3	5	12	15
	CURRENT[A]	0.4	0.3	0.13	0.1

SPECIFICATIONS

	MODEL		MGFS1R5483R3	MGFS1R54805	MGFS1R54812	MGFS1R54815
INPUT	VOLTAGE[V]		DC18 - 76(Surge voltage 100V,100ms max)			
	CURRENT[A]	*1	0.037typ	0.040typ	0.040typ	0.039typ
	EFFICIENCY[%]	*1	76typ	79typ	82typ	81typ
OUTPUT	VOLTAGE[V]		3.3	5	12	15
	CURRENT[A]		0.4	0.3	0.13	0.1
	LINE REGULATION[mV]		20max	20max	48max	60max
	LOAD REGULATION[mV]		20max	20max	48max	60max
	RIPPLE[mVp-p]	*2	120max	120max	150max	150max
	RIPPLE NOISE[mVp-p]	*2	200max	200max	200max	200max
	TEMPERATURE REGULATION[mV]	-20 to +85℃	50max	50max	150max	180max
		-40 to +85℃	80max	80max	240max	290max
	DRIFT[mV]	*3	20max	20max	48max	60max
	START-UP TIME[ms]		30max (Minimum input, Io=100%)			
	OUTPUT VOLTAGE SETTING[V]		3.21 - 3.42	4.90 - 5.21	11.64 - 12.36	14.55 - 15.45
PROTECTION CIRCUIT	OVERCURRENT PROTECTION		Works over 105% of rating and recovers automatically			

GENERAL SPECIFICATIONS

ISOLATION	INPUT-OUTPUT	DC1,500V or AC1,000V 1minute, Cutoff current=10mA, DC500V 1,000MΩ min (20±15℃)
ENVIRONMENT	OPERATING TEMP.,HUMID.AND ALTITUDE	-40 to +85℃, 20 to 95%RH (Non condensing) (Required derating), 5,000m (16,400feet) max
	STORAGE TEMP.,HUMID.AND ALTITUDE	-40 to +100℃, 20 to 95%RH (Non condensing), 9,000m (30,000feet) max
	VIBRATION	10 - 55Hz 98.0m/s² (10G), 3minute period, 60minutes each along X, Y and Z axis
	IMPACT	490.3m/s² (50G) 11ms, once each along X, Y and Z axis
SAFETY	AGENCY APPROVALS	UL60950-1, C-UL, EN60950-1
OTHERS	CASE SIZE/WEIGHT	17.0×12.0×8.5mm [0.67×0.48×0.34 inches] (W×H×D) / 4g max
	COOLING METHOD	Convection/Forced air

*1 Rated input 24V or 48V DC Io=100%
*2 Ripple and ripple noise is measured by using test board with ceramic capacitor 1μF at 50mm from output pins.
*3 Drift is the DC output accuracy for eight hours period after a half-hour warm-up at 25℃.
* Parallel operation with other model is not possible.
* MGFW1R5xx12/MGFW1R5xx15 is available as single output, +24V/+30V

External view

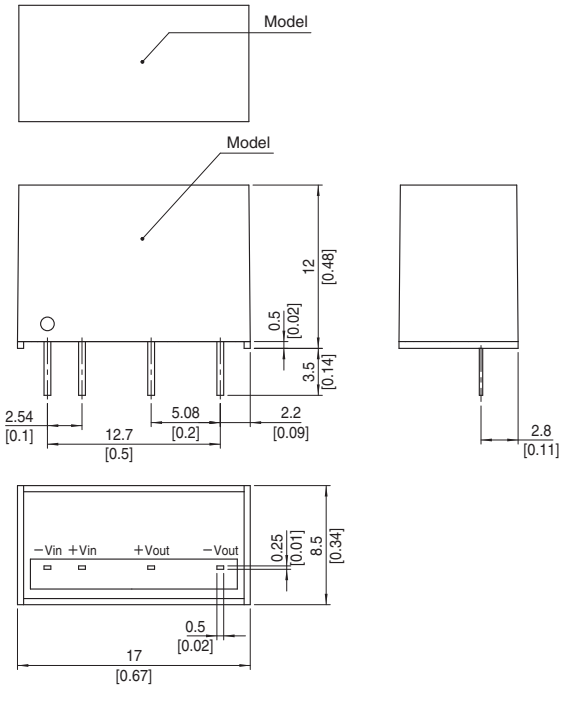

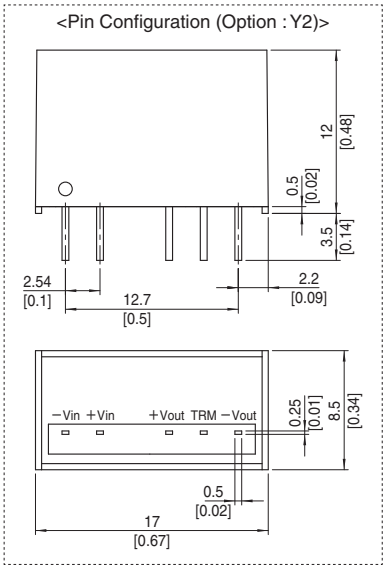

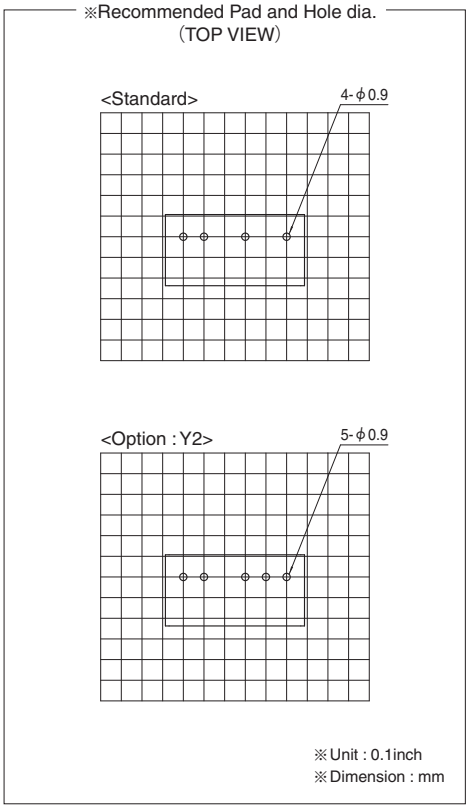

※ Tolerance ±0.5 [±0.02]
※ Dimensions in mm, [ ]= inches
※ Pin terminal material : Copper
※ Planting treatment of terminal : Lead free plating
※ Case material : PBT
※ Weight 4g max

COSEL DC-DC Converters PCB Mount Type

MGFS3

Ordering information

MGF	S	3	24	05	-□
①	②	③	④	⑤	⑥

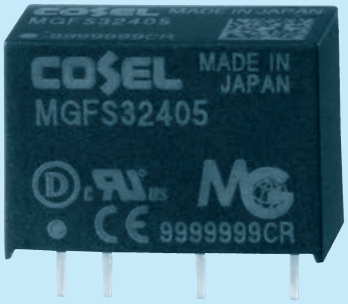

①Series name
②Single output
③Output wattage
④Input voltage
⑤Output voltage
⑥Optional
Y2: Output voltage adjustable (+10%, -5%)

MODEL		MGFS3243R3	MGFS32405	MGFS32412	MGFS32415
MAX OUTPUT WATTAGE[W]		2.64	3.00	3.00	3.00
DC OUTPUT	VOLTAGE[V]	3.3	5	12	15
	CURRENT[A]	0.8	0.6	0.25	0.2

SPECIFICATIONS

	MODEL		MGFS3243R3	MGFS32405	MGFS32412	MGFS32415
INPUT	VOLTAGE[V]		DC9 - 36 (Surge voltage 50V,100ms max) (Refer to the instruction manual for input voltage derating.)			
	CURRENT[A]	*1	0.15typ	0.16typ	0.15typ	0.15typ
	EFFICIENCY[%]	*1	78typ	81typ	85typ	84typ
OUTPUT	VOLTAGE[V]		3.3	5	12	15
	CURRENT[A]		0.8	0.6	0.25	0.2
	LINE REGULATION[mV]		20max	20max	48max	60max
	LOAD REGULATION[mV]		20max	20max	48max	60max
	RIPPLE[mVp-p]	*2	120max	120max	150max	150max
	RIPPLE NOISE[mVp-p]	*2	200max	200max	200max	200max
	TEMPERATURE REGULATION[mV]	-20 to +75℃	50max	50max	150max	180max
		-40 to +75℃	80max	80max	240max	290max
	DRIFT[mV]	*3	20max	20max	48max	60max
	START-UP TIME[ms]		30max (Minimum input, Io=100%)			
	OUTPUT VOLTAGE SETTING[V]		3.21 - 3.42	4.90 - 5.21	11.64 - 12.36	14.55 - 15.45
PROTECTION CIRCUIT	OVERCURRENT PROTECTION		Works over 105% of rating and recovers automatically			

MODEL		MGFS3483R3	MGFS34805	MGFS34812	MGFS34815
MAX OUTPUT WATTAGE[W]		2.64	3.00	3.00	3.00
DC OUTPUT	VOLTAGE[V]	3.3	5	12	15
	CURRENT[A]	0.8	0.6	0.25	0.2

SPECIFICATIONS

	MODEL		MGFS3483R3	MGFS34805	MGFS34812	MGFS34815
INPUT	VOLTAGE[V]		DC18 - 76 (Surge voltage 100V,100ms max) (Refer to the instruction manual for input voltage derating.)			
	CURRENT[A]	*1	0.072typ	0.079typ	0.076typ	0.076typ
	EFFICIENCY[%]	*1	77typ	80typ	83typ	83typ
OUTPUT	VOLTAGE[V]		3.3	5	12	15
	CURRENT[A]		0.8	0.6	0.25	0.2
	LINE REGULATION[mV]		20max	20max	48max	60max
	LOAD REGULATION[mV]		20max	20max	48max	60max
	RIPPLE[mVp-p]	*2	120max	120max	150max	150max
	RIPPLE NOISE[mVp-p]	*2	200max	200max	200max	200max
	TEMPERATURE REGULATION[mV]	-20 to +75℃	50max	50max	150max	180max
		-40 to +75℃	80max	80max	240max	290max
	DRIFT[mV]	*3	20max	20max	48max	60max
	START-UP TIME[ms]		30max (Minimum input, Io=100%)			
	OUTPUT VOLTAGE SETTING[V]		3.21 - 3.42	4.90 - 5.21	11.64 - 12.36	14.55 - 15.45
PROTECTION CIRCUIT	OVERCURRENT PROTECTION		Works over 105% of rating and recovers automatically			

GENERAL SPECIFICATIONS

ISOLATION	INPUT-OUTPUT	DC1,500V or AC1,000V 1minute, Cutoff current=10mA, DC500V 1,000MΩ min (20±15℃)
ENVIRONMENT	OPERATING TEMP.,HUMID.AND ALTITUDE	-40 to +85℃, 20 to 95%RH (Non condensing) (Required derating), 5,000m (16,400feet) max
	STORAGE TEMP.,HUMID.AND ALTITUDE	-40 to +100℃, 20 to 95%RH (Non condensing), 9,000m (30,000feet) max
	VIBRATION	10 - 55Hz 98.0m/s² (10G), 3minute period, 60minutes each along X, Y and Z axis
	IMPACT	490.3m/s² (50G) 11ms, once each along X, Y and Z axis
SAFETY	AGENCY APPROVALS	UL60950-1, C-UL, EN60950-1
OTHERS	CASE SIZE/WEIGHT	17.0×12.0×8.5mm [0.67×0.48×0.34 inches] (W×H×D) / 4g max
	COOLING METHOD	Convection/Forced air

*1 Rated input 24V or 48V DC Io=100%
*2 Ripple and ripple noise is measured by using test board with ceramic capacitor 1μF at 50mm from output pins.
*3 Drift is the DC output accuracy for eight hours period after a half-hour warm-up at 25℃.
* Parallel operation with other model is not possible.
* MGFW3xx12/MGFW3xx15 is available as single output, +24V/+30V

External view

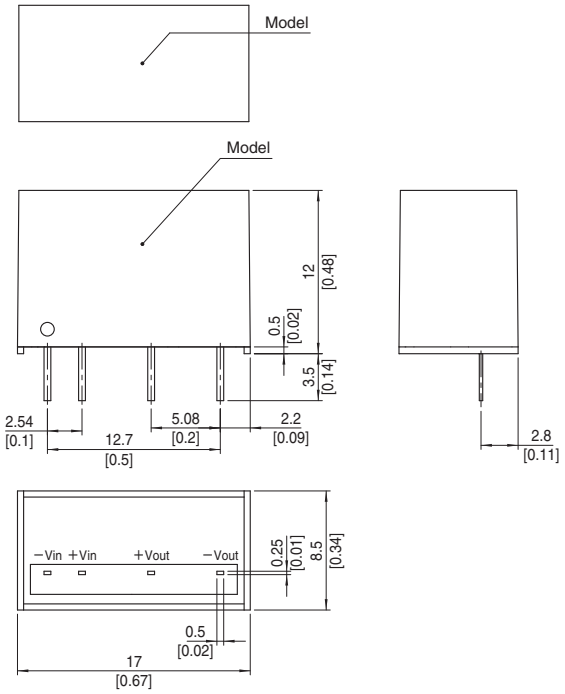

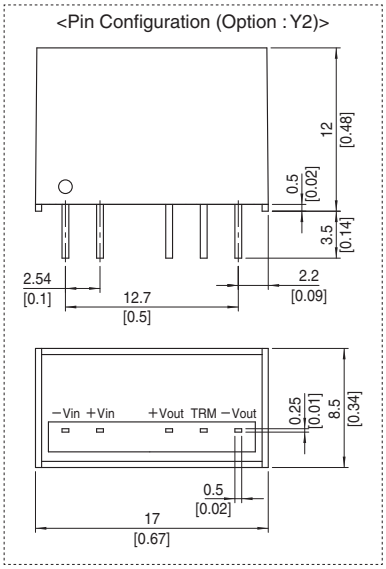

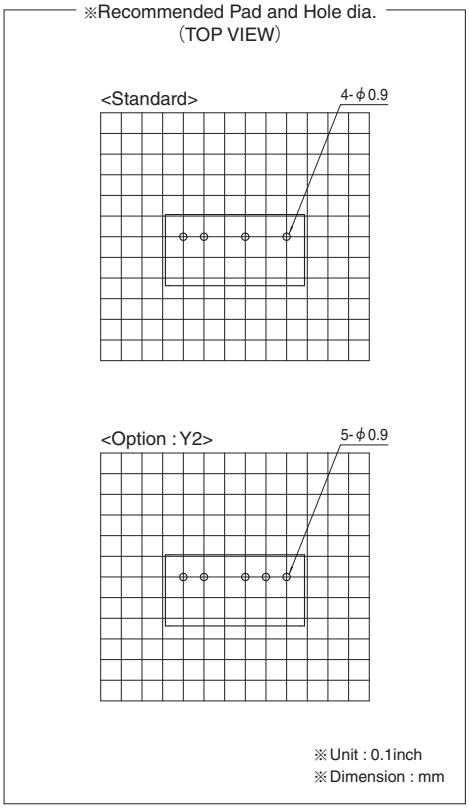

※ Tolerance ±0.5 [±0.02]
※ Dimensions in mm, [ ]= inches
※ Pin terminal material : Copper
※ Planting treatment of terminal : Lead free plating
※ Case material : PBT
※ Weight 4g max

COSEL DC-DC Converters PCB Mount Type

MGFS6

Ordering information

MGF	S	6	24	05	-□
①	②	③	④	⑤	⑥

①Series name
②Single output
③Output wattage
④Input voltage
⑤Output voltage
⑥Optional
Y2: Output voltage adjustable (+10%, -5%)

RoHS

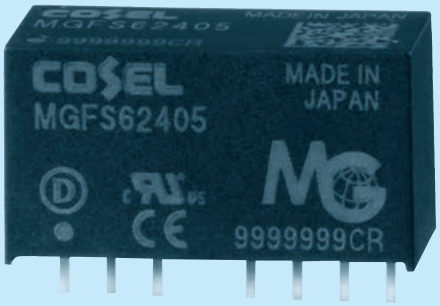

MODEL		MGFS6243R3	MGFS62405	MGFS62412	MGFS62415
MAX OUTPUT WATTAGE[W]		5.28	6.0	6.0	6.0
DC OUTPUT	VOLTAGE[V]	3.3	5	12	15
	CURRENT[A]	1.6	1.2	0.5	0.4

SPECIFICATIONS

	MODEL		MGFS6243R3	MGFS62405	MGFS62412	MGFS62415
INPUT	VOLTAGE[V]		DC9 - 36 (Surge voltage 50V,100ms max)			
	CURRENT[A]	*1	0.28typ	0.30typ	0.29typ	0.29typ
	EFFICIENCY[%]	*1	80typ	84typ	88typ	88typ
OUTPUT	VOLTAGE[V]		3.3	5	12	15
	CURRENT[A]		1.6	1.2	0.5	0.4
	LINE REGULATION[mV]		20max	20max	48max	60max
	LOAD REGULATION[mV]		20max	20max	48max	60max
	RIPPLE[mVp-p]	Io=30% -	75max	75max	100max	100max
		*2 Io=0 - 30%	225max	225max	300max	300max
	RIPPLE NOISE[mVp-p]	Io=30% -	120max	120max	150max	150max
		*2 Io=0 - 30%	300max	300max	400max	400max
	TEMPERATURE REGULATION[mV]	-20 to +65℃	50max	50max	150max	180max
		-40 to +65℃	80max	80max	240max	290max
	DRIFT[mV]	*3	20max	20max	48max	60max
	START-UP TIME[ms]		30max (Minimum input, Io=100%)			
	OUTPUT VOLTAGE SETTING[V]		3.21 - 3.42	4.90 - 5.21	11.64 - 12.36	14.55 - 15.45
PROTECTION CIRCUIT AND OTHERS	OVERCURRENT PROTECTION		Works over 105% of rating and recovers automatically			
	REMOTE ON/OFF		Provided (Negative logic L : ON, H : OFF)			

MODEL		MGFS6483R3	MGFS64805	MGFS64812	MGFS64815
MAX OUTPUT WATTAGE[W]		5.28	6.0	6.0	6.0
DC OUTPUT	VOLTAGE[V]	3.3	5	12	15
	CURRENT[A]	1.6	1.2	0.5	0.4

SPECIFICATIONS

	MODEL		MGFS6483R3	MGFS64805	MGFS64812	MGFS64815
INPUT	VOLTAGE[V]		DC18 - 76 (Surge voltage 100V, 100ms max)			
	CURRENT[A]	*1	0.14typ	0.15typ	0.15typ	0.15typ
	EFFICIENCY[%]	*1	80typ	84typ	88typ	88typ
OUTPUT	VOLTAGE[V]		3.3	5	12	15
	CURRENT[A]		1.6	1.2	0.5	0.4
	LINE REGULATION[mV]		20max	20max	48max	60max
	LOAD REGULATION[mV]		20max	20max	48max	60max
	RIPPLE[mVp-p]	Io=30% -	75max	75max	100max	100max
		*2 Io=0 - 30%	225max	225max	300max	300max
	RIPPLE NOISE[mVp-p]	Io=30% -	120max	120max	150max	150max
		*2 Io=0 - 30%	300max	300max	400max	400max
	TEMPERATURE REGULATION[mV]	-20 to +65℃	50max	50max	150max	180max
		-40 to +65℃	80max	80max	240max	290max
	DRIFT[mV]	*3	20max	20max	48max	60max
	START-UP TIME[ms]		30max (Minimum input, Io=100%)			
	OUTPUT VOLTAGE SETTING[V]		3.21 - 3.42	4.90 - 5.21	11.64 - 12.36	14.55 - 15.45
PROTECTION CIRCUIT AND OTHERS	OVERCURRENT PROTECTION		Works over 105% of rating and recovers automatically			
	REMOTE ON/OFF		Provided (Negative logic L : ON, H : OFF)			

GENERAL SPECIFICATIONS

ISOLATION	INPUT-OUTPUT	DC1,500V or AC1,000V 1minute, Cutoff current=10mA, DC500V 1,000MΩ min (20±15℃)
ENVIRONMENT	OPERATING TEMP.,HUMID.AND ALTITUDE	-40 to +85℃, 20 to 95%RH (Non condensing) (Required derating), 5,000m (16,400feet) max
	STORAGE TEMP.,HUMID.AND ALTITUDE	-40 to +100℃, 20 to 95%RH (Non condensing), 9,000m (30,000feet) max
	VIBRATION	10 - 55Hz 98.0m/s² (10G), 3minute period, 60minutes each along X, Y and Z axis
	IMPACT	490.3m/s² (50G) 11ms, once each along X, Y and Z axis
SAFETY	AGENCY APPROVALS	UL60950-1, C-UL, EN60950-1
OTHERS	CASE SIZE/WEIGHT	22.0×12.0×9.5mm [0.87×0.48×0.38 inches] (W×H×D) / 7g max
	COOLING METHOD	Convection/Forced air

*1 Rated input 24V or 48V DC Io=100%
*2 Ripple and ripple noise is measured by using test board with ceramic capacitor 1μF at 50mm from output pins.
*3 Drift is the DC output accuracy for eight hours period after a half-hour warm-up at 25℃.
* Parallel operation with other model is not possible.
* MGFW6xx12/MGFW6xx15 is available as single output, +24V/+30V

External view

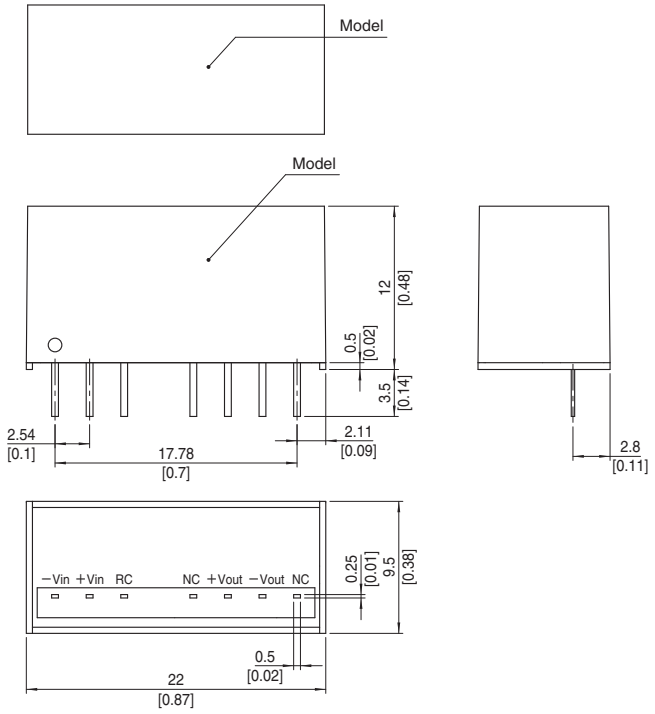

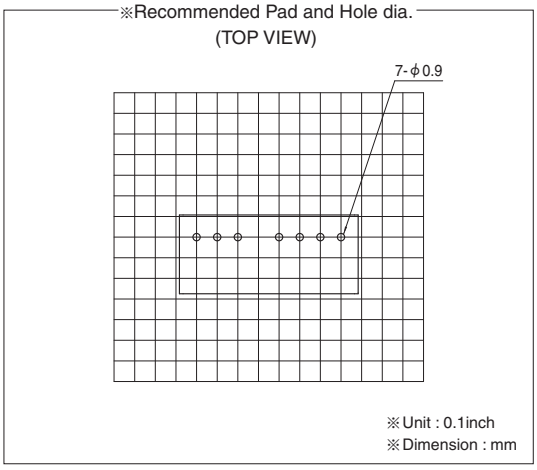

※ Tolerance ±0.5 [±0.02]
※ Dimensions in mm, [ ]= inches
※ Pin terminal material : Copper
※ Planting treatment of terminal : Lead free plating
※ Case material : PBT
※ Weight 7g max

<Pin Configuration (Option : Y2)>

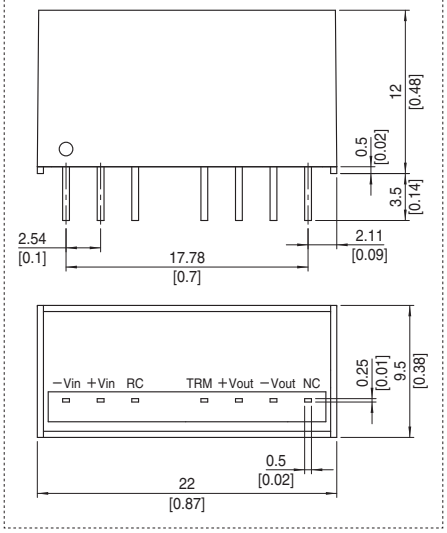

COSEL DC-DC Converters PCB Mount Type

MGFS10

Ordering information

MGF	S	10	24	05	-□
①	②	③	④	⑤	⑧

①Series name
②Single output
③Output wattage
④Input voltage
⑤Output voltage
⑥Optional
Y2: Output voltage adjustable (+10%, -5%)

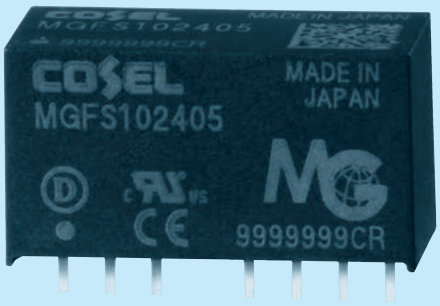

MODEL		MGFS10243R3	MGFS102405	MGFS102412	MGFS102415
MAX OUTPUT WATTAGE[W]		8.58	10.0	10.8	10.5
DC OUTPUT	VOLTAGE[V]	3.3	5	12	15
	CURRENT[A]	2.6	2.0	0.9	0.7

SPECIFICATIONS

	MODEL		MGFS10243R3	MGFS102405	MGFS102412	MGFS102415
INPUT	VOLTAGE[V]		DC9 - 36 (Surge voltage 50V,100ms max) (Refer to the instruction manual for input voltage derating.)			
	CURRENT[A]	*1	0.42typ	0.48typ	0.51typ	0.50typ
	EFFICIENCY[%]	*1	86typ	88typ	89typ	89typ
OUTPUT	VOLTAGE[V]		3.3	5	12	15
	CURRENT[A]		2.6	2.0	0.9	0.7
	LINE REGULATION[mV]		20max	20max	48max	60max
	LOAD REGULATION[mV]		20max	20max	48max	60max
	RIPPLE[mVp-p]	Io=30% -	75max	75max	100max	100max
		*2 Io=0 - 30%	225max	225max	300max	300max
	RIPPLE NOISE[mVp-p]	Io=30% -	120max	120max	150max	150max
		*2 Io=0 - 30%	300max	300max	400max	400max
	TEMPERATURE REGULATION[mV]	-20 to +55℃	50max	50max	150max	180max
		-40 to +55℃	80max	80max	240max	290max
	DRIFT[mV]	*3	20max	20max	48max	60max
	START-UP TIME[ms]		30max (Minimum input, Io=100%)			
	OUTPUT VOLTAGE SETTING[V]		3.21 - 3.42	4.90 - 5.21	11.64 - 12.36	14.55 - 15.45
PROTECTION CIRCUIT AND OTHERS	OVERCURRENT PROTECTION		Works over 105% of rating and recovers automatically			
	REMOTE ON/OFF		Provided (Negative logic L : ON, H : OFF)			

MODEL		MGFS10483R3	MGFS104805	MGFS104812	MGFS104815
MAX OUTPUT WATTAGE[W]		8.58	10.0	10.8	10.5
DC OUTPUT	VOLTAGE[V]	3.3	5	12	15
	CURRENT[A]	2.6	2.0	0.9	0.7

SPECIFICATIONS

	MODEL		MGFS10483R3	MGFS104805	MGFS104812	MGFS104815
INPUT	VOLTAGE[V]		DC18 - 76 (Surge voltage 100V,100ms max) (Refer to the instruction manual for input voltage derating.)			
	CURRENT[A]	*1	0.21typ	0.24typ	0.26typ	0.25typ
	EFFICIENCY[%]	*1	86typ	88typ	89typ	89typ
OUTPUT	VOLTAGE[V]		3.3	5	12	15
	CURRENT[A]		2.6	2.0	0.9	0.7
	LINE REGULATION[mV]		20max	20max	48max	60max
	LOAD REGULATION[mV]		20max	20max	48max	60max
	RIPPLE[mVp-p]	Io=30% -	75max	75max	100max	100max
		*2 Io=0 - 30%	225max	225max	300max	300max
	RIPPLE NOISE[mVp-p]	Io=30% -	120max	120max	150max	150max
		*2 Io=0 - 30%	300max	300max	400max	400max
	TEMPERATURE REGULATION[mV]	-20 to +55℃	50max	50max	150max	180max
		-40 to +55℃	80max	80max	240max	290max
	DRIFT[mV]	*3	20max	20max	48max	60max
	START-UP TIME[ms]		30max (Minimum input, Io=100%)			
	OUTPUT VOLTAGE SETTING[V]		3.21 - 3.42	4.90 - 5.21	11.64 - 12.36	14.55 - 15.45
PROTECTION CIRCUIT AND OTHERS	OVERCURRENT PROTECTION		Works over 105% of rating and recovers automatically			
	REMOTE ON/OFF		Provided (Negative logic L : ON, H : OFF)			

GENERAL SPECIFICATIONS

ISOLATION	INPUT-OUTPUT	DC1,500V or AC1,000V 1minute, Cutoff current=10mA, DC500V 1,000MΩ min (20±15℃)
ENVIRONMENT	OPERATING TEMP.,HUMID.AND ALTITUDE	-40 to +85℃, 20 to 95%RH (Non condensing) (Required derating), 5,000m (16,400feet) max
	STORAGE TEMP.,HUMID.AND ALTITUDE	-40 to +100℃, 20 to 95%RH (Non condensing), 9,000m (30,000feet) max
	VIBRATION	10 - 55Hz 98.0m/s² (10G), 3minute period, 60minutes each along X, Y and Z axis
	IMPACT	490.3m/s² (50G) 11ms, once each along X, Y and Z axis
SAFETY	AGENCY APPROVALS	UL60950-1, C-UL, EN60950-1
OTHERS	CASE SIZE/WEIGHT	22.0×12.0×9.5mm [0.87×0.48×0.38 inches] (W×H×D) / 7g max
	COOLING METHOD	Convection/Forced air

*1 Rated input 24V or 48V DC Io=100%
*2 Ripple and ripple noise is measured by using test board with ceramic capacitor 1μF at 50mm from output pins.
*3 Drift is the DC output accuracy for eight hours period after a half-hour warm-up at 25℃.
* Parallel operation with other model is not possible.
* MGFW10xx12/MGFW10xx15 is available as single output, +24V/+30V

External view

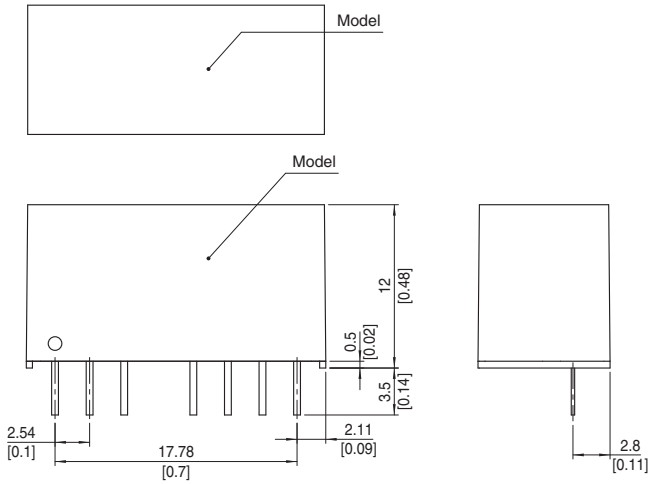

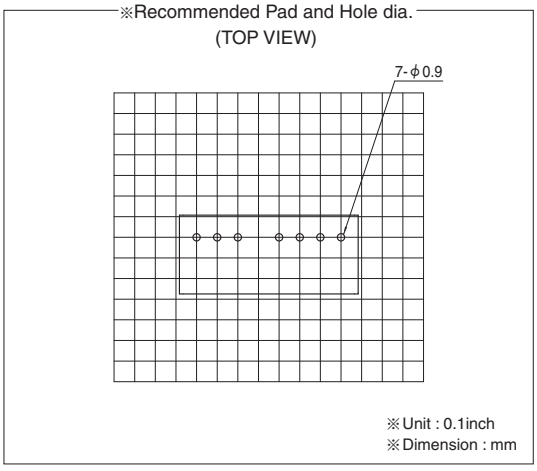

※ Tolerance ±0.5 [±0.02]
※ Dimensions in mm, [ ]= inches
※ Pin terminal material : Copper
※ Planting treatment of terminal : Lead free plating
※ Case material : PBT
※ Weight 7g max

<Pin Configuration (Option : Y2)>

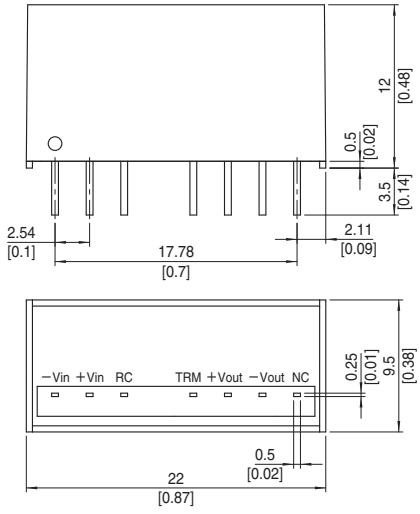

COSEL DC-DC Converters PCB Mount Type

MGFS15

Ordering information

MGF	S	15	24	05	-□
①	②	③	④	⑤	⑥

①Series name
②Single output
③Output wattage
④Input voltage
⑤Output voltage
⑥Optional
G: Capacitor between Input and Output is removed.
R: with Remote ON/OFF (Positive logic control)

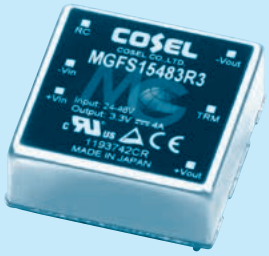

MODEL		MGFS15243R3	MGFS152405	MGFS152412	MGFS152415
MAX OUTPUT WATTAGE[W]		13.2	15	15.6	15
DC OUTPUT	VOLTAGE[V] *1	3.3	5	12	15
	CURRENT[A]	4	3	1.3	1

SPECIFICATIONS

	MODEL		MGFS15243R3	MGFS152405	MGFS152412	MGFS152415
INPUT	VOLTAGE[V]		DC9 - 36			
	CURRENT[A]	*2	0.63typ	0.71typ	0.73typ	0.70typ
	EFFICIENCY[%]	*2	87typ	88typ	89typ	89typ
OUTPUT	VOLTAGE[V]		3.3	5	12	15
	CURRENT[A]		4	3	1.3	1
	LINE REGULATION[mV]		13.2max	20max	48max	60max
	LOAD REGULATION[mV]		13.2max	20max	48max	60max
	RIPPLE[mVp-p] *3	-20 to +60℃	75max	75max	100max	100max
		-40 to -20℃	100max	100max	120max	120max
	RIPPLE NOISE[mVp-p] *3	-20 to +60℃	75max	75max	100max	100max
		-40 to -20℃	150max	150max	150max	150max
	TEMPERATURE REGULATION[mV]	-20 to +60℃	50max	50max	150max	180max
		-40 to +60℃	80max	80max	240max	290max
	DRIFT[mV]	*4	20max	20max	48max	60max
	START-UP TIME[ms]		30max (Minimum input, Io=100%)			
	OUTPUT VOLTAGE ADJUSTMENT RANGE		Fixed (TRM pin open) ±10% adjustable by external VR			
	OUTPUT VOLTAGE SETTING[V]	*5	3.296 - 3.404	4.975 - 5.137	11.857 - 12.243	14.839 - 15.321
PROTECTION CIRCUIT AND OTHERS	OVERCURRENT PROTECTION		Works over 105% of rating and recovers automatically			
	REMOTE ON/OFF		Provided (Negative logic L:ON, H:OFF)			

MODEL		MGFS15483R3	MGFS154805	MGFS154812	MGFS154815
MAX OUTPUT WATTAGE[W]		13.2	15	15.6	15
DC OUTPUT	VOLTAGE[V] *1	3.3	5	12	15
	CURRENT[A]	4	3	1.3	1

SPECIFICATIONS

	MODEL		MGFS15483R3	MGFS154805	MGFS154812	MGFS154815
INPUT	VOLTAGE[V]		DC18 - 76			
	CURRENT[A]	*2	0.32typ	0.36typ	0.37typ	0.35typ
	EFFICIENCY[%]	*2	87typ	88typ	88typ	89typ
OUTPUT	VOLTAGE[V]		3.3	5	12	15
	CURRENT[A]		4	3	1.3	1
	LINE REGULATION[mV]		13.2max	20max	48max	60max
	LOAD REGULATION[mV]		13.2max	20max	48max	60max
	RIPPLE[mVp-p] *3	-20 to +60℃	75max	75max	100max	100max
		-40 to -20℃	100max	100max	120max	120max
	RIPPLE NOISE[mVp-p] *3	-20 to +60℃	75max	75max	100max	100max
		-40 to -20℃	150max	150max	150max	150max
	TEMPERATURE REGULATION[mV]	-20 to +60℃	50max	50max	150max	180max
		-40 to +60℃	80max	80max	240max	290max
	DRIFT[mV]	*4	20max	20max	48max	60max
	START-UP TIME[ms]		30max (Minimum input, Io=100%)			
	OUTPUT VOLTAGE ADJUSTMENT RANGE		Fixed (TRM pin open) ±10% adjustable by external VR			
	OUTPUT VOLTAGE SETTING[V]	*5	3.296 - 3.404	4.975 - 5.137	11.857 - 12.243	14.839 - 15.321
PROTECTION CIRCUIT AND OTHERS	OVERCURRENT PROTECTION		Works over 105% of rating and recovers automatically			
	REMOTE ON/OFF		Provided (Negative logic L:ON, H:OFF)			

GENERAL SPECIFICATIONS

ISOLATION	INPUT-OUTPUT	DC1,500V 1minute, Cutoff current = 10mA, DC500V 1,000MΩ min (20±15℃)
	INPUT-CASE	DC1,000V 1minute, Cutoff current = 10mA, DC500V 1,000MΩ min (20±15℃)
	OUTPUT-CASE	DC1,000V 1minute, Cutoff current = 10mA, DC500V 1,000MΩ min (20±15℃)
ENVIRONMENT	OPERATING TEMP.,HUMID.AND ALTITUDE	-40 to +85℃, 20 to 95%RH (Non condensing) (Required Derating), 3,000m (10,000feet) max
	STORAGE TEMP.,HUMID.AND ALTITUDE	-40 to +100℃, 20 to 95%RH (Non condensing), 9,000m (30,000feet) max
	VIBRATION	10 - 55Hz, 98.0m/s² (10G), 3minutes period, 60minutes each along X, Y and Z axis
	IMPACT	490.3m/s² (50G), 11ms, once each along X, Y and Z axis
SAFETY	AGENCY APPROVALS	UL60950-1, C-UL, EN60950-1
OTHERS	CASE SIZE/WEIGHT	25.4×9.9×25.4mm [1×0.39×1 inches] (W×H×D) / 20g max
	COOLING METHOD	Convection/Forced air

*1 MGFW15xx05/MGFW15xx12/MGFW15xx15 is available as single output, +10V/+24V/+30V
*2 Rated input 12V, 24V or 48V DC Io=100%
*3 Ripple and Ripple Noise is measured by using test board with ceramic capacitor 22μF at 50mm from output pins. (20MHz Osilloscope)
*4 Drift is the DC output accuracy for eight hours period after a half-hour warm-up at 25℃.
*5 Rated input voltage (DC24V, DC48V), rated output wattage, ambient temperature at 25℃.
* Parallel operation with other model is not possible.

External view

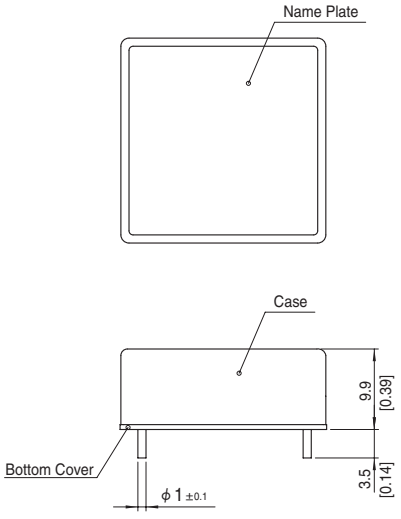

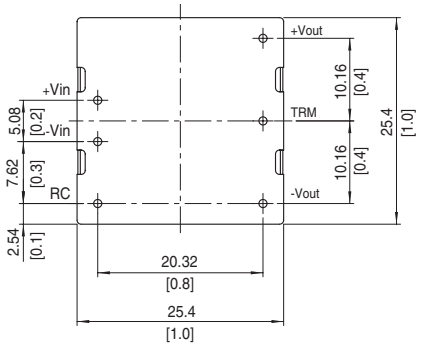

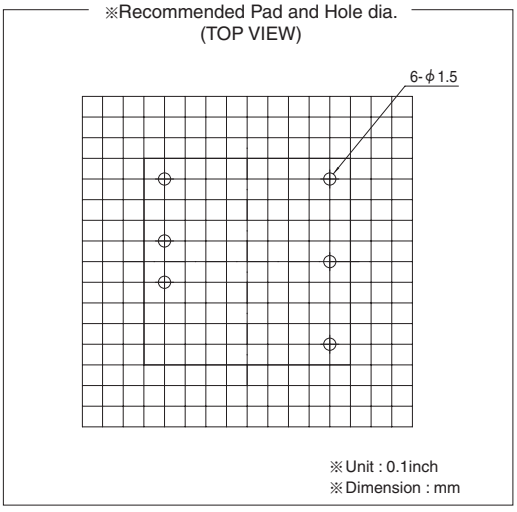

※ Tolerance ±0.5 [±0.02]
※ Dimensions in mm, [ ]=inches
※ Pin terminal material : Copper
※ Plating treatment of terminal : Lead free plating
※ Case material : Brass
※ Plating treatment of case : Nickel plating
※ Bottom Cover : FR4 (t=0.6) [t=0.024]
※ Please keep enough creepage distance with the pattern on PCB and other components.
※ Weight 20g max

COSEL DC-DC Converters PCB Mount Type

MGFS30

Ordering information

MGF	S	30	24	05	-□
①	②	③	④	⑤	⑥



①Series name
②Single output
③Output wattage
④Input voltage
⑤Output voltage
⑥Optional
G: Capacitor between Input and Output is removed.
R: with Remote ON/OFF (Positive logic control)

MODEL		MGFS30243R3	MGFS302405	MGFS302412	MGFS302415
MAX OUTPUT WATTAGE[W]		24.75	30	30	30
DC OUTPUT	VOLTAGE[V] *1	3.3	5	12	15
	CURRENT[A]	7.5	6	2.5	2

SPECIFICATIONS

	MODEL		MGFS30243R3	MGFS302405	MGFS302412	MGFS302415
INPUT	VOLTAGE[V]		DC9 - 36			
	CURRENT[A] *2		1.16typ	1.39typ	1.40typ	1.40typ
	EFFICIENCY[%] *2		89typ	90typ	89typ	89typ
OUTPUT	VOLTAGE[V]		3.3	5	12	15
	CURRENT[A]		7.5	6	2.5	2
	LINE REGULATION[mV]		13.2max	20max	48max	60max
	LOAD REGULATION[mV]		13.2max	20max	48max	60max
	RIPPLE[mVp-p] *3	-20 to +60℃	75max	75max	100max	100max
		-40 to -20℃	100max	100max	120max	120max
	RIPPLE NOISE[mVp-p] *3	-20 to +60℃	75max	75max	100max	100max
		-40 to -20℃	150max	150max	150max	150max
	TEMPERATURE REGULATION[mV]	-20 to +60℃	50max	50max	150max	180max
		-40 to +60℃	80max	80max	240max	290max
	DRIFT[mV] *4		20max	20max	48max	60max
	START-UP TIME[ms]		30max (Minimum input, Io=100%)			
	OUTPUT VOLTAGE ADJUSTMENT RANGE		Fixed (TRM pin open) ±10% adjustable by external VR			
	OUTPUT VOLTAGE SETTING[V] *5		3.296 - 3.404	4.975 - 5.137	11.857 - 12.243	14.839 - 15.321
PROTECTION CIRCUIT AND OTHERS	OVERCURRENT PROTECTION		Works over 105% of rating and recovers automatically			
	OVERVOLTAGE PROTECTION		Works over 120 to 160% of rating			
	REMOTE ON/OFF		Provided (Negative logic L:ON, H:OFF)			

MODEL		MGFS30483R3	MGFS304805	MGFS304812	MGFS304815
MAX OUTPUT WATTAGE[W]		24.75	30	30	30
DC OUTPUT	VOLTAGE[V] *1	3.3	5	12	15
	CURRENT[A]	7.5	6	2.5	2

SPECIFICATIONS

	MODEL		MGFS30483R3	MGFS304805	MGFS304812	MGFS304815
INPUT	VOLTAGE[V]		DC18 - 76			
	CURRENT[A] *2		0.58typ	0.70typ	0.70typ	0.70typ
	EFFICIENCY[%] *2		89typ	90typ	89typ	89typ
OUTPUT	VOLTAGE[V]		3.3	5	12	15
	CURRENT[A]		7.5	6	2.5	2
	LINE REGULATION[mV]		13.2max	20max	48max	60max
	LOAD REGULATION[mV]		13.2max	20max	48max	60max
	RIPPLE[mVp-p] *3	-20 to +60℃	75max	75max	100max	100max
		-40 to -20℃	100max	100max	120max	120max
	RIPPLE NOISE[mVp-p] *3	-20 to +60℃	75max	75max	100max	100max
		-40 to -20℃	150max	150max	150max	150max
	TEMPERATURE REGULATION[mV]	-20 to +60℃	50max	50max	150max	180max
		-40 to +60℃	80max	80max	240max	290max
	DRIFT[mV] *4		20max	20max	48max	60max
	START-UP TIME[ms]		30max (Minimum input, Io=100%)			
	OUTPUT VOLTAGE ADJUSTMENT RANGE		Fixed (TRM pin open) ±10% adjustable by external VR			
	OUTPUT VOLTAGE SETTING[V] *5		3.296 - 3.404	4.975 - 5.137	11.857 - 12.243	14.839 - 15.321
PROTECTION CIRCUIT AND OTHERS	OVERCURRENT PROTECTION		Works over 105% of rating and recovers automatically			
	OVERVOLTAGE PROTECTION		Works over 120 to 160% of rating			
	REMOTE ON/OFF		Provided (Negative logic L:ON, H:OFF)			

GENERAL SPECIFICATIONS

ISOLATION	INPUT-OUTPUT	DC1,500V 1minute, Cutoff current = 10mA, DC500V 1,000MΩ min (20±15℃)
	INPUT-CASE	DC1,000V 1minute, Cutoff current = 10mA, DC500V 1,000MΩ min (20±15℃)
	OUTPUT-CASE	DC1,000V 1minute, Cutoff current = 10mA, DC500V 1,000MΩ min (20±15℃)
ENVIRONMENT	OPERATING TEMP.,HUMID.AND ALTITUDE	-40 to +85℃, 20 to 95%RH (Non condensing) (Required Derating), 3,000m (10,000feet) max
	STORAGE TEMP.,HUMID.AND ALTITUDE	-40 to +100℃, 20 to 95%RH (Non condensing), 9,000m (30,000feet) max
	VIBRATION	10 - 55Hz, 98.0m/s² (10G), 3minutes period, 60minutes each along X, Y and Z axis
	IMPACT	490.3m/s² (50G), 11ms, once each along X, Y and Z axis
SAFETY	AGENCY APPROVALS	UL60950-1, C-UL, EN60950-1
OTHERS	CASE SIZE/WEIGHT	25.4×9.9×50.8mm [1×0.39×2 inches] (W×H×D) / 40g max
	COOLING METHOD	Convection/Forced air

*1 MGFW30xx05/MGFW30xx12/MGFW30xx15 is available as single output, +10V/+24V/+30V
*2 Rated input 12V, 24V or 48V DC Io=100%
*3 Ripple and Ripple Noise is measured by using test board with ceramic capacitor 22μF at 50mm from output pins. (20MHz Osilloscope)
*4 Drift is the DC output accuracy for eight hours period after a half-hour warm-up at 25℃.
*5 Rated input voltage (DC24V, DC48V), rated output wattage, ambient temperature at 25℃.
* Parallel operation with other model is not possible.

External view

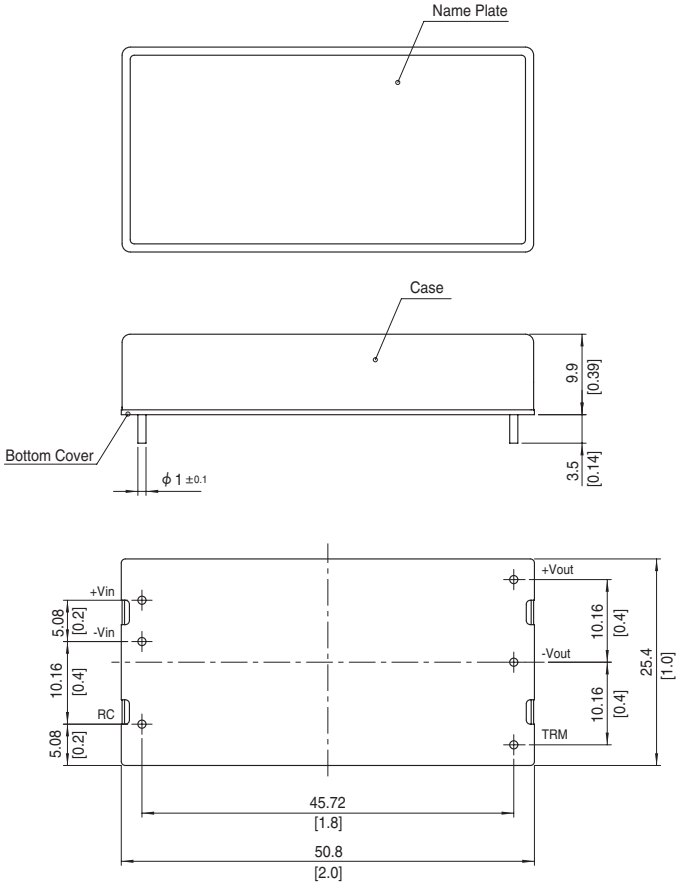

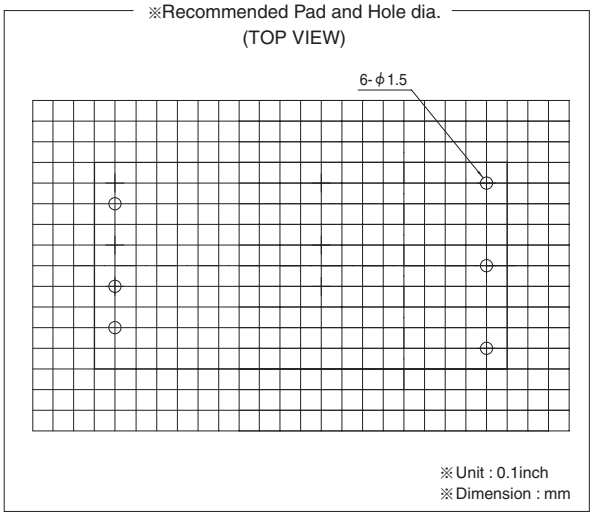

※ Tolerance ±0.5 [±0.02]
※ Dimensions in mm, [ ]=inches
※ Pin terminal material : Copper
※ Plating treatment of terminal : Lead free plating
※ Case material : Brass
※ Plating treatment of case : Nickel plating
※ Bottom Cover : FR4 (t=0.6) [t=0.024]
※ Please keep enough creepage distance with the pattern on PCB and other components.
※ Weight 40g max

COSEL DC-DC Converters PCB Mount Type

MGFS40

Ordering information

MGF	S	40	24	05	-□
①	②	③	④	⑤	⑥



①Series name
②Single output
③Output wattage
④Input voltage
⑤Output voltage
⑥Optional
G: Capacitor between Input and Output is removed.
R: with Remote ON/OFF (Positive logic control)

MODEL		MGFS40053R3	MGFS400505	MGFS400512	MGFS400515	MGFS40243R3	MGFS402405	MGFS402412	MGFS402415
MAX OUTPUT WATTAGE[W]		26.4	30	30	30	33	40	40.8	40.5
DC OUTPUT	VOLTAGE[V] *1	3.3	5	12	15	3.3	5	12	15
	CURRENT[A]	8	6	2.5	2	10	8	3.4	2.7

SPECIFICATIONS

	MODEL		MGFS40053R3	MGFS400505	MGFS400512	MGFS400515	MGFS40243R3	MGFS402405	MGFS402412	MGFS402415
INPUT	VOLTAGE[V]		DC4.5 - 13 (Surge Voltage 15V, 100ms max)				DC9 - 36 (Surge Voltage 50V, 100ms max)			
	CURRENT[A]	*2	6.21typ	6.90typ	6.90typ	6.82typ	1.54typ	1.83typ	1.85typ	1.83typ
	EFFICIENCY[%]	*2	85typ	87typ	87typ	88typ	89typ	91typ	92typ	92typ
OUTPUT	VOLTAGE[V]		3.3	5	12	15	3.3	5	12	15
	CURRENT[A]		8	6	2.5	2	10	8	3.4	2.7
	LINE REGULATION[mV]		13.2max	20max	48max	60max	13.2max	20max	48max	60max
	LOAD REGULATION[mV]		13.2max	20max	48max	60max	13.2max	20max	48max	60max
	RIPPLE[mVp-p]	-20 to +60℃	75max	75max	100max	100max	75max	75max	100max	100max
	*3	-40 to -20℃	100max	100max	120max	120max	100max	100max	120max	120max
	RIPPLE NOISE[mVp-p]	-20 to +60℃	75max	75max	100max	100max	75max	75max	100max	100max
	*3	-40 to -20℃	150max	150max	150max	150max	150max	150max	150max	150max
	TEMPERATURE REGULATION[mV]	-20 to +60℃	50max	50max	150max	180max	50max	50max	150max	180max
		-40 to +60℃	80max	80max	240max	290max	80max	80max	240max	290max
	DRIFT[mV]	*4	20max	20max	48max	60max	20max	20max	48max	60max
	START-UP TIME[ms]		30max (Minimum input, Rated load)							
	OUTPUT VOLTAGE ADJUSTMENT RANGE		Fixed (TRM pin open) ±10% adjustable by external VR							
	OUTPUT VOLTAGE SETTING[V]	*5	3.296 - 3.404	4.975 - 5.137	11.857 - 12.243	14.839 - 15.321	3.296 - 3.404	4.975 - 5.137	11.857 - 12.243	14.839 - 15.321
PROTECTION CIRCUIT AND OTHERS	OVERCURRENT PROTECTION		Works over 105% of rating and recovers automatically							
	OVERVOLTAGE PROTECTION		Work over 115 to 140% of rating							
	REMOTE ON/OFF		Provided (Negative logic L:ON, H:OFF)							

MODEL		MGFS40483R3	MGFS404805	MGFS404812	MGFS404815
MAX OUTPUT WATTAGE[W]		33	40	40.8	40.5
DC OUTPUT	VOLTAGE[V] *1	3.3	5	12	15
	CURRENT[A]	10	8	3.4	2.7

SPECIFICATIONS

	MODEL		MGFS40483R3	MGFS404805	MGFS404812	MGFS404815
INPUT	VOLTAGE[V]		DC18 - 76 (Surge Voltage 100V, 100ms max)			
	CURRENT[A]	*2	0.77typ	0.92typ	0.92typ	0.92typ
	EFFICIENCY[%]	*2	89typ	91typ	92typ	92typ
OUTPUT	VOLTAGE[V]		3.3	5	12	15
	CURRENT[A]		10	8	3.4	2.7
	LINE REGULATION[mV]		13.2max	20max	48max	60max
	LOAD REGULATION[mV]		13.2max	20max	48max	60max
	RIPPLE[mVp-p]	-20 to +60℃	75max	75max	100max	100max
	*3	-40 to -20℃	100max	100max	120max	120max
	RIPPLE NOISE[mVp-p]	-20 to +60℃	75max	75max	100max	100max
	*3	-40 to -20℃	150max	150max	150max	150max
	TEMPERATURE REGULATION[mV]	-20 to +60℃	50max	50max	150max	180max
		-40 to +60℃	80max	80max	240max	290max
	DRIFT[mV]	*4	20max	20max	48max	60max
	START-UP TIME[ms]		30max (Minimum input, Rated load)			
	OUTPUT VOLTAGE ADJUSTMENT RANGE		Fixed (TRM pin open) ±10% adjustable by external VR			
	OUTPUT VOLTAGE SETTING[V]	*5	3.296 - 3.404	4.975 - 5.137	11.857 - 12.243	14.839 - 15.321
PROTECTION CIRCUIT AND OTHERS	OVERCURRENT PROTECTION		Works over 105% of rating and recovers automatically			
	OVERVOLTAGE PROTECTION		Work over 115 to 140% of rating			
	REMOTE ON/OFF		Provided (Negative logic L:ON, H:OFF)			

GENERAL SPECIFICATIONS

ISOLATION	INPUT-OUTPUT	DC1,500V 1minute, Cutoff current = 10mA, DC500V 1,000MΩ min (20±15℃)
	INPUT-CASE	DC1,000V 1minute, Cutoff current = 10mA, DC500V 1,000MΩ min (20±15℃)
	OUTPUT-CASE	DC1,000V 1minute, Cutoff current = 10mA, DC500V 1,000MΩ min (20±15℃)
ENVIRONMENT	OPERATING TEMP.,HUMID.AND ALTITUDE	-40 to +85℃, 20 to 95%RH (Non condensing) (Required Derating), 5,000m (16,400feet) max
	STORAGE TEMP.,HUMID.AND ALTITUDE	-40 to +100℃, 20 to 95%RH (Non condensing), 9,000m (30,000feet) max
	VIBRATION	10 - 55Hz, 98.0m/s² (10G), 3minutes period, 60minutes each along X, Y and Z axis
	IMPACT	490.3m/s² (50G), 11ms, once each along X, Y and Z axis
SAFETY	AGENCY APPROVALS	UL62368-1, C-UL(CSA62368-1), EN62368-1
OTHERS	CASE SIZE/WEIGHT	25.4×9.9×25.4mm (W×H×D) / 30g max
	COOLING METHOD	Convection/Forced air

*1 MGFW40xx12/MGFW40xx15 is available as single output +24V/+30V
*2 Rated input voltage (DC5V, DC24V, DC48V) Io=100%
*3 Riple and Ripple Noise is measured by using test board with ceramic capacitor 22μF and Recommended Capacitance at 50mm from output pins. (20MHz Oscilloscope)
*4 Drift is the DC output accuracy for eight hour period after a half-hour warm-up at 25℃
*5 Rated input voltage (DC5V, DC24V, DC48V), rated output wattage, ambient temperature at 25℃
* Parallel operation with other model is not possible.

External view

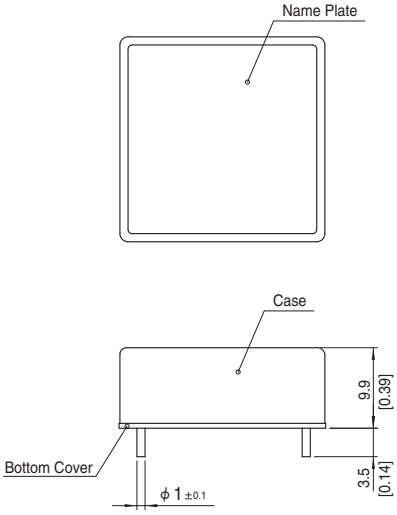

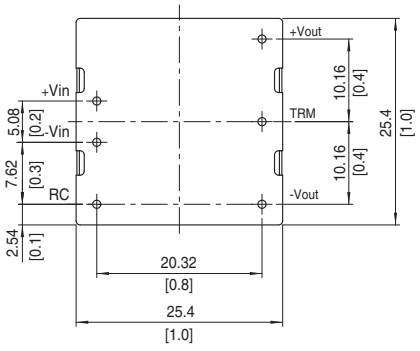

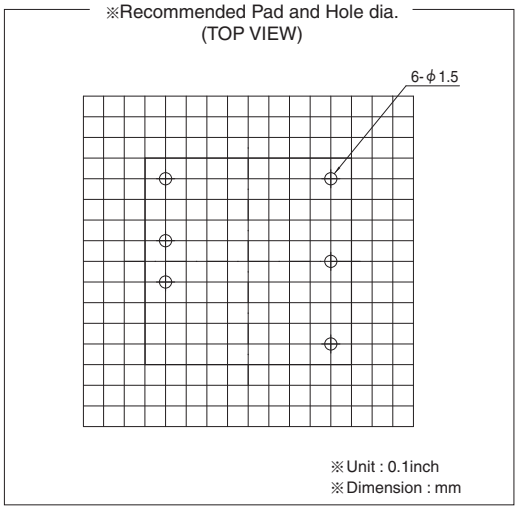

※ Tolerance ±0.5 [±0.02]
※ Dimensions in mm, [ ]=inches
※ Pin terminal material : Copper
※ Plating treatment of terminal : Lead free plating
※ Case material : Brass
※ Plating treatment of case : Nickel plating
※ Bottom Cover : FR4 (t=0.6) [t=0.024]
※ Please keep enough creepage distance with the pattern on PCB and other components.
※ Weight 30g max

COSEL DC-DC Converters PCB Mount Type

MGFS80

Ordering information

MGF	S	80	24	05	-□
①	②	③	④	⑤	⑥



①Series name
②Single output
③Output wattage
④Input voltage
⑤Output voltage
⑥Optional
G: Capacitor between Input and Output is removed.
R: with Remote ON/OFF (Positive logic control)

MODEL		MGFS80243R3	MGFS802405	MGFS802412	MGFS802415
MAX OUTPUT WATTAGE[W]		59.4	80	80.4	81
DC OUTPUT	VOLTAGE[V] *1	3.3	5	12	15
	CURRENT[A]	18	16	6.7	5.4

SPECIFICATIONS

	MODEL		MGFS80243R3	MGFS802405	MGFS802412	MGFS802415
INPUT	VOLTAGE[V]		DC9 - 36 (Surge Voltage 50V, 100ms max)			
	CURRENT[A]	*2	2.69typ	3.60typ	3.56typ	3.59typ
	EFFICIENCY[%]	*2	92typ	93typ	94typ	94typ
OUTPUT	VOLTAGE[V]		3.3	5	12	15
	CURRENT[A]		18	16	6.7	5.4
	LINE REGULATION[mV]		13.2max	20max	48max	60max
	LOAD REGULATION[mV]		20max	20max	48max	60max
	RIPPLE[mVp-p] *3	-20 to +60℃	75max	75max	100max	100max
		-40 to -20℃	100max	100max	120max	120max
		Io=0 to 10%	200max	200max	240max	240max
	RIPPLE NOISE[mVp-p] *3	-20 to +60℃	75max	75max	100max	100max
		-40 to -20℃	150max	150max	150max	150max
		Io=0 to 10%	250max	250max	270max	270max
	TEMPERATURE REGULATION[mV]	-20 to +60℃	50max	50max	150max	180max
		-40 to +60℃	80max	80max	240max	290max
	DRIFT[mV]	*4	20max	20max	48max	60max
	START-UP TIME[ms]		30max (Minimum input, Rated load)			
	OUTPUT VOLTAGE ADJUSTMENT RANGE		Fixed (TRM pin open) ±10% adjustable by external VR			
	OUTPUT VOLTAGE SETTING[V]	*5	3.296 - 3.404	4.975 - 5.137	11.857 - 12.243	14.839 - 15.321
PROTECTION CIRCUIT AND OTHERS	OVERCURRENT PROTECTION		Works over 105% of rating and recovers automatically			
	OVERVOLTAGE PROTECTION		Work over 115 to 140% of rating			
	REMOTE ON/OFF		Provided (Negative logic L:ON, H:OFF)			

MODEL		MGFS80483R3	MGFS804805	MGFS804812	MGFS804815
MAX OUTPUT WATTAGE[W]		59.4	80	80.4	81
DC OUTPUT	VOLTAGE[V] *1	3.3	5	12	15
	CURRENT[A]	18	16	6.7	5.4

SPECIFICATIONS

	MODEL		MGFS80483R3	MGFS804805	MGFS804812	MGFS804815
INPUT	VOLTAGE[V]		DC18 - 76 (Surge Voltage 100V, 100ms max)			
	CURRENT[A]	*2	1.35typ	1.80typ	1.78typ	1.80typ
	EFFICIENCY[%]	*2	92typ	93typ	94typ	94typ
OUTPUT	VOLTAGE[V]		3.3	5	12	15
	CURRENT[A]		18	16	6.7	5.4
	LINE REGULATION[mV]		13.2max	20max	48max	60max
	LOAD REGULATION[mV]		20max	20max	48max	60max
	RIPPLE[mVp-p] *3	-20 to +60℃	75max	75max	100max	100max
		-40 to -20℃	100max	100max	120max	120max
		Io=0 to 10%	200max	200max	240max	240max
	RIPPLE NOISE[mVp-p] *3	-20 to +60℃	75max	75max	100max	100max
		-40 to -20℃	150max	150max	150max	150max
		Io=0 to 10%	250max	250max	270max	270max
	TEMPERATURE REGULATION[mV]	-20 to +60℃	50max	50max	150max	180max
		-40 to +60℃	80max	80max	240max	290max
	DRIFT[mV]	*4	20max	20max	48max	60max
	START-UP TIME[ms]		30max (Minimum input, Rated load)			
	OUTPUT VOLTAGE ADJUSTMENT RANGE		Fixed (TRM pin open) ±10% adjustable by external VR			
	OUTPUT VOLTAGE SETTING[V]	*5	3.296 - 3.404	4.975 - 5.137	11.857 - 12.243	14.839 - 15.321
PROTECTION CIRCUIT AND OTHERS	OVERCURRENT PROTECTION		Works over 105% of rating and recovers automatically			
	OVERVOLTAGE PROTECTION		Work over 115 to 140% of rating			
	REMOTE ON/OFF		Provided (Negative logic L:ON, H:OFF)			

GENERAL SPECIFICATIONS

ISOLATION	INPUT-OUTPUT	DC1,500V 1minute, Cutoff current = 10mA, DC500V 1,000MΩ min (20±15℃)
	INPUT-CASE	DC1,000V 1minute, Cutoff current = 10mA, DC500V 1,000MΩ min (20±15℃)
	OUTPUT-CASE	DC1,000V 1minute, Cutoff current = 10mA, DC500V 1,000MΩ min (20±15℃)
ENVIRONMENT	OPERATING TEMP.,HUMID.AND ALTITUDE	-40 to +85℃, 20 to 95%RH (Non condensing) (Required Derating), 5,000m (16,400feet) max
	STORAGE TEMP.,HUMID.AND ALTITUDE	-40 to +100℃, 20 to 95%RH (Non condensing), 9,000m (30,000feet) max
	VIBRATION	10 - 55Hz, 98.0m/s² (10G), 3minutes period, 60minutes each along X, Y and Z axis
	IMPACT	490.3m/s² (50G), 11ms, once each along X, Y and Z axis
SAFETY	AGENCY APPROVALS	UL62368-1, C-UL(CSA62368-1), EN62368-1
OTHERS	CASE SIZE/WEIGHT	25.4×9.9×50.8mm (W×H×D) / 50g max
	COOLING METHOD	Convection/Forced air

*1 MGFW80xx12/MGFW80xx15 is available as single output +24V/+30V
*2 Rated input voltage (DC24V, DC48V) Io=100%
*3 Riple and Ripple Noise is measured by using test board with ceramic capacitor 22μF and Recommended Capacitance at 50mm from output pins. (20MHz Oscilloscope)
*4 Drift is the DC output accuracy for eight hour period after a half-hour warm-up at 25℃
*5 Rated input voltage (DC24V, DC48V), rated output wattage, ambient temperature at 25℃
* Parallel operation with other model is not possible.

External view

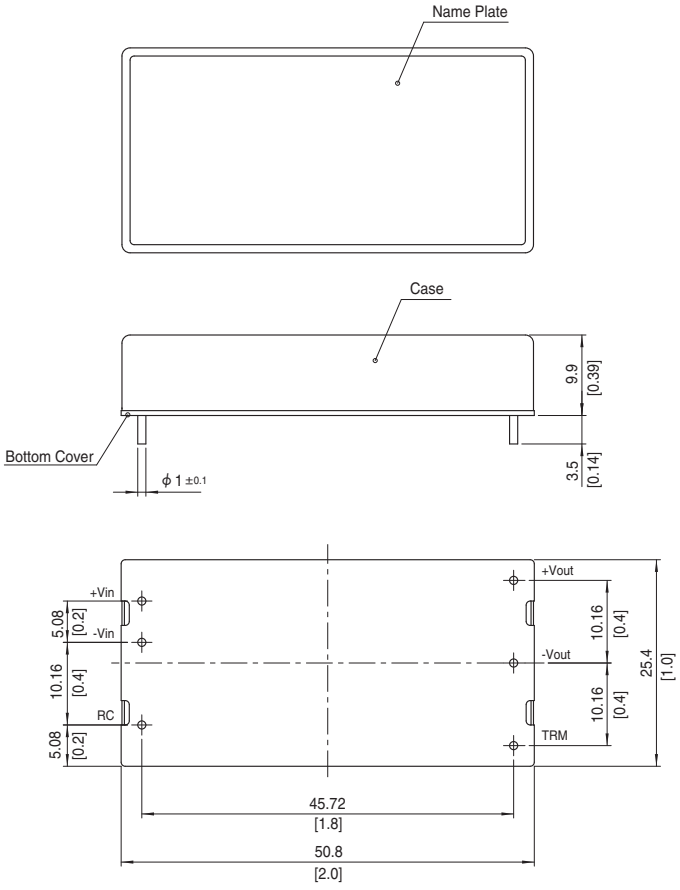

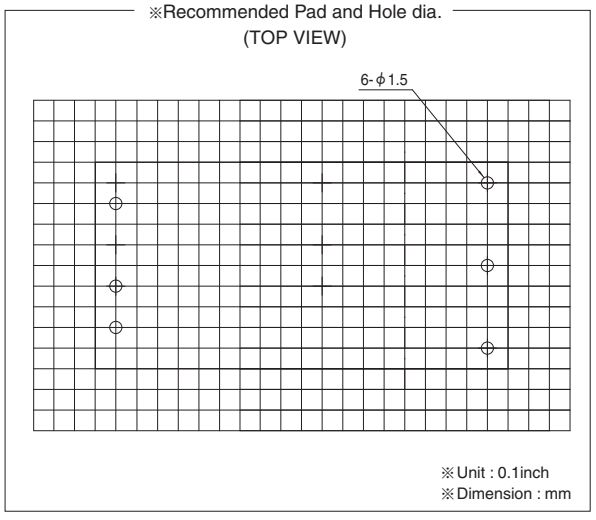

※ Tolerance ±0.5 [±0.02]
※ Dimensions in mm, [ ]=inches
※ Pin terminal material : Copper
※ Plating treatment of terminal : Lead free plating
※ Case material : Brass
※ Plating treatment of case : Nickel plating
※ Bottom Cover : FR4 (t=0.6) [t=0.024]
※ Please keep enough creepage distance with the pattern on PCB and other components.
※ Weight 50g max