COSEL DC-DC Converters PCB Mount Type

MGFW1R5

Ordering information

MGF	W	1R5	24	12	-□
①	②	③	④	⑤	⑥

①Series name
②Dual output
③Output wattage
④Input voltage
⑤Output voltage
⑥Optional

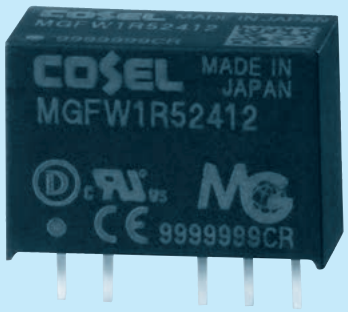

MODEL		MGFW1R52412	MGFW1R52415	MGFW1R54812	MGFW1R54815
MAX OUTPUT WATTAGE[W]		1.56	1.50	1.56	1.50
DC OUTPUT	VOLTAGE[V] *1	±12 or +24	±15 or +30	±12 or +24	±15 or +30
	CURRENT[A]	0.065	0.05	0.065	0.05

SPECIFICATIONS

	MODEL		MGFW1R52412	MGFW1R52415	MGFW1R54812	MGFW1R54815
INPUT	VOLTAGE[V]		DC9 - 36 (Surge voltage 50V, 100ms max)		DC18 - 76 (Surge voltage 100V, 100ms max)	
	CURRENT[A]	*2	0.081typ	0.079typ	0.041typ	0.040typ
	EFFICIENCY[%]	*2	81typ	80typ	81typ	79typ
OUTPUT	VOLTAGE[V]		±12 (+24)	±15 (+30)	±12 (+24)	±15 (+30)
	CURRENT[A]		0.065	0.05	0.065	0.05
	LINE REGULATION[mV]		60max	75max	60max	75max
	LOAD REGULATION[mV]	*3	480max	600max	480max	600max
		*4	600max	750max	600max	750max
	RIPPLE[mVp-p]	*5	150max	150max	150max	150max
	RIPPLE NOISE[mVp-p]	*5	200max	200max	200max	200max
	TEMPERATURE REGULATION[mV]	-20 to +85℃	210max	260max	150max	180max
		-40 to +85℃	320max	390max	240max	290max
	DRIFT[mV]	*6	48max	60max	48max	60max
	START-UP TIME[ms]		30max (Minimum input, Io=100%)			
	OUTPUT VOLTAGE SETTING[V]		11.64 - 12.36	14.55 - 15.45	11.64 - 12.36	14.55 - 15.45
PROTECTION CIRCUIT	OVERCURRENT PROTECTION		Works over 105% of rating and recovers automatically			
ISOLATION	INPUT-OUTPUT		DC1,500V or AC1,000V 1minute, Cutoff current=10mA, DC500V 1,000MΩ min (20±15℃)			
ENVIRONMENT	OPERATING TEMP.,HUMID.AND ALTITUDE		-40 to +85℃, 20 to 95%RH (Non condensing) (Required derating), 5,000m (16,400feet) max			
	STORAGE TEMP.,HUMID.AND ALTITUDE		-40 to +100℃, 20 to 95%RH (Non condensing), 9,000m (30,000feet) max			
	VIBRATION		10 - 55Hz 98.0m/s² (10G), 3minute period, 60minutes each along X, Y and Z axis			
	IMPACT		490.3m/s² (50G) 11ms, once each along X, Y and Z axis			
SAFETY	AGENCY APPROVALS		UL60950-1, C-UL, EN60950-1			
OTHERS	CASE SIZE/WEIGHT		17.0×12.0×8.5mm [0.67×0.48×0.34 inches] (W×H×D) / 4g max			
	COOLING METHOD		Convection/Forced air			

*1 Single output +24V, +30V with no use of COM.
*2 Rated input 24V or 48V DC Io=100%
*3 Symmetrical loading from 20% to 100%.
*4 Symmetrical loading from 0% to 100%.
*5 Ripple and Ripple Noise is measured by using test board with ceramic capacitor 1μF at 50mm from output pins.
*6 Drift is the DC output accuracy for eight hours period after a half-hour warm-up at 25℃.
* Parallel operation with other model is not possible.

External view

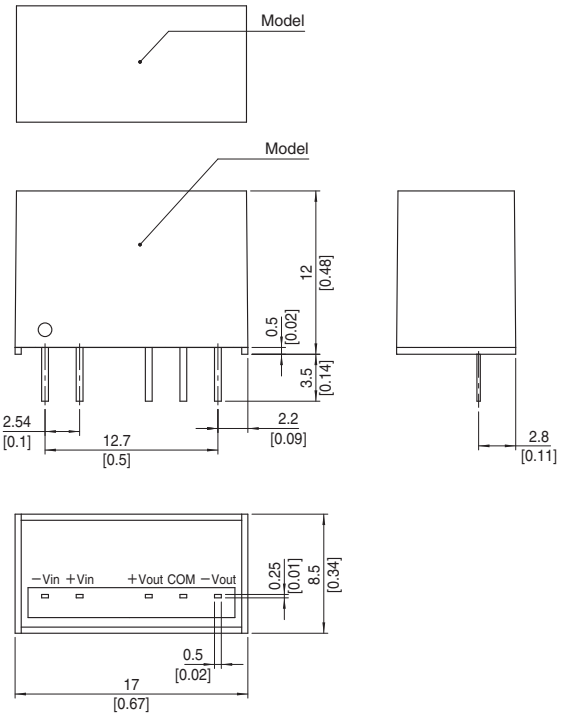

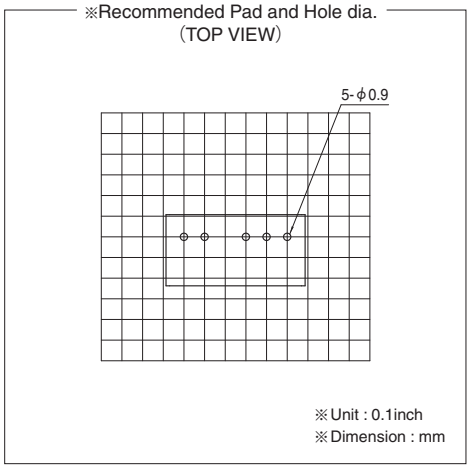

※ Tolerance ±0.5 [±0.02]
※ Dimensions in mm, [ ]= inches
※ Pin terminal material : Copper
※ Planting treatment of terminal : Lead free plating
※ Case material : PBT
※ Weight 4g max

COSEL DC-DC Converters PCB Mount Type

MGFW3

Ordering information

MGF	W	3	24	12	-□
①	②	③	④	⑤	⑥

①Series name
②Dual output
③Output wattage
④Input voltage
⑤Output voltage
⑥Optional

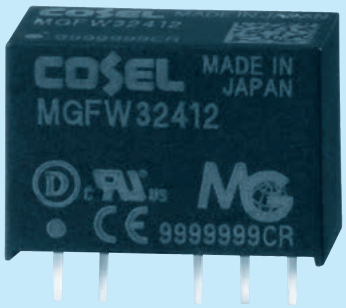

MODEL		MGFW32412	MGFW32415	MGFW34812	MGFW34815
MAX OUTPUT WATTAGE[W]		3.12	3.00	3.12	3.00
DC OUTPUT	VOLTAGE[V] ※1	±12 or +24	±15 or +30	±12 or +24	±15 or +30
	CURRENT[A]	0.13	0.1	0.13	0.1

SPECIFICATIONS

	MODEL		MGFW32412	MGFW32415	MGFW34812	MGFW34815
INPUT	VOLTAGE[V]		DC9 - 36 (Surge voltage 50V,100ms max) (Refer to the instruction manual for input voltage derating.)		DC18 - 76 (Surge voltage 100V,100ms max) (Refer to the instruction manual for input voltage derating.)	
	CURRENT[A]	※2	0.16typ	0.16typ	0.081typ	0.078typ
	EFFICIENCY[%]	※2	82typ	82typ	81typ	81typ
OUTPUT	VOLTAGE[V]		±12 (+24)	±15 (+30)	±12 (+24)	±15 (+30)
	CURRENT[A]		0.13	0.1	0.13	0.1
	LINE REGULATION[mV]		60max	75max	60max	75max
	LOAD REGULATION[mV]	※3	480max	600max	480max	600max
		※4	600max	750max	600max	750max
	RIPPLE[mVp-p]	※5	150max	150max	150max	150max
	RIPPLE NOISE[mVp-p]	※5	200max	200max	200max	200max
	TEMPERATURE REGULATION[mV]	-20 to +70℃	180max	220max	180max	220max
		-40 to +70℃	290max	340max	290max	340max
	DRIFT[mV]	※6	48max	60max	48max	60max
	START-UP TIME[ms]		30max (Minimum input, Io=100%)			
	OUTPUT VOLTAGE SETTING[V]		11.64 - 12.36	14.55 - 15.45	11.64 - 12.36	14.55 - 15.45
PROTECTION CIRCUIT	OVERCURRENT PROTECTION		Works over 105% of rating and recovers automatically			
ISOLATION	INPUT-OUTPUT		DC1,500V or AC1,000V 1minute, Cutoff current=10mA, DC500V 1,000MΩ min (20±15℃)			
ENVIRONMENT	OPERATING TEMP.,HUMID.AND ALTITUDE		-40 to +85℃, 20 to 95%RH (Non condensing) (Required derating), 5,000m (16,400feet) max			
	STORAGE TEMP.,HUMID.AND ALTITUDE		-40 to +100℃, 20 to 95%RH (Non condensing), 9,000m (30,000feet) max			
	VIBRATION		10 - 55Hz 98.0m/s² (10G), 3minute period, 60minutes each along X, Y and Z axis			
	IMPACT		490.3m/s² (50G) 11ms, once each along X, Y and Z axis			
SAFETY	AGENCY APPROVALS		UL60950-1, C-UL, EN60950-1			
OTHERS	CASE SIZE/WEIGHT		17.0×12.0×8.5mm [0.67×0.48×0.34 inches] (W×H×D) / 4g max			
	COOLING METHOD		Convection/Forced air			

※1 Single output +24V, +30V with no use of COM.
※2 Rated input 24V or 48V DC Io=100%
※3 Symmetrical loading from 20% to 100%.
※4 Symmetrical loading from 0% to 100%.
※5 Ripple and Ripple Noise is measured by using test board with ceramic capacitor 1μF at 50mm from output pins.
※6 Drift is the DC output accuracy for eight hours period after a half-hour warm-up at 25℃.
※ Parallel operation with other model is not possible.

External view

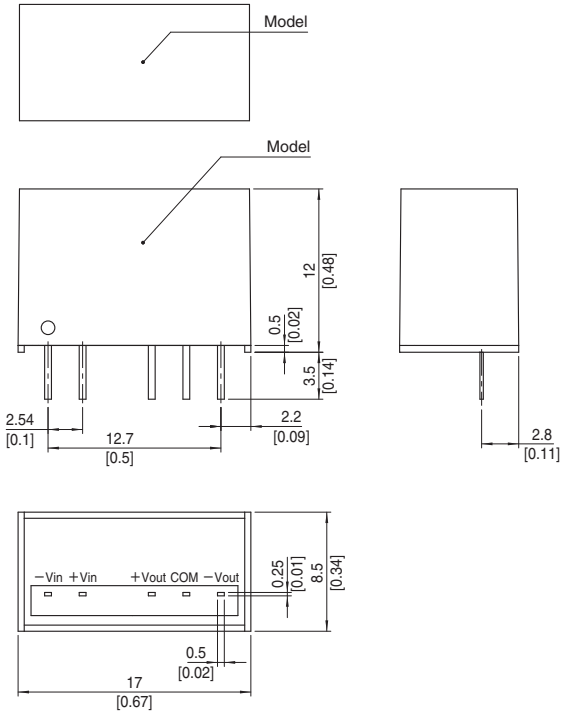

※Recommended Pad and Hole dia.
(TOP VIEW)

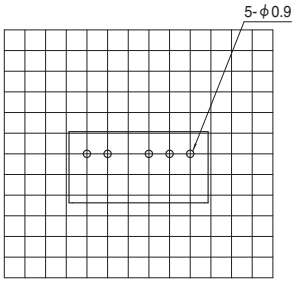

※Unit : 0.1inch
※Dimension : mm

※ Tolerance ±0.5 [±0.02]
※ Dimensions in mm, [ ]= inches
※ Pin terminal material : Copper
※ Planting treatment of terminal : Lead free plating
※ Case material : PBT
※ Weight 4g max

COSEL DC-DC Converters PCB Mount Type

MGFW6

Ordering information

MGF	W	6	24	12	-□
①	②	③	④	⑤	⑧

①Series name
②Dual output
③Output wattage
④Input voltage
⑤Output voltage
⑥Optional
Y2: Output voltage adjustable (+10%, -5%)

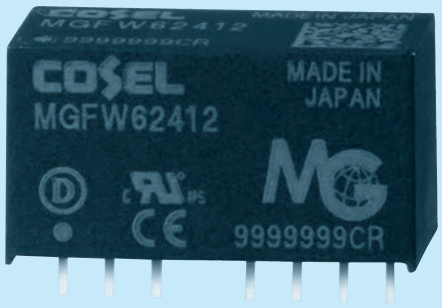

MODEL		MGFW62412	MGFW62415	MGFW64812	MGFW64815
MAX OUTPUT WATTAGE[W]		6.00	6.00	6.00	6.00
DC OUTPUT	VOLTAGE[V] *1	±12 or +24	±15 or +30	±12 or +24	±15 or +30
	CURRENT[A]	0.25	0.2	0.25	0.2

SPECIFICATIONS

	MODEL		MGFW62412	MGFW62415	MGFW64812	MGFW64815
INPUT	VOLTAGE[V]		DC9 - 36 (Surge voltage 50V,100ms max)		DC18 - 76 (Surge voltage 100V,100ms max)	
	CURRENT[A]	*2	0.29typ	0.29typ	0.15typ	0.15typ
	EFFICIENCY[%]	*2	87typ	88typ	88typ	88typ
OUTPUT	VOLTAGE[V]		±12 (+24)	±15 (+30)	±12 (+24)	±15 (+30)
	CURRENT[A]		0.25	0.2	0.25	0.2
	LINE REGULATION[mV]		60max	75max	60max	75max
	LOAD REGULATION[mV]	*3	480max	600max	480max	600max
		*4	600max	750max	600max	750max
	RIPPLE[mVp-p] *5	Po=30% -	120max	120max	120max	120max
		Po=0 - 30%	360max	360max	360max	360max
	RIPPLE NOISE[mVp-p] *5	Po=30% -	200max	200max	200max	200max
		Po=0 - 30%	500max	500max	500max	500max
	TEMPERATURE REGULATION[mV]	-20 to +75℃	190max	230max	190max	230max
		-40 to +75℃	300max	360max	300max	360max
	DRIFT[mV]	*6	48max	60max	48max	60max
	START-UP TIME[ms]		30max (Minimum input, Io=100%)			
	OUTPUT VOLTAGE SETTING[V]		11.64 - 12.36	14.55 - 15.45	11.64 - 12.36	14.55 - 15.45
PROTECTION CIRCUIT AND OTHERS	OVERCURRENT PROTECTION		Works over 105% of rating and recovers automatically			
	REMOTE ON/OFF		Provided (Negative logic L : ON, H : OFF)			
ISOLATION	INPUT-OUTPUT		DC1,500V or AC1,000V 1minute, Cutoff current=10mA, DC500V 1,000MΩ min (20±15℃)			
ENVIRONMENT	OPERATING TEMP.,HUMID.AND ALTITUDE		-40 to +85℃, 20 to 95%RH (Non condensing) (Required derating), 5,000m (16,400feet) max			
	STORAGE TEMP.,HUMID.AND ALTITUDE		-40 to +100℃, 20 to 95%RH (Non condensing), 9,000m (30,000feet) max			
	VIBRATION		10 - 55Hz 98.0m/s² (10G), 3minute period, 60minutes each along X, Y and Z axis			
	IMPACT		490.3m/s² (50G) 11ms, once each along X, Y and Z axis			
SAFETY	AGENCY APPROVALS		UL60950-1, C-UL, EN60950-1			
OTHERS	CASE SIZE/WEIGHT		22.0×12.0×9.5mm [0.87×0.48×0.38 inches] (W×H×D) / 7g max			
	COOLING METHOD		Convection/Forced air			

*1 Single output +24V, +30V with no use of COM.
*2 Rated input 5V, 12V, 24V or 48V DC Io=100%
*3 Symmetrical loading from 20% to 100%.
*4 Symmetrical loading from 0% to 100%.
*5 Ripple and Ripple Noise is measured by using test board with ceramic capacitor 1μF at 50mm from output pins. Po:Output wattage.
*6 Drift is the DC output accuracy for eight hours period after a half-hour warm-up at 25℃.
* Parallel operation with other model is not possible.

External view

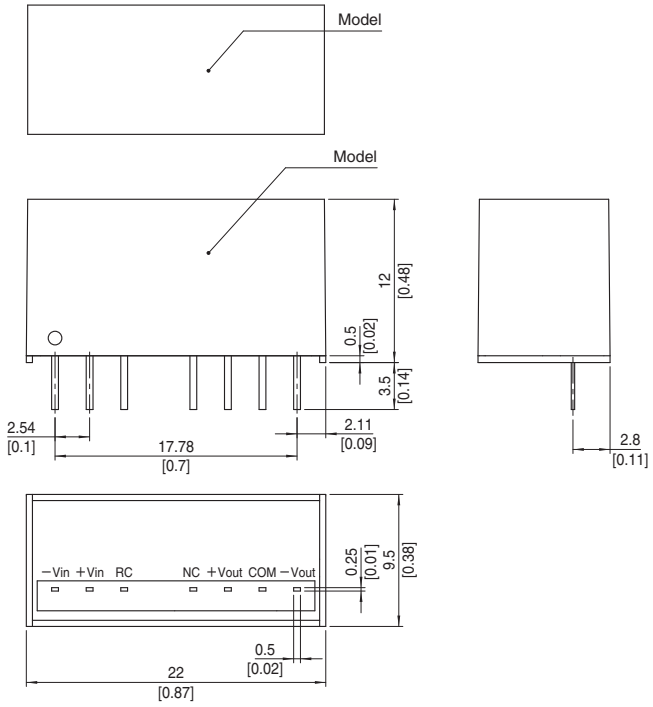

※Recommended Pad and Hole dia.
(TOP VIEW)

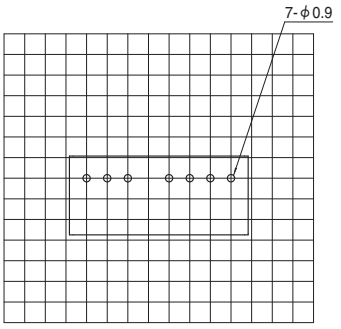

※Unit : 0.1inch
※Dimension : mm

※ Tolerance ±0.5 [±0.02]
※ Dimensions in mm, [ ]= inches
※ Pin terminal material : Copper
※ Planting treatment of terminal : Lead free plating
※ Case material : PBT
※ Weight 7g max

<Pin Configuration (Option : Y2)>

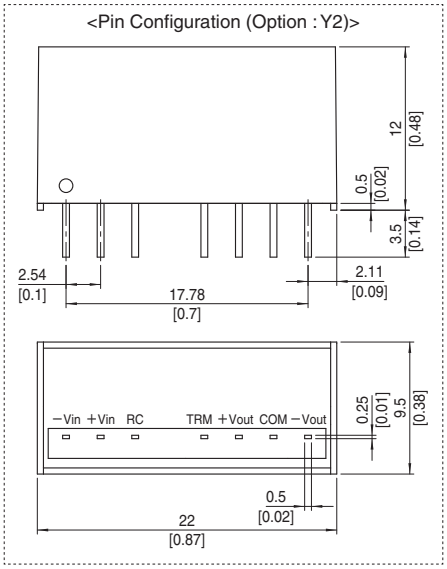

COSEL DC-DC Converters PCB Mount Type

MGFW10

Ordering information

MGF	W	10	24	12	-□
①	②	③	④	⑤	⑧

①Series name
②Dual output
③Output wattage
④Input voltage
⑤Output voltage
⑥Optional
Y2: Output voltage adjustable (+10%, -5%)

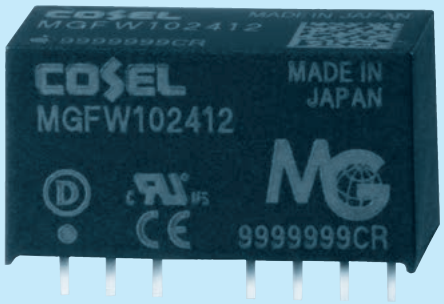

MODEL		MGFW102412	MGFW102415	MGFW104812	MGFW104815
MAX OUTPUT WATTAGE[W]		10.08	10.20	10.08	10.20
DC OUTPUT	VOLTAGE[V] *1	±12 or +24	±15 or +30	±12 or +24	±15 or +30
	CURRENT[A]	0.42	0.34	0.42	0.34

SPECIFICATIONS

	MODEL		MGFW102412	MGFW102415	MGFW104812	MGFW104815
INPUT	VOLTAGE[V]		DC9 - 36 (Surge voltage 50V,100ms max) (Refer to the instruction manual for input voltage derating.)		DC18 - 76 (Surge voltage 100V,100ms max) (Refer to the instruction manual for input voltage derating.)	
	CURRENT[A]	*2	0.49typ	0.49typ	0.25typ	0.25typ
	EFFICIENCY[%]	*2	87typ	87typ	87typ	88typ
OUTPUT	VOLTAGE[V]		±12 (+24)	±15 (+30)	±12 (+24)	±15 (+30)
	CURRENT[A]		0.42	0.34	0.42	0.34
	LINE REGULATION[mV]		60max	75max	60max	75max
	LOAD REGULATION[mV]	*3	480max	600max	480max	600max
		*4	600max	750max	600max	750max
	RIPPLE[mVp-p] *5	Po=30% -	120max	120max	120max	120max
		Po=0 - 30%	360max	360max	360max	360max
	RIPPLE NOISE[mVp-p] *5	Po=30% -	200max	200max	200max	200max
		Po=0 - 30%	500max	500max	500max	500max
	TEMPERATURE REGULATION[mV]	-20 to +50℃	150max	180max	150max	180max
		-40 to +50℃	240max	290max	240max	290max
	DRIFT[mV]	*6	48max	60max	48max	60max
	START-UP TIME[ms]		30max (Minimum input, Io=100%)			
	OUTPUT VOLTAGE SETTING[V]		11.64 - 12.36	14.55 - 15.45	11.64 - 12.36	14.55 - 15.45
PROTECTION CIRCUIT AND OTHERS	OVERCURRENT PROTECTION		Works over 105% of rating and recovers automatically			
	REMOTE ON/OFF		Provided (Negative logic L : ON, H : OFF)			
ISOLATION	INPUT-OUTPUT		DC1,500V or AC1,000V 1minute, Cutoff current=10mA, DC500V 1,000MΩ min (20±15℃)			
ENVIRONMENT	OPERATING TEMP.,HUMID.AND ALTITUDE		-40 to +85℃, 20 to 95%RH (Non condensing) (Required derating), 5,000m (16,400feet) max			
	STORAGE TEMP.,HUMID.AND ALTITUDE		-40 to +100℃, 20 to 95%RH (Non condensing), 9,000m (30,000feet) max			
	VIBRATION		10 - 55Hz 98.0m/s² (10G), 3minute period, 60minutes each along X, Y and Z axis			
	IMPACT		490.3m/s² (50G) 11ms, once each along X, Y and Z axis			
SAFETY	AGENCY APPROVALS		UL60950-1, C-UL, EN60950-1			
OTHERS	CASE SIZE/WEIGHT		22.0×12.0×9.5mm [0.87×0.48×0.38 inches] (WXHXD) / 7g max			
	COOLING METHOD		Convection/Forced air			

*1 Single output +24V, +30V with no use of COM.
*2 Rated input 5V, 12V, 24V or 48V DC Io=100%
*3 Symmetrical loading from 20% to 100%.
*4 Symmetrical loading from 0% to 100%.
*5 Ripple and Ripple Noise is measured by using test board with ceramic capacitor 1μF at 50mm from output pins. Po:Output wattage.
*6 Drift is the DC output accuracy for eight hours period after a half-hour warm-up at 25℃.
* Parallel operation with other model is not possible.

External view

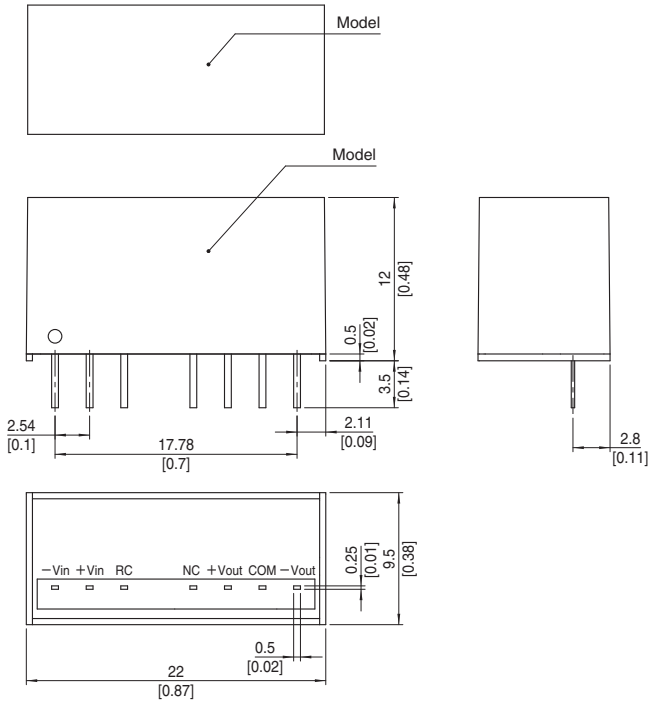

※Recommended Pad and Hole dia.
(TOP VIEW)

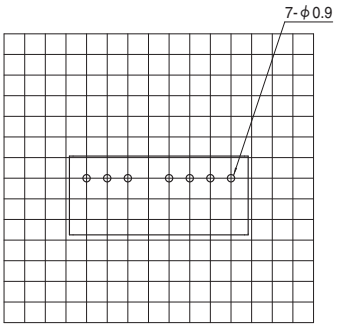

※Unit : 0.1inch
※Dimension : mm

※ Tolerance ±0.5 [±0.02]
※ Dimensions in mm, [ ]= inches
※ Pin terminal material : Copper
※ Planting treatment of terminal : Lead free plating
※ Case material : PBT
※ Weight 7g max

<Pin Configuration (Option : Y2)>

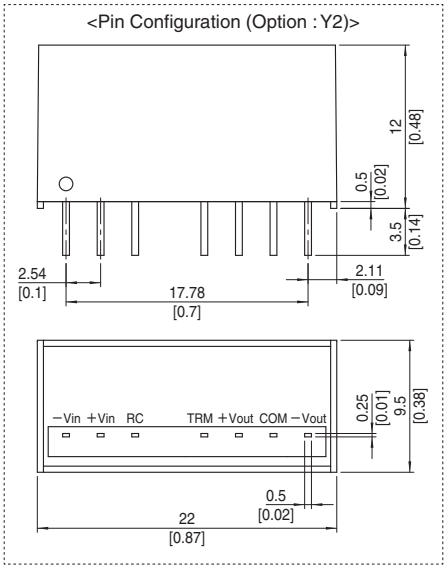

COSEL DC-DC Converters PCB Mount Type

MGFW15

Ordering information

MGF	W	15	24	05	-□
①	②	③	④	⑤	⑥

①Series name
②Dual output
③Output wattage
④Input voltage
⑤Output voltage
⑥Optional
G: Capacitor between Input and Output is removed.
R: with Remote ON/OFF (Positive logic control)



MODEL		MGFW152405	MGFW152412	MGFW152415	MGFW154805	MGFW154812	MGFW154815
MAX OUTPUT WATTAGE[W]		15	15.6	15	15	15.6	15
DC OUTPUT	VOLTAGE[V] *1	±5 or +10	±12 or +24	±15 or +30	±5 or +10	±12 or +24	±15 or +30
	CURRENT[A]	1.5	0.65	0.5	1.5	0.65	0.5

SPECIFICATIONS

	MODEL		MGFW152405	MGFW152412	MGFW152415	MGFW154805	MGFW154812	MGFW154815
INPUT	VOLTAGE[V]		DC9 - 36			DC18 - 76		
	CURRENT[A]	*2	0.74typ	0.74typ	0.70typ	0.37typ	0.37typ	0.36typ
	EFFICIENCY[%]	*2	84typ	88typ	89typ	84typ	87typ	88typ
OUTPUT	VOLTAGE[V]		±5(+10)	±12(+24)	±15(+30)	±5(+10)	±12(+24)	±15(+30)
	CURRENT[A]		1.5	0.65	0.5	1.5	0.65	0.5
	LINE REGULATION[mV]		40max	60max	75max	40max	60max	75max
	LOAD REGULATION[mV]	*3	500max *5	600max	750max	500max *5	600max	750max
		*4	250max	480max	600max	250max	480max	600max
	RIPPLE[mVp-p] *6	-20 to +60℃	100max	100max	100max	100max	100max	100max
		-40 to -20℃	120max	120max	120max	120max	120max	120max
	RIPPLE NOISE[mVp-p] *6	-20 to +60℃	100max	100max	100max	100max	100max	100max
		-40 to -20℃	150max	150max	150max	150max	150max	150max
	TEMPERATURE REGULATION[mV]	-20 to +60℃	50max	150max	180max	50max	150max	180max
		-40 to +60℃	80max	240max	290max	80max	240max	290max
	DRIFT[mV]	*7	50max	50max	60max	50max	50max	60max
	START-UP TIME[ms]		30max (Minimum input, Io=100%)					
	OUTPUT VOLTAGE SETTING[V]	*8	4.935 - 5.240	11.765 - 12.492	14.602 - 15.505	4.935 - 5.240	11.765 - 12.492	14.602 - 15.505
PROTECTION CIRCUIT AND OTHERS	OVERCURRENT PROTECTION		Works over 105% of rating and recovers automatically					
	REMOTE ON/OFF		Provided (Negative logic L:ON, H:OFF)					
ISOLATION	INPUT-OUTPUT		DC1,500V 1minute, Cutoff current = 10mA, DC500V 1,000MΩ min (20±15℃)					
	INPUT-CASE		DC1,000V 1minute, Cutoff current = 10mA, DC500V 1,000MΩ min (20±15℃)					
	OUTPUT-CASE		DC1,000V 1minute, Cutoff current = 10mA, DC500V 1,000MΩ min (20±15℃)					
ENVIRONMENT	OPERATING TEMP.,HUMID.AND ALTITUDE		-40 to +85℃, 20 to 95%RH (Non condensing) (Required Derating), 3,000m (10,000feet) max					
	STORAGE TEMP.,HUMID.AND ALTITUDE		-40 to +100℃, 20 to 95%RH (Non condensing), 9,000m (30,000feet) max					
	VIBRATION		10 - 55Hz, 98.0m/s² (10G), 3minutes period, 60minutes each along X, Y and Z axis					
	IMPACT		490.3m/s² (50G), 11ms, once each along X, Y and Z axis					
SAFETY	AGENCY APPROVALS		UL60950-1, C-UL, EN60950-1					
OTHERS	CASE SIZE/WEIGHT		25.4×9.9×25.4mm [1×0.39×1 inches] (W×H×D) / 20g max					
	COOLING METHOD		Convection/Forced air					

*1 Single output +10V, +24V, +30V with no use of COM.
*2 Rated input 12V, 24V or 48V DC Io=100%
*3 Symmetrical loading from 5% to 100%.
*4 Symmetrical loading from 20% to 100%.
*5 Refer to the instruction manual 11.
*6 Ripple and Ripple Noise is measured by using test board with ceramic capacitor 22μF at 50mm from output pins. (20MHz Osilloscope)
*7 Drift is the DC output accuracy for eight hours period after a half-hour warm-up at 25℃.
*8 Rated input voltage (DC24V, DC48V), rated output wattage, ambient temperature at 25℃.
* Parallel operation with other model is not possible.

External view

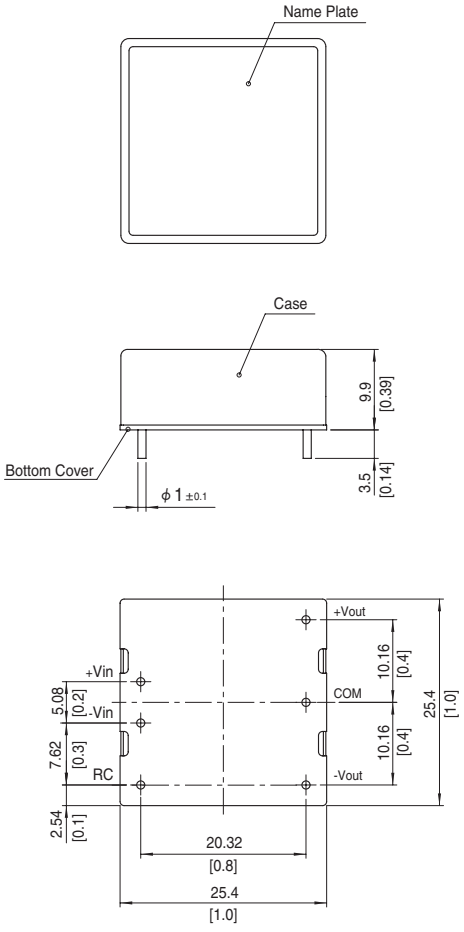

※Recommended Pad and Hole dia.
(TOP VIEW)

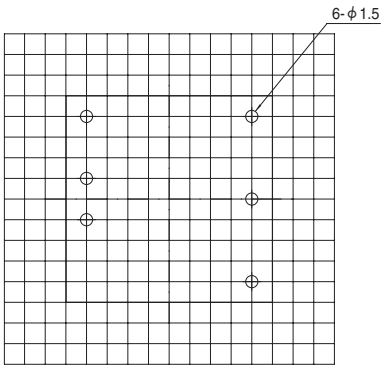

※Unit : 0.1inch
※Dimension : mm

※ Tolerance ±0.5 [±0.02]
※ Dimensions in mm, [ ]=inches
※ Pin terminal material : Copper
※ Plating treatment of terminal : Lead free plating
※ Case material : Brass
※ Plating treatment of case : Nickel plating
※ Bottom Cover : FR4 (t=0.6) [t=0.024]
※ Please keep enough creepage distance with the pattern on PCB and other components.
※ Weight 20g max

COSEL DC-DC Converters PCB Mount Type

MGFW30

Ordering information

MGF	W	30	24	05	-□
①	②	③	④	⑤	⑥



①Series name
②Dual output
③Output wattage
④Input voltage
⑤Output voltage
⑥Optional
G: Capacitor between Input and Output is removed.
R: with Remote ON/OFF (Positive logic control)

MODEL		MGFW302405	MGFW302412	MGFW302415	MGFW304805	MGFW304812	MGFW304815
MAX OUTPUT WATTAGE[W]		20	30	30	20	30	30
DC OUTPUT	VOLTAGE[V] *1	±5 or +10	±12 or +24	±15 or +30	±5 or +10	±12 or +24	±15 or +30
	CURRENT[A]	2	1.25	1	2	1.25	1

SPECIFICATIONS

	MODEL		MGFW302405	MGFW302412	MGFW302415	MGFW304805	MGFW304812	MGFW304815
INPUT	VOLTAGE[V]		DC9 - 36			DC18 - 76		
	CURRENT[A]	*2	0.98typ	1.42typ	1.44typ	0.49typ	0.71typ	0.72typ
	EFFICIENCY[%]	*2	85typ	88typ	87typ	85typ	88typ	87typ
OUTPUT	VOLTAGE[V]		±5(+10)	±12(+24)	±15(+30)	±5(+10)	±12(+24)	±15(+30)
	CURRENT[A]		2	1.25	1	2	1.25	1
	LINE REGULATION[mV]		40max	60max	75max	40max	60max	75max
	LOAD REGULATION[mV]	*3	500max *5	600max	750max	500max *5	600max	750max
		*4	250max	480max	600max	250max	480max	600max
	RIPPLE[mVp-p] *6	-20 to +60℃	100max	100max	100max	100max	100max	100max
		-40 to -20℃	120max	120max	120max	120max	120max	120max
	RIPPLE NOISE[mVp-p] *6	-20 to +60℃	100max	100max	100max	100max	100max	100max
		-40 to -20℃	150max	150max	150max	150max	150max	150max
	TEMPERATURE REGULATION[mV]	-20 to +60℃	50max	150max	180max	50max	150max	180max
		-40 to +60℃	80max	240max	290max	80max	240max	290max
	DRIFT[mV]	*7	50max	50max	60max	50max	50max	60max
	START-UP TIME[ms]		30max (Minimum input, Io=100%)					
	OUTPUT VOLTAGE SETTING[V]	*8	4.935 - 5.240	11.765 - 12.492	14.602 - 15.505	4.935 - 5.240	11.765 - 12.492	14.602 - 15.505
PROTECTION CIRCUIT AND OTHERS	OVERCURRENT PROTECTION		Works over 105% of rating and recovers automatically					
	OVERVOLTAGE PROTECTION		Works over 120 to 160% of rating (Total of +V and -V)					
	REMOTE ON/OFF		Provided (Negative logic L:ON, H:OFF)					
ISOLATION	INPUT-OUTPUT		DC1,500V 1minute, Cutoff current = 10mA, DC500V 1,000MΩ min (20±15℃)					
	INPUT-CASE		DC1,000V 1minute, Cutoff current = 10mA, DC500V 1,000MΩ min (20±15℃)					
	OUTPUT-CASE		DC1,000V 1minute, Cutoff current = 10mA, DC500V 1,000MΩ min (20±15℃)					
ENVIRONMENT	OPERATING TEMP.,HUMID.AND ALTITUDE		-40 to +85℃, 20 to 95%RH (Non condensing) (Required Derating), 3,000m (10,000feet) max					
	STORAGE TEMP.,HUMID.AND ALTITUDE		-40 to +100℃, 20 to 95%RH (Non condensing), 9,000m (30,000feet) max					
	VIBRATION		10 - 55Hz, 98.0m/s² (10G), 3minutes period, 60minutes each along X, Y and Z axis					
	IMPACT		490.3m/s² (50G), 11ms, once each along X, Y and Z axis					
SAFETY	AGENCY APPROVALS		UL60950-1, C-UL, EN60950-1					
OTHERS	CASE SIZE/WEIGHT		25.4×9.9×50.8mm [1×0.39×2 inches] (W×H×D) / 40g max					
	COOLING METHOD		Convection/Forced air					

*1 Single output +10V, +24V, +30V with no use of COM.
*2 Rated input 12V, 24V or 48V DC Io=100%
*3 Symmetrical loading from 5% to 100%.
*4 Symmetrical loading from 20% to 100%.
*5 Refer to the instruction manual 11.
*6 Ripple and Ripple Noise is measured by using test board with ceramic capacitor 22μF at 50mm from output pins. (20MHz Osilloscope)
*7 Drift is the DC output accuracy for eight hours period after a half-hour warm-up at 25℃.
*8 Rated input voltage (DC24V, DC48V), rated output wattage, ambient temperature at 25℃.
* Parallel operation with other model is not possible.

External view

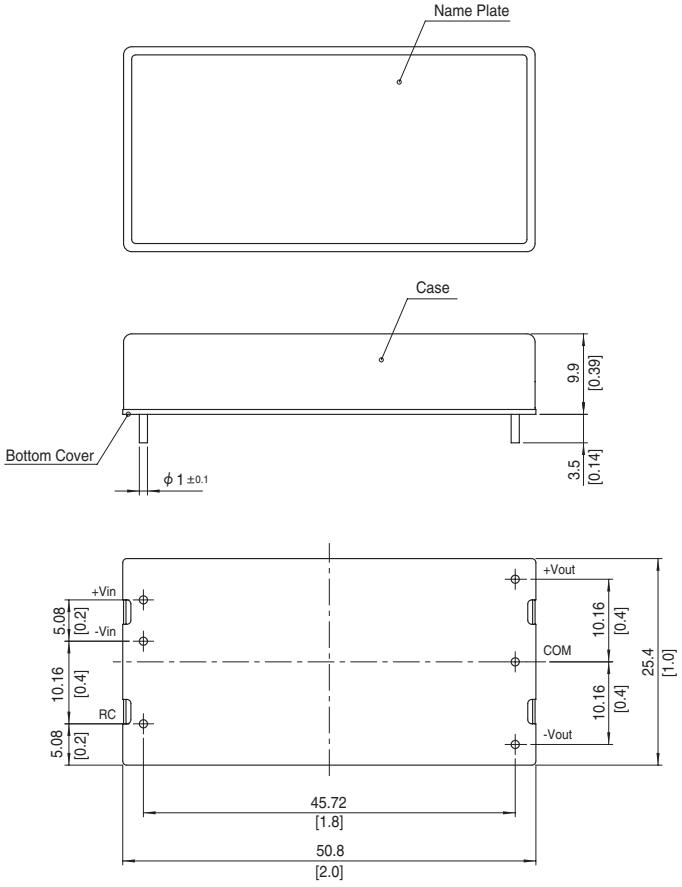

※Recommended Pad and Hole dia.
(TOP VIEW)

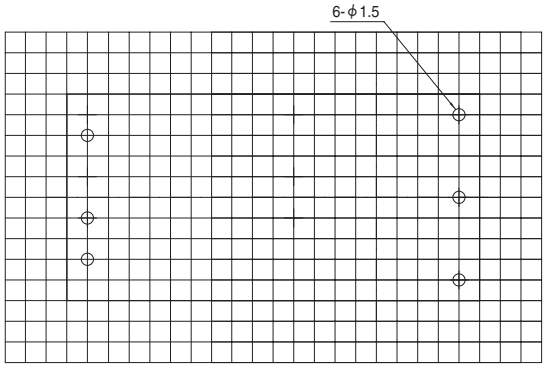

※Unit : 0.1inch
※Dimension : mm

※ Tolerance ±0.5 [±0.02]
※ Dimensions in mm, [ ]=inches
※ Pin terminal material : Copper
※ Plating treatment of terminal : Lead free plating
※ Case material : Brass
※ Plating treatment of case : Nickel plating
※ Bottom Cover : FR4 (t=0.6) [t=0.024]
※ Please keep enough creepage distance with the pattern on PCB and other components.
※ Weight 40g max

COSEL DC-DC Converters PCB Mount Type

MGFW40

Ordering information

MGF	W	40	24	12	-□
①	②	③	④	⑤	⑥

①Series name
②Dual output
③Output wattage
④Input voltage
⑤Output voltage
⑥Optional
G: Capacitor between Input and Output is removed.
R: with Remote ON/OFF (Positive logic control)



MODEL		MGFW400512	MGFW400515	MGFW402412	MGFW402415	MGFW404812	MGFW404815
MAX OUTPUT WATTAGE[W]		31.2	30	40.8	42	40.8	42
DC OUTPUT	VOLTAGE[V] *1	±12 or +24	±15 or +30	±12 or +24	±15 or +30	±12 or +24	±15 or +30
	CURRENT[A]	1.3	1	1.7	1.4	1.7	1.4

SPECIFICATIONS

	MODEL		MGFW400512	MGFW400515	MGFW402412	MGFW402415	MGFW404812	MGFW404815
INPUT	VOLTAGE[V]		DC4.5 - 13 (Surge Voltage 15V, 100ms max)		DC9 - 36 (Surge Voltage 50V, 100ms max)		DC18 - 76 (Surge Voltage 100V, 100ms max)	
	CURRENT[A]	*2	7.26typ	6.90typ	1.87typ	1.92typ	0.93typ	0.96typ
	EFFICIENCY[%]	*2	86typ	87typ	91typ	91typ	91typ	91typ
OUTPUT	VOLTAGE[V]		±12(+24)	±15(+30)	±12(+24)	±15(+30)	±12(+24)	±15(+30)
	CURRENT[A]		1.3	1	1.7	1.4	1.7	1.4
	LINE REGULATION[mV]		60max	75max	60max	75max	60max	75max
	LOAD REGULATION[mV]	*3	600max	750max	600max	750max	600max	750max
		*4	480max	600max	480max	600max	480max	600max
	RIPPLE[mVp-p] *5	-20 to +60℃	100max	100max	100max	100max	100max	100max
		-40 to -20℃	120max	120max	120max	120max	120max	120max
	RIPPLE NOISE[mVp-p] *5	-20 to +60℃	100max	100max	100max	100max	100max	100max
		-40 to -20℃	150max	150max	150max	150max	150max	150max
	TEMPERATURE REGULATION[mV]	-20 to +60℃	150max	180max	150max	180max	150max	180max
		-40 to +60℃	240max	290max	240max	290max	240max	290max
	DRIFT[mV]	*6	50max	60max	50max	60max	50max	60max
	START-UP TIME[ms]		30max (Minimum input, Rated load)					
	OUTPUT VOLTAGE SETTING[V]	*7	11.765 - 12.492	14.602 - 15.505	11.765 - 12.492	14.602 - 15.505	11.765 - 12.492	14.602 - 15.505
PROTECTION CIRCUIT AND OTHERS	OVERCURRENT PROTECTION		Works over 105% of rating and recovers automatically					
	OVERVOLTAGE PROTECTION		Work over 115 to 140% of rating (Total of +Vo and -Vo)					
	REMOTE ON/OFF		Provided (Negative logic L:ON, H:OFF)					
ISOLATION	INPUT-OUTPUT		DC1,500V 1minute, Cutoff current = 10mA, DC500V 1,000MΩ min (20±15℃)					
	INPUT-CASE		DC1,000V 1minute, Cutoff current = 10mA, DC500V 1,000MΩ min (20±15℃)					
	OUTPUT-CASE		DC1,000V 1minute, Cutoff current = 10mA, DC500V 1,000MΩ min (20±15℃)					
ENVIRONMENT	OPERATING TEMP.,HUMID.AND ALTITUDE		-40 to +85℃, 20 to 95%RH (Non condensing) (Required Derating), 5,000m (16,400feet) max					
	STORAGE TEMP.,HUMID.AND ALTITUDE		-40 to +100℃, 20 to 95%RH (Non condensing), 9,000m (30,000feet) max					
	VIBRATION		10 - 55Hz, 98.0m/s² (10G), 3minutes period, 60minutes each along X, Y and Z axis					
	IMPACT		490.3m/s² (50G), 11ms, once each along X, Y and Z axis					
SAFETY	AGENCY APPROVALS		UL62368-1, C-UL (CSA62368-1), EN62368-1					
OTHERS	CASE SIZE/WEIGHT		25.4×9.9×25.4mm (W×H×D) / 30g max					
	COOLING METHOD		Convection/Forced air					

*1 Single output +24V/+30V with no use of COM
*2 Rated input voltage(DC5V , DC24V, DC48V) Io=100%
*3 Symmetrical loading from 0% to 100%
*4 Symmetrical loading from 20% to 100%
*5 Riple and Ripple Noise is measured by using test board with ceramic capacitor 22μF and Recommended Capacitance at 50mm from output pins. (20MHz Oscilloscope)
*6 Drift is the DC output accuracy for eight hour period after a half-hour warm-up at 25℃
*7 Rated input voltage (DC5V, DC24V, DC48V), rated output wattage, ambient temperature at 25℃
* Parallel operation with other model is not possible.

External view

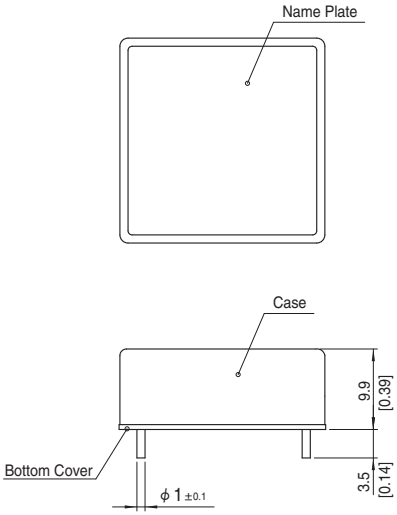

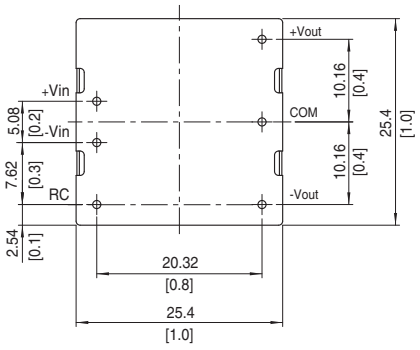

※Recommended Pad and Hole dia.
(TOP VIEW)

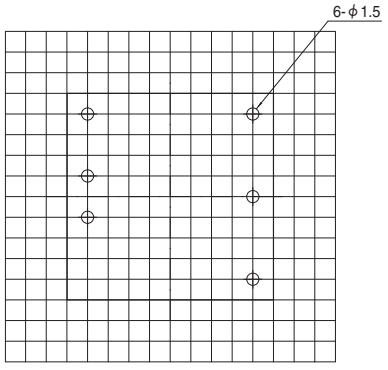

※Unit : 0.1inch
※Dimension : mm

※ Tolerance ±0.5 [±0.02]
※ Dimensions in mm, [ ]=inches
※ Pin terminal material : Copper
※ Plating treatment of terminal : Lead free plating
※ Case material : Brass
※ Plating treatment of case : Nickel plating
※ Bottom Cover : FR4 (t=0.6) [t=0.024]
※ Please keep enough creepage distance with the pattern on PCB and other components.
※ Weight 30g max

COSEL DC-DC Converters PCB Mount Type

MGFW80

Ordering information

MGF	W	80	24	12	-□
①	②	③	④	⑤	⑥

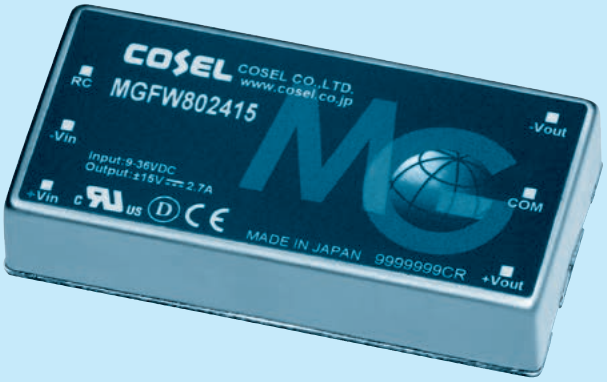

①Series name
②Dual output
③Output wattage
④Input voltage
⑤Output voltage
⑥Optional
G: Capacitor between Input and Output is removed.
R: with Remote ON/OFF (Positive logic control)

MODEL			MGFW802412	MGFW802415	MGFW804812	MGFW804815
MAX OUTPUT WATTAGE[W]			81.6	81	81.6	81
DC OUTPUT	VOLTAGE[V]	*1	±12 or +24	±15 or +30	±12 or +24	±15 or +30
	CURRENT[A]		3.4	2.7	3.4	2.7

SPECIFICATIONS

	MODEL		MGFW802412	MGFW802415	MGFW804812	MGFW804815
INPUT	VOLTAGE[V]		DC9 - 36 (Surge Voltage 50V, 100ms max)		DC18 - 76 (Surge Voltage 100V, 100ms max)	
	CURRENT[A]	*2	3.62typ	3.59typ	1.81typ	1.80typ
	EFFICIENCY[%]	*2	94typ	94typ	94typ	94typ
OUTPUT	VOLTAGE[V]		±12 or +24	±15 or +30	±12 or +24	±15 or +30
	CURRENT[A]		3.4	2.7	3.4	2.7
	LINE REGULATION[mV]		60max	75max	60max	75max
	LOAD REGULATION[mV]	*3	600max	750max	600max	750max
		*4	480max	600max	480max	600max
	RIPPLE[mVp-p] *5	-20 to +60℃	100max	100max	100max	100max
		-40 to -20℃	120max	120max	120max	120max
		Io=0 to 10%	240max	240max	240max	240max
	RIPPLE NOISE[mVp-p] *5	-20 to +60℃	100max	100max	100max	100max
		-40 to -20℃	150max	150max	150max	150max
		Io=0 to 10%	270max	270max	270max	270max
	TEMPERATURE REGULATION[mV]	-20 to +60℃	150max	180max	150max	180max
		-40 to +60℃	240max	290max	240max	290max
	DRIFT[mV]	*6	50max	60max	50max	60max
	START-UP TIME[ms]		30max (Minimum input, Rated load)			
	OUTPUT VOLTAGE SETTING[V]	*7	11.765 - 12.492	14.602 - 15.505	11.765 - 12.492	14.602 - 15.505
PROTECTION CIRCUIT AND OTHERS	OVERCURRENT PROTECTION		Works over 105% of rating and recovers automatically			
	OVERVOLTAGE PROTECTION		Work over 115 to 140% of rating (Total of +Vo and -Vo)			
	REMOTE ON/OFF		Provided (Negative logic L:ON, H:OFF)			
ISOLATION	INPUT-OUTPUT		DC1,500V 1minute, Cutoff current = 10mA, DC500V 1,000MΩ min (20±15℃)			
	INPUT-CASE		DC1,000V 1minute, Cutoff current = 10mA, DC500V 1,000MΩ min (20±15℃)			
	OUTPUT-CASE		DC1,000V 1minute, Cutoff current = 10mA, DC500V 1,000MΩ min (20±15℃)			
ENVIRONMENT	OPERATING TEMP.,HUMID.AND ALTITUDE		-40 to +85℃, 20 to 95%RH (Non condensing) (Required Derating), 5,000m (16,400feet) max			
	STORAGE TEMP.,HUMID.AND ALTITUDE		-40 to +100℃, 20 to 95%RH (Non condensing), 9,000m (30,000feet) max			
	VIBRATION		10 - 55Hz, 98.0m/s² (10G), 3minutes period, 60minutes each along X, Y and Z axis			
	IMPACT		490.3m/s² (50G), 11ms, once each along X, Y and Z axis			
SAFETY	AGENCY APPROVALS		UL62368-1, C-UL (CSA62368-1), EN62368-1			
OTHERS	CASE SIZE/WEIGHT		25.4×9.9×50.8mm (W×H×D) / 50g max			
	COOLING METHOD		Convection/Forced air			

*1 Single output +24V/+30V with no use of COM
*2 Rated input voltage(DC24V, DC48V) Io=100%
*3 Symmetrical loading from 0% to 100%
*4 Symmetrical loading from 20% to 100%
*5 Riple and Ripple Noise is measured by using test board with ceramic capacitor 22μF and Recommended Capacitance at 50mm from output pins. (20MHz Oscilloscope)
*6 Drift is the DC output accuracy for eight hour period after a half-hour warm-up at 25℃
*7 Rated input voltage (DC24V, DC48V), rated output wattage, ambient temperature at 25℃
* Parallel operation with other model is not possible.

External view

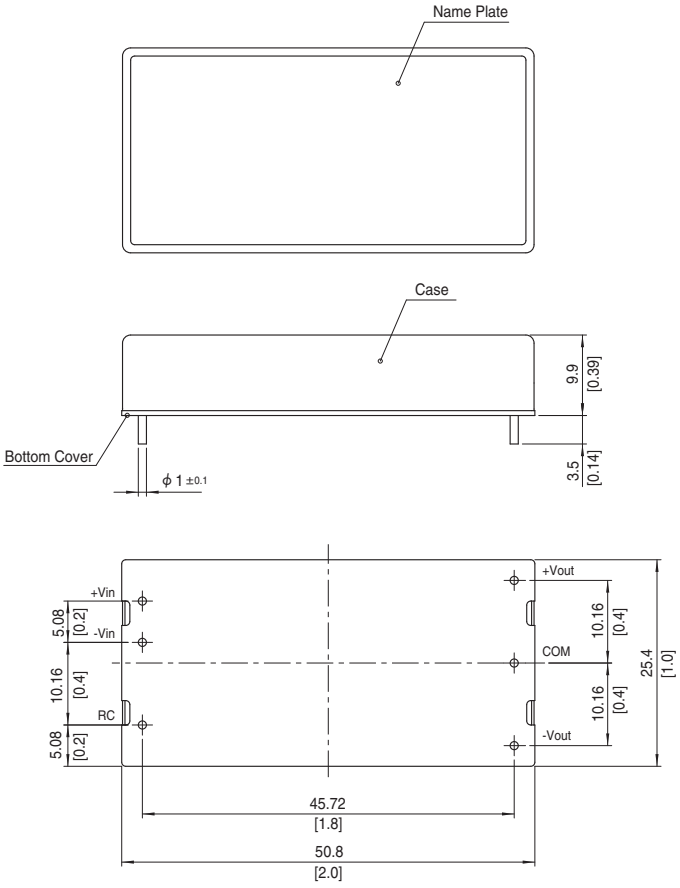

※Recommended Pad and Hole dia.
(TOP VIEW)

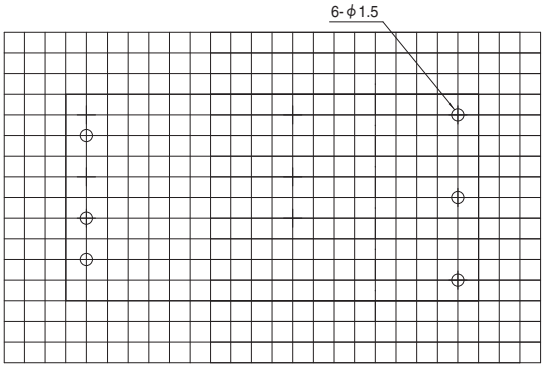

※Unit : 0.1inch
※Dimension : mm

※ Tolerance ±0.5 [±0.02]
※ Dimensions in mm, [ ]=inches
※ Pin terminal material : Copper
※ Plating treatment of terminal : Lead free plating
※ Case material : Brass
※ Plating treatment of case : Nickel plating
※ Bottom Cover : FR4 (t=0.6) [t=0.024]
※ Please keep enough creepage distance with the pattern on PCB and other components.
※ Weight 50g max