Low Profile | Isolated | Safety Approvals | OCP | OVP | Remote ON/OFF | Wide 4 :1 input | Ultra wide 10 : 1 input

MG-series

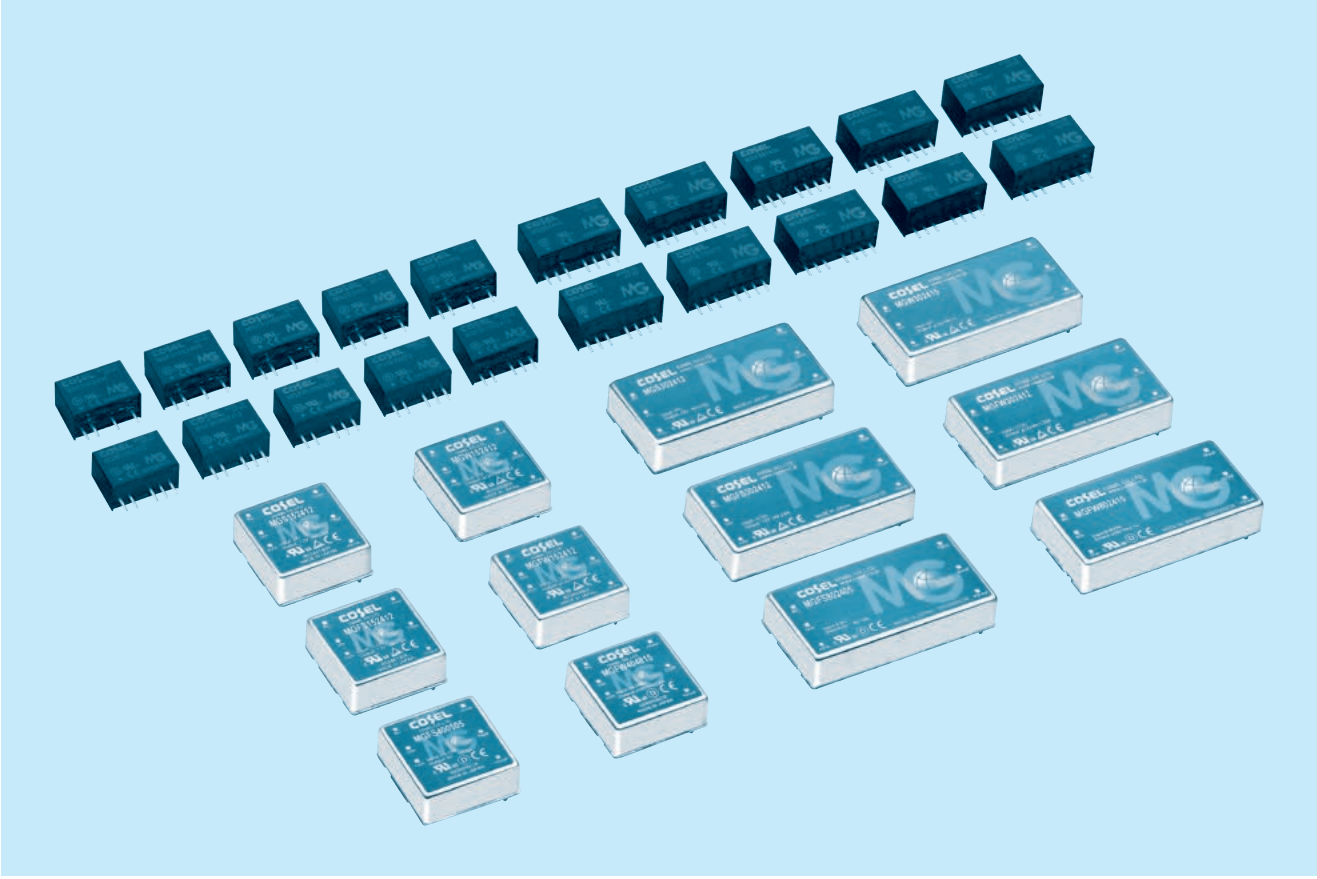

Feature

Industry Standard SIP6 (MG1R5/MG3), SIP8 (MG6/MG10), 1"×1" (MG15/MG40), 1"×2" (MG30/MG80)
Wide input range DC4.5-13V/DC9-36V/DC18-76V (MGFS/MGFW)
Ultra wide input range DC6-60V (MGXS/MGXW)
High efficiency by synchronized rectification circuit (MGS10/MGFS10/MGS15/MGFS15/MGS30/MGFS30/MGFS40/MGFW40/MGFS80/MGFW80)
6 sided shield (MG15/MG30/MG40/MG80)
I/O isolation voltage DC1,500V (1 minute)
Built-in overcurrent protection circuits (recovers automatically)
Built-in overvoltage protection circuits (MG30/MG40/MG80)
Built-in remote ON/OFF (MG6/MG10/MG15/MG30/MG40/MG80)
Output voltage adjustability by external variable resistor (MGS15/MGFS15/MGS30/MGFS30/MGFS40/MGFS80)
High reliability : not built-in aluminum and tantalum electrolytic capacitor

CE marking

Low Voltage Directive
RoHS Directive

UKCA marking

Electrical Equipment Safety Regulations
RoHS Regulations

Safety agency approvals

UL60950-1, C-UL, EN62368-1 (MG1R5/MG3/MG6/MG10/MG15/MG30)
UL62368-1, C-UL, EN62368-1 (MG40/MG80)

10-year warranty

Refer to the instruction manual

COSEL DC-DC Converters PCB Mount Type

MGS1R5

Ordering information

MG	S	1R5	24	05	-□
①	②	③	④	⑤	⑥

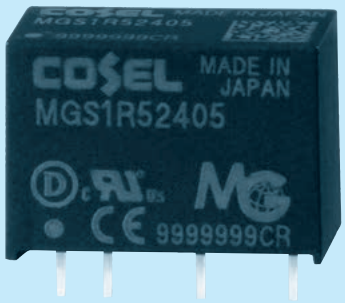

①Series name
②Single output
③Output wattage
④Input voltage
⑤Output voltage
⑥Optional
Y2: Output voltage adjustable (+10%, -5%)

MODEL		MGS1R5053R3	MGS1R50505	MGS1R50512	MGS1R50515	MGS1R5123R3	MGS1R51205	MGS1R51212	MGS1R51215
MAX OUTPUT WATTAGE[W]		1.32	1.50	1.56	1.50	1.32	1.50	1.56	1.50
DC OUTPUT	VOLTAGE[V]	3.3	5	12	15	3.3	5	12	15
	CURRENT[A]	0.4	0.3	0.13	0.1	0.4	0.3	0.13	0.1

SPECIFICATIONS

	MODEL		MGS1R5053R3	MGS1R50505	MGS1R50512	MGS1R50515	MGS1R5123R3	MGS1R51205	MGS1R51212	MGS1R51215
INPUT	VOLTAGE[V]		DC4.5 - 9 (Surge voltage 12.5V, 100ms max)				DC9 - 18 (Surge voltage 25V, 100ms max)			
	CURRENT[A]	*1	0.33typ	0.37typ	0.37typ	0.36typ	0.14typ	0.15typ	0.16typ	0.15typ
	EFFICIENCY[%]	*1	80typ	82typ	85typ	84typ	80typ	83typ	84typ	84typ
OUTPUT	VOLTAGE[V]		3.3	5	12	15	3.3	5	12	15
	CURRENT[A]		0.4	0.3	0.13	0.1	0.4	0.3	0.13	0.1
	LINE REGULATION[mV]		20max	20max	48max	60max	20max	20max	48max	60max
	LOAD REGULATION[mV]		20max	20max	48max	60max	20max	20max	48max	60max
	RIPPLE[mVp-p]	*2	120max	120max	150max	150max	120max	120max	150max	150max
	RIPPLE NOISE[mVp-p]	*2	200max	200max	200max	200max	200max	200max	200max	200max
	TEMPERATURE REGULATION[mV]	-20 to +85℃	50max	50max	150max	180max	50max	50max	150max	180max
		-40 to +85℃	80max	80max	240max	290max	80max	80max	240max	290max
	DRIFT[mV]	*3	20max	20max	48max	60max	20max	20max	48max	60max
	START-UP TIME[ms]		30max (Minimum input, Io=100%)							
	OUTPUT VOLTAGE SETTING[V]		3.21 - 3.42	4.90 - 5.21	11.64 - 12.36	14.55 - 15.45	3.21 - 3.42	4.90 - 5.21	11.64 - 12.36	14.55 - 15.45
PROTECTION CIRCUIT	OVERCURRENT PROTECTION		Works over 105% of rating and recovers automatically							

MODEL		MGS1R5243R3	MGS1R52405	MGS1R52412	MGS1R52415	MGS1R5483R3	MGS1R54805	MGS1R54812	MGS1R54815
MAX OUTPUT WATTAGE[W]		1.32	1.50	1.56	1.50	1.32	1.50	1.56	1.50
DC OUTPUT	VOLTAGE[V]	3.3	5	12	15	3.3	5	12	15
	CURRENT[A]	0.4	0.3	0.13	0.1	0.4	0.3	0.13	0.1

SPECIFICATIONS

	MODEL		MGS1R5243R3	MGS1R52405	MGS1R52412	MGS1R52415	MGS1R5483R3	MGS1R54805	MGS1R54812	MGS1R54815
INPUT	VOLTAGE[V]		DC18 - 36 (Surge voltage 50V, 100ms max)				DC36 - 76 (Surge voltage 100V, 100ms max)			
	CURRENT[A]	*1	0.071typ	0.079typ	0.080typ	0.077typ	0.036typ	0.040typ	0.040typ	0.039typ
	EFFICIENCY[%]	*1	78typ	80typ	82typ	82typ	77typ	80typ	82typ	82typ
OUTPUT	VOLTAGE[V]		3.3	5	12	15	3.3	5	12	15
	CURRENT[A]		0.4	0.3	0.13	0.1	0.4	0.3	0.13	0.1
	LINE REGULATION[mV]		20max	20max	48max	60max	20max	20max	48max	60max
	LOAD REGULATION[mV]		20max	20max	48max	60max	20max	20max	48max	60max
	RIPPLE[mVp-p]	*2	120max	120max	150max	150max	120max	120max	150max	150max
	RIPPLE NOISE[mVp-p]	*2	200max	200max	200max	200max	200max	200max	200max	200max
	TEMPERATURE REGULATION[mV]	-20 to +85℃	50max	50max	150max	180max	50max	50max	150max	180max
		-40 to +85℃	80max	80max	240max	290max	80max	80max	240max	290max
	DRIFT[mV]	*3	20max	20max	48max	60max	20max	20max	48max	60max
	START-UP TIME[ms]		30max (Minimum input, Io=100%)							
	OUTPUT VOLTAGE SETTING[V]		3.21 - 3.42	4.90 - 5.21	11.64 - 12.36	14.55 - 15.45	3.21 - 3.42	4.90 - 5.21	11.64 - 12.36	14.55 - 15.45
PROTECTION CIRCUIT	OVERCURRENT PROTECTION		Works over 105% of rating and recovers automatically							

GENERAL SPECIFICATIONS

ISOLATION	INPUT-OUTPUT	DC1,500V or AC1,000V 1minute, Cutoff current=10mA, DC500V 1,000MΩ min (20±15℃)
ENVIRONMENT	OPERATING TEMP.,HUMID.AND ALTITUDE	-40 to +85℃, 20 to 95%RH (Non condensing) (Refer to "Derating"), 5,000m (16,400feet) max
	STORAGE TEMP.,HUMID.AND ALTITUDE	-40 to +100℃, 20 to 95%RH (Non condensing), 9,000m (30,000feet) max
	VIBRATION	10 - 55Hz 98.0m/s² (10G), 3minute period, 60minutes each along X, Y and Z axis
	IMPACT	490.3m/s² (50G) 11ms, once each along X, Y and Z axis
SAFETY	AGENCY APPROVALS	UL60950-1, C-UL, EN62368-1
OTHERS	CASE SIZE/WEIGHT	17.0×12.0×8.5mm [0.67×0.48×0.34 inches] (W×H×D) / 4g max
	COOLING METHOD	Convection/Forced air

*1 Rated input 5V, 12V, 24V or 48V DC Io=100%
*2 Ripple and ripple noise is measured by using test board with ceramic capacitor 1μF at 50mm from output pins.
*3 Drift is the DC output accuracy for eight hours period after a half-hour warm-up at 25℃.
* Parallel operation with other model is not possible.
* MGW1R5xx12/MGW1R5xx15 is available as single output, +24V/+30V

External view

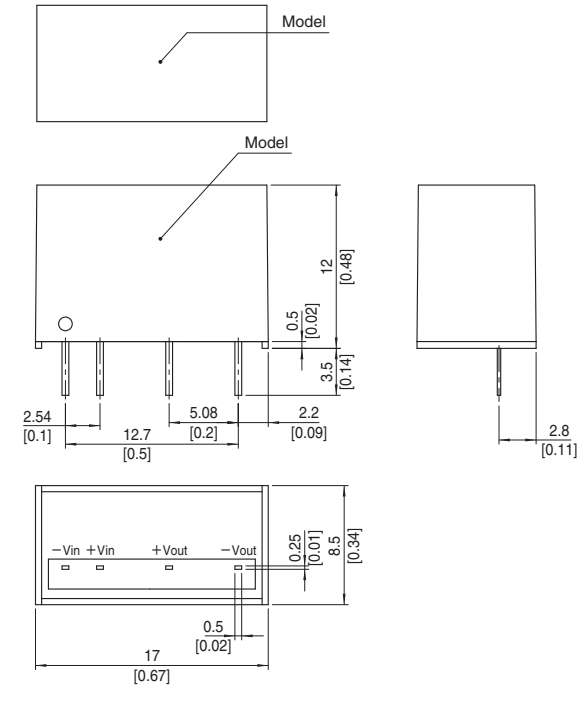

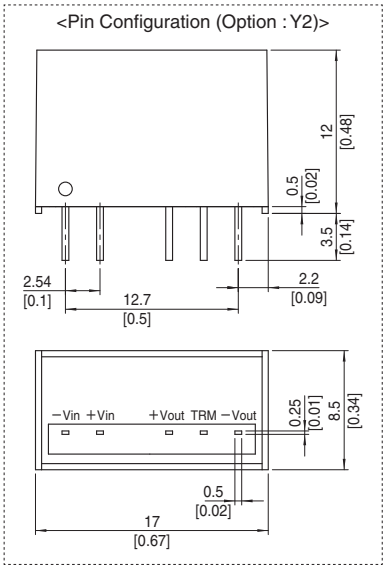

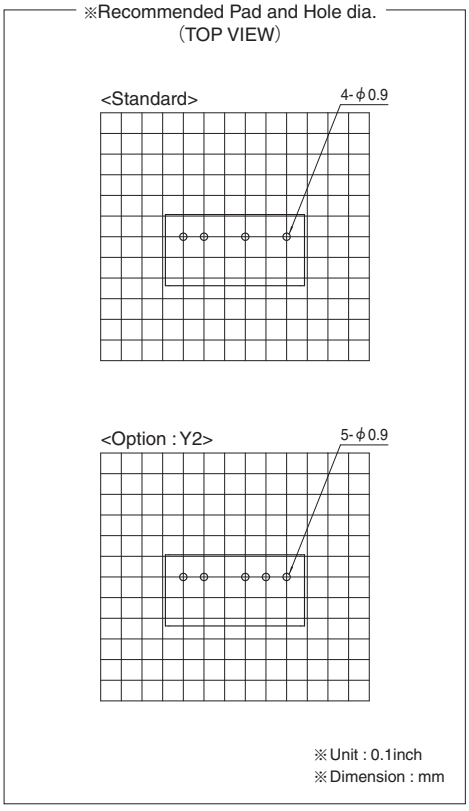

※ Tolerance ±0.5 [±0.02]
※ Dimensions in mm, [ ]= inches
※ Pin terminal material : Copper
※ Planting treatment of terminal : Lead free plating
※ Case material : PBT
※ Weight 4g max

COSEL DC-DC Converters PCB Mount Type

MGW1R5

Ordering information

MG	W	1R5	24	12	-□
①	②	③	④	⑤	⑥

①Series name
②Dual output
③Output wattage
④Input voltage
⑤Output voltage
⑥Optional

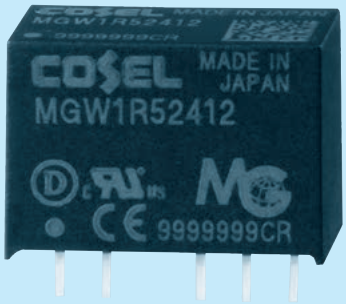

MODEL		MGW1R50512	MGW1R50515	MGW1R51212	MGW1R51215	MGW1R52412	MGW1R52415	MGW1R54812	MGW1R54815
MAX OUTPUT WATTAGE[W]		1.56	1.50	1.56	1.50	1.56	1.50	1.56	1.50
DC OUTPUT	VOLTAGE[V] *1	±12 or +24	±15 or +30	±12 or +24	±15 or +30	±12 or +24	±15 or +30	±12 or +24	±15 or +30
	CURRENT[A]	0.065	0.05	0.065	0.05	0.065	0.05	0.065	0.05

SPECIFICATIONS

	MODEL		MGW1R50512	MGW1R50515	MGW1R51212	MGW1R51215	MGW1R52412	MGW1R52415	MGW1R54812	MGW1R54815
INPUT	VOLTAGE[V]		DC4.5 - 9 (Surge voltage 12.5V, 100ms max)		DC9 - 18 (Surge voltage 25V, 100ms max)		DC18 - 36 (Surge voltage 50V, 100ms max)		DC36 - 76 (Surge voltage 100V, 100ms max)	
	CURRENT[A]	*2	0.38typ	0.38typ	0.16typ	0.16typ	0.080typ	0.079typ	0.041typ	0.040typ
	EFFICIENCY[%]	*2	83typ	81typ	83typ	81typ	82typ	80typ	81typ	80typ
OUTPUT	VOLTAGE[V]		±12 or +24	±15 or +30	±12 or +24	±15 or +30	±12 or +24	±15 or +30	±12 or +24	±15 or +30
	CURRENT[A]		0.065	0.05	0.065	0.05	0.065	0.05	0.065	0.05
	LINE REGULATION[mV]		60max	75max	60max	75max	60max	75max	60max	75max
	LOAD REGULATION[mV]	*3	480max	600max	480max	600max	480max	600max	480max	600max
		*4	600max	750max	600max	750max	600max	750max	600max	750max
	RIPPLE[mVp-p]	*5	150max	150max	150max	150max	150max	150max	150max	150max
	RIPPLE NOISE[mVp-p]	*5	200max	200max	200max	200max	200max	200max	200max	200max
	TEMPERATURE REGULATION[mV]	-20 to +85℃	210max	260max	210max	260max	210max	260max	210max	260max
		-40 to +85℃	320max	390max	320max	390max	320max	390max	320max	390max
	DRIFT[mV]	*6	48max	60max	48max	60max	48max	60max	48max	60max
	START-UP TIME[ms]		30max (Minimum input, Io=100%)							
	OUTPUT VOLTAGE SETTING[V]		11.64 - 12.36	14.55 - 15.45	11.64 - 12.36	14.55 - 15.45	11.64 - 12.36	14.55 - 15.45	11.64 - 12.36	14.55 - 15.45
PROTECTION CIRCUIT	OVERCURRENT PROTECTION		Works over 105% of rating and recovers automatically							
ISOLATION	INPUT-OUTPUT		DC1,500V or AC1,000V 1minute, Cutoff current=10mA, DC500V 1,000MΩ min (20±15℃)							
ENVIRONMENT	OPERATING TEMP.,HUMID.AND ALTITUDE		-40 to +85℃, 20 to 95%RH (Non condensing) (Refer to "Derating"), 5,000m (16,400feet) max							
	STORAGE TEMP.,HUMID.AND ALTITUDE		-40 to +100℃, 20 to 95%RH (Non condensing), 9,000m (30,000feet) max							
	VIBRATION		10 - 55Hz 98.0m/s² (10G), 3minute period, 60minutes each along X, Y and Z axis							
	IMPACT		490.3m/s² (50G) 11ms, once each along X, Y and Z axis							
SAFETY	AGENCY APPROVALS		UL60950-1, C-UL, EN62368-1							
OTHERS	CASE SIZE/WEIGHT		17.0×12.0×8.5mm [0.67×0.48×0.34 inches] (W×H×D) / 4g max							
	COOLING METHOD		Convection/Forced air							

*1 Single output +24V, +30V with no use of COM.
*2 Rated input 5V, 12V, 24V or 48V DC Io=100%
*3 Symmetrical loading from 20% to 100%.
*4 Symmetrical loading from 0% to 100%.
*5 Ripple and Ripple Noise is measured by using test board with ceramic capacitor 1μF at 50mm from output pins. (20MHz Osilloscope)
*6 Drift is the DC output accuracy for eight hours period after a half-hour warm-up at 25℃.
* Parallel operation with other model is not possible.

External view

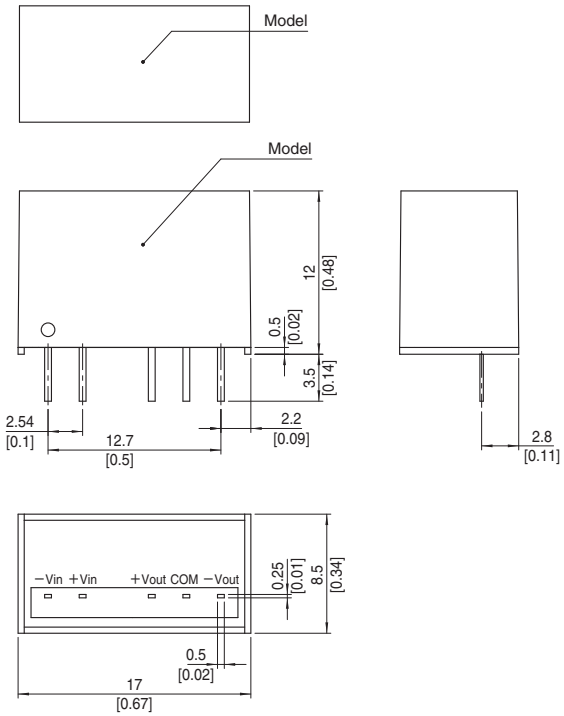

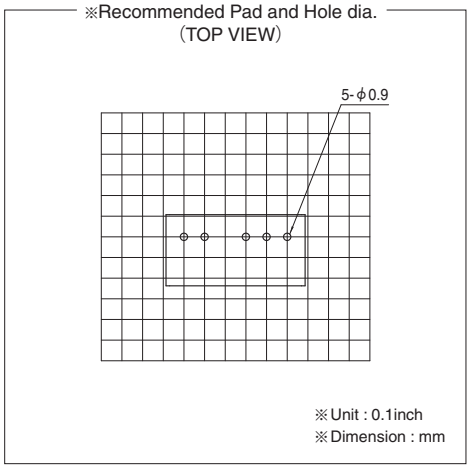

※ Tolerance ±0.5 [±0.02]
※ Dimensions in mm, [ ]= inches
※ Pin terminal material : Copper
※ Planting treatment of terminal : Lead free plating
※ Case material : PBT
※ Weight 4g max

COSEL DC-DC Converters PCB Mount Type

MGS3

Ordering information

MG	S	3	24	05	-□
①	②	③	④	⑤	⑥

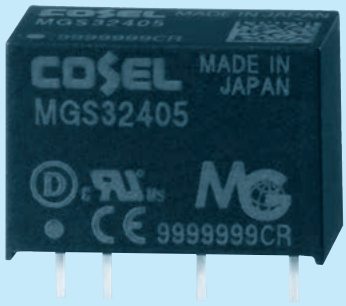

①Series name
②Single output
③Output wattage
④Input voltage
⑤Output voltage
⑥Optional
Y2: Output voltage adjustable (+10%, -5%)

MODEL		MGS3053R3	MGS30505	MGS30512	MGS30515	MGS3123R3	MGS31205	MGS31212	MGS31215
MAX OUTPUT WATTAGE[W]		2.64	3.0	3.0	3.0	2.64	3.0	3.0	3.0
DC OUTPUT	VOLTAGE[V]	3.3	5	12	15	3.3	5	12	15
	CURRENT[A]	0.8	0.6	0.25	0.2	0.8	0.6	0.25	0.2

SPECIFICATIONS

	MODEL		MGS3053R3	MGS30505	MGS30512	MGS30515	MGS3123R3	MGS31205	MGS31212	MGS31215
INPUT	VOLTAGE[V]		DC4.5 - 9 (Surge voltage 12.5V, 100ms max)				DC9 - 18 (Surge voltage 25V, 100ms max)			
	CURRENT[A]	*1	0.67typ	0.73typ	0.71typ	0.71typ	0.28typ	0.30typ	0.29typ	0.30typ
	EFFICIENCY[%]	*1	79typ	82typ	85typ	85typ	80typ	83typ	86typ	85typ
OUTPUT	VOLTAGE[V]		3.3	5	12	15	3.3	5	12	15
	CURRENT[A]		0.8	0.6	0.25	0.2	0.8	0.6	0.25	0.2
	LINE REGULATION[mV]		20max	20max	48max	60max	20max	20max	48max	60max
	LOAD REGULATION[mV]		20max	20max	48max	60max	20max	20max	48max	60max
	RIPPLE[mVp-p]	*2	120max	120max	150max	150max	120max	120max	150max	150max
	RIPPLE NOISE[mVp-p]	*2	200max	200max	200max	200max	200max	200max	200max	200max
	TEMPERATURE REGULATION[mV]	-20 to +75℃	50max	50max	150max	180max	50max	50max	150max	180max
		-40 to +75℃	80max	80max	240max	290max	80max	80max	240max	290max
	DRIFT[mV]	*3	20max	20max	48max	60max	20max	20max	48max	60max
	START-UP TIME[ms]		30max (Minimum input, Io=100%)							
	OUTPUT VOLTAGE SETTING[V]		3.21 - 3.42	4.90 - 5.21	11.64 - 12.36	14.55 - 15.45	3.21 - 3.42	4.90 - 5.21	11.64 - 12.36	14.55 - 15.45
PROTECTION CIRCUIT	OVERCURRENT PROTECTION		Works over 105% of rating and recovers automatically							

MODEL		MGS3243R3	MGS32405	MGS32412	MGS32415	MGS3483R3	MGS34805	MGS34812	MGS34815
MAX OUTPUT WATTAGE[W]		2.64	3.0	3.0	3.0	2.64	3.0	3.0	3.0
DC OUTPUT	VOLTAGE[V]	3.3	5	12	15	3.3	5	12	15
	CURRENT[A]	0.8	0.6	0.25	0.2	0.8	0.6	0.25	0.2

SPECIFICATIONS

	MODEL		MGS3243R3	MGS32405	MGS32412	MGS32415	MGS3483R3	MGS34805	MGS34812	MGS34815
INPUT	VOLTAGE[V]		DC18 - 36 (Surge voltage 50V, 100ms max)				DC36 - 76 (Surge voltage 100V, 100ms max)			
	CURRENT[A]	*1	0.14typ	0.15typ	0.15typ	0.15typ	0.071typ	0.079typ	0.074typ	0.074typ
	EFFICIENCY[%]	*1	80typ	82typ	85typ	85typ	78typ	80typ	85typ	85typ
OUTPUT	VOLTAGE[V]		3.3	5	12	15	3.3	5	12	15
	CURRENT[A]		0.8	0.6	0.25	0.2	0.8	0.6	0.25	0.2
	LINE REGULATION[mV]		20max	20max	48max	60max	20max	20max	48max	60max
	LOAD REGULATION[mV]		20max	20max	48max	60max	20max	20max	48max	60max
	RIPPLE[mVp-p]	*2	120max	120max	150max	150max	120max	120max	150max	150max
	RIPPLE NOISE[mVp-p]	*2	200max	200max	200max	200max	200max	200max	200max	200max
	TEMPERATURE REGULATION[mV]	-20 to +75℃	50max	50max	150max	180max	50max	50max	150max	180max
		-40 to +75℃	80max	80max	240max	290max	80max	80max	240max	290max
	DRIFT[mV]	*3	20max	20max	48max	60max	20max	20max	48max	60max
	START-UP TIME[ms]		30max (Minimum input, Io=100%)							
	OUTPUT VOLTAGE SETTING[V]		3.21 - 3.42	4.90 - 5.21	11.64 - 12.36	14.55 - 15.45	3.21 - 3.42	4.90 - 5.21	11.64 - 12.36	14.55 - 15.45
PROTECTION CIRCUIT	OVERCURRENT PROTECTION		Works over 105% of rating and recovers automatically							

GENERAL SPECIFICATIONS

ISOLATION	INPUT-OUTPUT	DC1,500V or AC1,000V 1minute, Cutoff current=10mA, DC500V 1,000MΩ min (20±15℃)
ENVIRONMENT	OPERATING TEMP.,HUMID.AND ALTITUDE	-40 to +85℃, 20 to 95%RH (Non condensing) (Refer to "Derating"), 5,000m (16,400feet) max
	STORAGE TEMP.,HUMID.AND ALTITUDE	-40 to +100℃, 20 to d95%RH (Non condensing), 9,000m (30,000feet) max
	VIBRATION	10 - 55Hz 98.0m/s² (10G), 3minute period, 60minutes each along X, Y and Z axis
	IMPACT	490.3m/s² (50G) 11ms, once each along X, Y and Z axis
SAFETY	AGENCY APPROVALS	UL60950-1, C-UL, EN62368-1
OTHERS	CASE SIZE/WEIGHT	17.0×12.0×8.5mm [0.67×0.48×0.34 inches] (W×H×D) / 4g max
	COOLING METHOD	Convection/Forced air

*1 Rated input 5V, 12V, 24V or 48V DC Io=100%
*2 Ripple and ripple noise is measured by using test board with ceramic capacitor 1μF at 50mm from output pins.
*3 Drift is the DC output accuracy for eight hours period after a half-hour warm-up at 25℃.
* Parallel operation with other model is not possible.
* MGW3xx12/MGW3xx15 is available as single output, +24V/+30V

External view

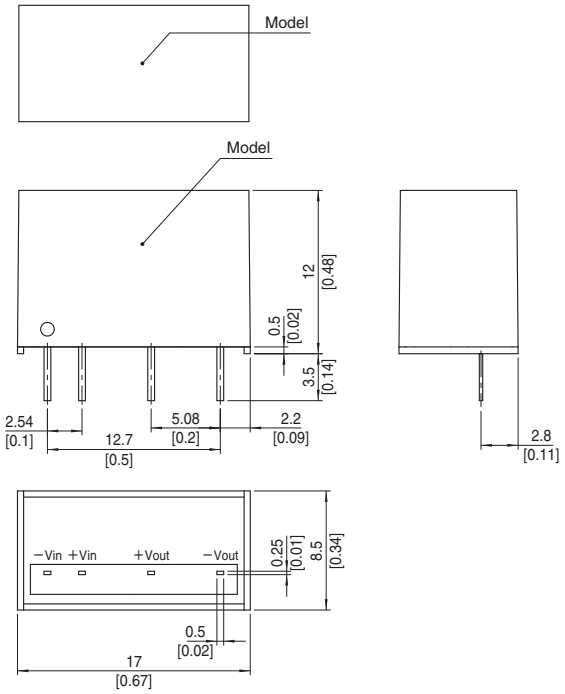

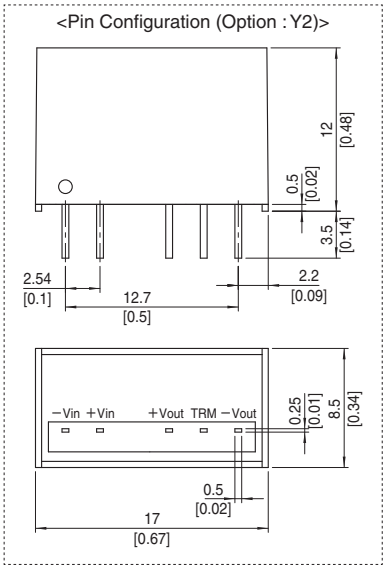

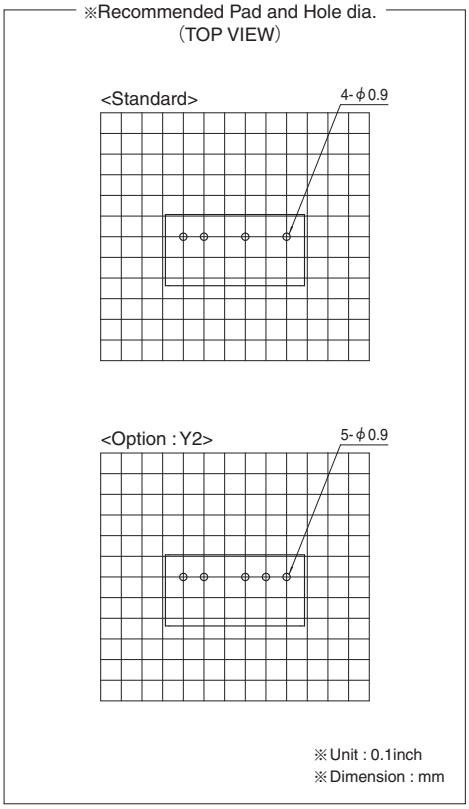

※ Tolerance ±0.5 [±0.02]
※ Dimensions in mm, [ ]= inches
※ Pin terminal material : Copper
※ Planting treatment of terminal : Lead free plating
※ Case material : PBT
※ Weight 4g max

COSEL DC-DC Converters PCB Mount Type

MGW3

Ordering information

MG	W	3	24	12	-□
①	②	③	④	⑤	⑥

①Series name
②Dual output
③Output wattage
④Input voltage
⑤Output voltage
⑥Optional



MODEL			MGW30512	MGW30515	MGW31212	MGW31215	MGW32412	MGW32415	MGW34812	MGW34815
MAX OUTPUT WATTAGE[W]			3.12	3.00	3.12	3.00	3.12	3.00	3.12	3.00
DC OUTPUT	VOLTAGE[V]	*1	±12 or +24	±15 or +30	±12 or +24	±15 or +30	±12 or +24	±15 or +30	±12 or +24	±15 or +30
	CURRENT[A]		0.13	0.1	0.13	0.1	0.13	0.1	0.13	0.1

SPECIFICATIONS

	MODEL		MGW30512	MGW30515	MGW31212	MGW31215	MGW32412	MGW32415	MGW34812	MGW34815
INPUT	VOLTAGE[V]		DC4.5 - 9 (Surge voltage 12.5V, 100ms max)		DC9 - 18 (Surge voltage 25V, 100ms max)		DC18 - 36 (Surge voltage 50V, 100ms max)		DC36 - 76 (Surge voltage 100V, 100ms max)	
	CURRENT[A]	*2	0.76typ	0.74typ	0.31typ	0.31typ	0.16typ	0.16typ	0.080typ	0.077typ
	EFFICIENCY[%]	*2	83typ	82typ	84typ	83typ	83typ	83typ	82typ	82typ
OUTPUT	VOLTAGE[V]		±12 or +24	±15 or +30	±12 or +24	±15 or +30	±12 or +24	±15 or +30	±12 or +24	±15 or +30
	CURRENT[A]		0.13	0.1	0.13	0.1	0.13	0.1	0.13	0.1
	LINE REGULATION[mV]		60max	75max	60max	75max	60max	75max	60max	75max
	LOAD REGULATION[mV]	*3	480max	600max	480max	600max	480max	600max	480max	600max
		*4	600max	750max	600max	750max	600max	750max	600max	750max
	RIPPLE[mVp-p]	*5	150max	150max	150max	150max	150max	150max	150max	150max
	RIPPLE NOISE[mVp-p]	*5	200max	200max	200max	200max	200max	200max	200max	200max
	TEMPERATURE REGULATION[mV]	-20 to +70℃	180max	220max	180max	220max	180max	220max	180max	220max
		-40 to +70℃	290max	340max	290max	340max	290max	340max	290max	340max
	DRIFT[mV]	*6	48max	60max	48max	60max	48max	60max	48max	60max
	START-UP TIME[ms]		30max (Minimum input, Io=100%)							
	OUTPUT VOLTAGE SETTING[V]		11.64 - 12.36	14.55 - 15.45	11.64 - 12.36	14.55 - 15.45	11.64 - 12.36	14.55 - 15.45	11.64 - 12.36	14.55 - 15.45
PROTECTION CIRCUIT	OVERCURRENT PROTECTION		Works over 105% of rating and recovers automatically							
ISOLATION	INPUT-OUTPUT		DC1,500V or AC1,000V 1minute, Cutoff current=10mA, DC500V 1,000MΩ min (20±15℃)							
ENVIRONMENT	OPERATING TEMP.,HUMID.AND ALTITUDE		-40 to +85℃, 20 to 95%RH (Non condensing) (Refer to "Derating"), 5,000m (16,400feet) max							
	STORAGE TEMP.,HUMID.AND ALTITUDE		-40 to +100℃, 20 to 95%RH (Non condensing), 9,000m (30,000feet) max							
	VIBRATION		10 - 55Hz 98.0m/s² (10G), 3minute period, 60minutes each along X, Y and Z axis							
	IMPACT		490.3m/s² (50G) 11ms, once each along X, Y and Z axis							
SAFETY	AGENCY APPROVALS		UL60950-1, C-UL, EN62368-1							
OTHERS	CASE SIZE/WEIGHT		17.0×12.0×8.5mm [0.67×0.48×0.34 inches] (W×H×D) / 4g max							
	COOLING METHOD		Convection/Forced air							

*1 Single output +24V, +30V with no use of COM.
*2 Rated input 5V, 12V, 24V or 48V DC Io=100%
*3 Symmetrical loading from 20% to 100%.
*4 Symmetrical loading from 0% to 100%.
*5 Ripple and Ripple Noise is measured by using test board with ceramic capacitor 1μF at 50mm from output pins. (20MHz Osilloscope)
*6 Drift is the DC output accuracy for eight hours period after a half-hour warm-up at 25℃.
* Parallel operation with other model is not possible.

External view

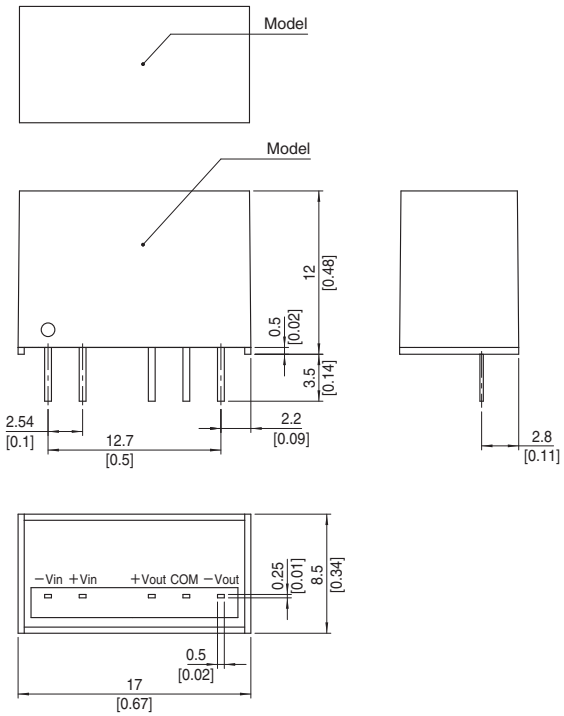

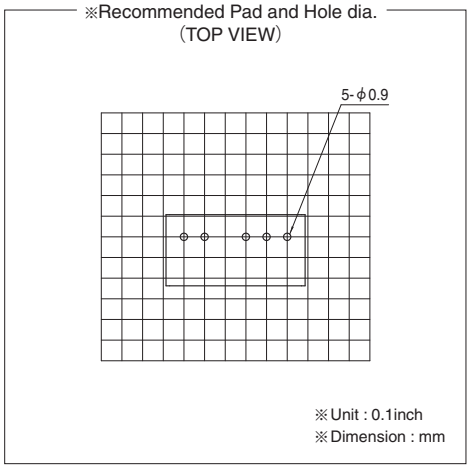

※ Tolerance ±0.5 [±0.02]
※ Dimensions in mm, [ ]= inches
※ Pin terminal material : Copper
※ Planting treatment of terminal : Lead free plating
※ Case material : PBT
※ Weight 4g max

COSEL DC-DC Converters PCB Mount Type

MGS6

Ordering information

MG	S	6	24	05	-□
①	②	③	④	⑤	⑥

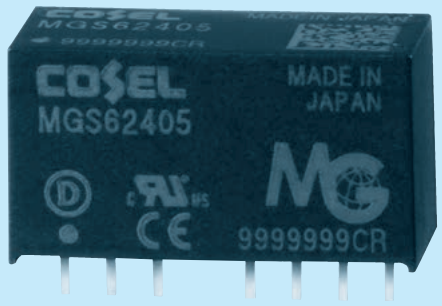

①Series name
②Single output
③Output wattage
④Input voltage
⑤Output voltage
⑥Optional
Y2: Output voltage adjustable (+10%, -5%)

MODEL		MGS6053R3	MGS60505	MGS60512	MGS60515	MGS6123R3	MGS61205	MGS61212	MGS61215
MAX OUTPUT WATTAGE[W]		5.28	6.0	6.0	6.0	5.28	6.0	6.0	6.0
DC OUTPUT	VOLTAGE[V]	3.3	5	12	15	3.3	5	12	15
	CURRENT[A]	1.6	1.2	0.5	0.4	1.6	1.2	0.5	0.4

SPECIFICATIONS

	MODEL		MGS6053R3	MGS60505	MGS60512	MGS60515	MGS6123R3	MGS61205	MGS61212	MGS61215
INPUT	VOLTAGE[V]		DC4.5 - 9 (Surge voltage 12.5V, 100ms max)				DC9 - 18 (Surge voltage 25V, 100ms max)			
	CURRENT[A]	*1	1.31typ	1.42typ	1.37typ	1.37typ	0.54typ	0.59typ	0.57typ	0.57typ
	EFFICIENCY[%]	*1	81typ	85typ	88typ	88typ	82typ	85typ	89typ	89typ
OUTPUT	VOLTAGE[V]		3.3	5	12	15	3.3	5	12	15
	CURRENT[A]		1.6	1.2	0.5	0.4	1.6	1.2	0.5	0.4
	LINE REGULATION[mV]		20max	20max	48max	60max	20max	20max	48max	60max
	LOAD REGULATION[mV]		20max	20max	48max	60max	20max	20max	48max	60max
	RIPPLE[mVp-p]	Io=30% -	75max	75max	100max	100max	75max	75max	100max	100max
		*2 Io=0 - 30%	225max	225max	300max	300max	225max	225max	300max	300max
	RIPPLE NOISE[mVp-p]	Io=30% -	120max	120max	150max	150max	120max	120max	150max	150max
		*2 Io=0 - 30%	300max	300max	400max	400max	300max	300max	400max	400max
	TEMPERATURE REGULATION[mV]	-20 to +70℃	50max	50max	150max	180max	50max	50max	150max	180max
		-40 to +70℃	80max	80max	240max	290max	80max	80max	240max	290max
	DRIFT[mV]	*3	20max	20max	48max	60max	20max	20max	48max	60max
	START-UP TIME[ms]		30max (Minimum input, Io=100%)							
	OUTPUT VOLTAGE SETTING[V]		3.21 - 3.42	4.90 - 5.21	11.64 - 12.36	14.55 - 15.45	3.21 - 3.42	4.90 - 5.21	11.64 - 12.36	14.55 - 15.45
PROTECTION CIRCUIT AND OTHERS	OVERCURRENT PROTECTION		Works over 105% of rating and recovers automatically							
	REMOTE ON/OFF		Provided (Negative logic L : ON, H : OFF)							

MODEL		MGS6243R3	MGS62405	MGS62412	MGS62415	MGS6483R3	MGS64805	MGS64812	MGS64815
MAX OUTPUT WATTAGE[W]		5.28	6.0	6.0	6.0	5.28	6.0	6.0	6.0
DC OUTPUT	VOLTAGE[V]	3.3	5	12	15	3.3	5	12	15
	CURRENT[A]	1.6	1.2	0.5	0.4	1.6	1.2	0.5	0.4

SPECIFICATIONS

	MODEL		MGS6243R3	MGS62405	MGS62412	MGS62415	MGS6483R3	MGS64805	MGS64812	MGS64815
INPUT	VOLTAGE[V]		DC18 - 36 (Surge voltage 50V, 100ms max)				DC36 - 76 (Surge voltage 100V, 100ms max)			
	CURRENT[A]	*1	0.27typ	0.30typ	0.29typ	0.29typ	0.14typ	0.15typ	0.15typ	0.15typ
	EFFICIENCY[%]	*1	82typ	85typ	89typ	89typ	81typ	85typ	89typ	89typ
OUTPUT	VOLTAGE[V]		3.3	5	12	15	3.3	5	12	15
	CURRENT[A]		1.6	1.2	0.5	0.4	1.6	1.2	0.5	0.4
	LINE REGULATION[mV]		20max	20max	48max	60max	20max	20max	48max	60max
	LOAD REGULATION[mV]		20max	20max	48max	60max	20max	20max	48max	60max
	RIPPLE[mVp-p]	Io=30% -	75max	75max	100max	100max	75max	75max	100max	100max
		*2 Io=0 - 30%	225max	225max	300max	300max	225max	225max	300max	300max
	RIPPLE NOISE[mVp-p]	Io=30% -	120max	120max	150max	150max	120max	120max	150max	150max
		*2 Io=0 - 30%	300max	300max	400max	400max	300max	300max	400max	400max
	TEMPERATURE REGULATION[mV]	-20 to +70℃	50max	50max	150max	180max	50max	50max	150max	180max
		-40 to +70℃	80max	80max	240max	290max	80max	80max	240max	290max
	DRIFT[mV]	*3	20max	20max	48max	60max	20max	20max	48max	60max
	START-UP TIME[ms]		30max (Minimum input, Io=100%)							
	OUTPUT VOLTAGE SETTING[V]		3.21 - 3.42	4.90 - 5.21	11.64 - 12.36	14.55 - 15.45	3.21 - 3.42	4.90 - 5.21	11.64 - 12.36	14.55 - 15.45
PROTECTION CIRCUIT AND OTHERS	OVERCURRENT PROTECTION		Works over 105% of rating and recovers automatically							
	REMOTE ON/OFF		Provided (Negative logic L : ON, H : OFF)							

GENERAL SPECIFICATIONS

ISOLATION	INPUT-OUTPUT	DC1,500V or AC1,000V 1minute, Cutoff current=10mA, DC500V 1,000MΩ min (20±15℃)
ENVIRONMENT	OPERATING TEMP.,HUMID.AND ALTITUDE	-40 to +85℃, 20 to 95%RH (Non condensing) (Refer to "Derating"), 5,000m (16,400feet) max
	STORAGE TEMP.,HUMID.AND ALTITUDE	-40 to +100℃, 20 to 95%RH (Non condensing), 9,000m (30,000feet) max
	VIBRATION	10 - 55Hz 98.0m/s² (10G), 3minute period, 60minutes each along X, Y and Z axis
	IMPACT	490.3m/s² (50G) 11ms, once each along X, Y and Z axis
SAFETY	AGENCY APPROVALS	UL60950-1, C-UL, EN62368-1
OTHERS	CASE SIZE/WEIGHT	22.0×12.0×9.5mm [0.87×0.48×0.38 inches] (W×H×D) / 7g max
	COOLING METHOD	Convection/Forced air

*1 Rated input 5V, 12V, 24V or 48V DC Io=100%
*2 Ripple and ripple noise is measured by using test board with ceramic capacitor 1μF at 50mm from output pins.
*3 Drift is the DC output accuracy for eight hours period after a half-hour warm-up at 25℃.
* Parallel operation with other model is not possible.
* MGW6xx12/MGW6xx15 is available as single output, +24V/+30V

External view

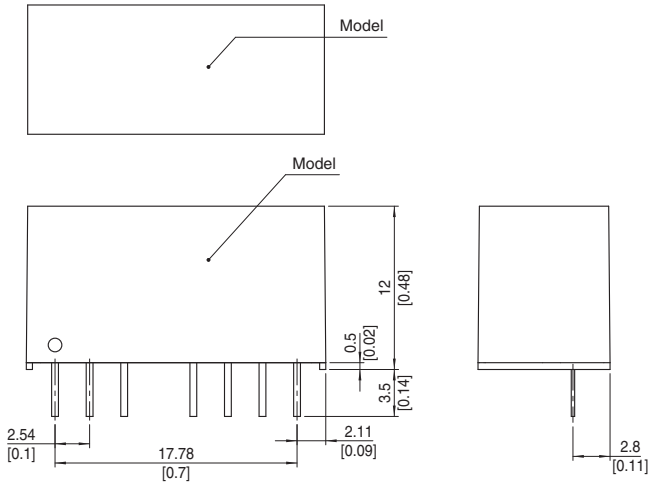

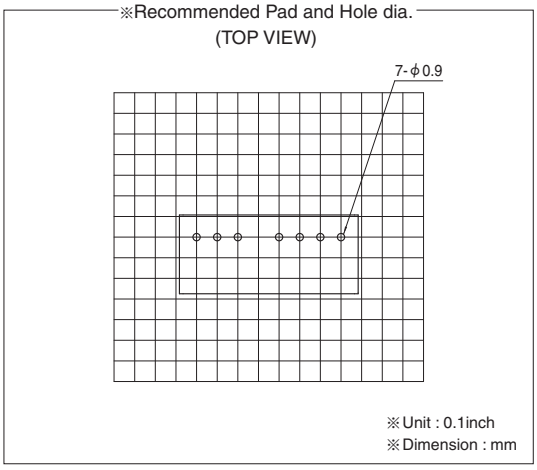

※ Tolerance ±0.5 [±0.02]
※ Dimensions in mm, [ ]= inches
※ Pin terminal material : Copper
※ Planting treatment of terminal : Lead free plating
※ Case material : PBT
※ Weight 7g max

<Pin Configuration (Option : Y2)>

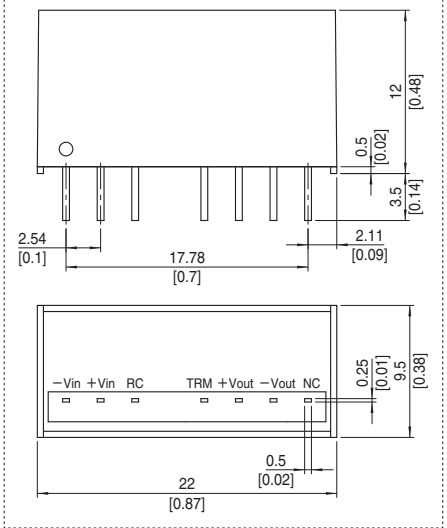

COSEL DC-DC Converters PCB Mount Type

MGW6

Ordering information

MG	W	6	24	12	-□
①	②	③	④	⑤	⑥

①Series name
②Dual output
③Output wattage
④Input voltage
⑤Output voltage
⑥Optional
Y2: Output voltage adjustable (+10%, -5%)

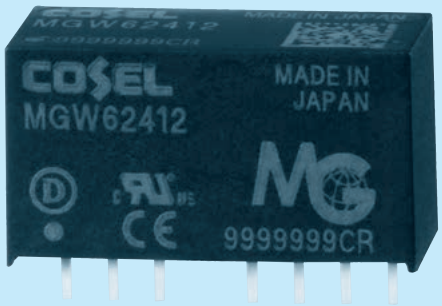

MODEL		MGW60512	MGW60515	MGW61212	MGW61215	MGW62412	MGW62415	MGW64812	MGW64815
MAX OUTPUT WATTAGE[W]		6.00	6.00	6.00	6.00	6.00	6.00	6.00	6.00
DC OUTPUT	VOLTAGE[V] *1	±12 or +24	±15 or +30	±12 or +24	±15 or +30	±12 or +24	±15 or +30	±12 or +24	±15 or +30
	CURRENT[A]	0.25	0.2	0.25	0.2	0.25	0.2	0.25	0.2

SPECIFICATIONS

	MODEL		MGW60512	MGW60515	MGW61212	MGW61215	MGW62412	MGW62415	MGW64812	MGW64815
INPUT	VOLTAGE[V]		DC4.5 - 9 (Surge voltage 12.5V, 100ms max)		DC9 - 18 (Surge voltage 25V, 100ms max)		DC18 - 36 (Surge voltage 50V, 100ms max)		DC36 - 76 (Surge voltage 100V, 100ms max)	
	CURRENT[A]	*2	1.38typ	1.38typ	0.57typ	0.57typ	0.29typ	0.29typ	0.15typ	0.15typ
	EFFICIENCY[%]	*2	87typ	87typ	88typ	88typ	88typ	88typ	88typ	88typ
OUTPUT	VOLTAGE[V]		±12 or +24	±15 or +30	±12 or +24	±15 or +30	±12 or +24	±15 or +30	±12 or +24	±15 or +30
	CURRENT[A]		0.25	0.2	0.25	0.2	0.25	0.2	0.25	0.2
	LINE REGULATION[mV]		60max	75max	60max	75max	60max	75max	60max	75max
	LOAD REGULATION[mV]	*3	480max	600max	480max	600max	480max	600max	480max	600max
		*4	600max	750max	600max	750max	600max	750max	600max	750max
	RIPPLE[mVp-p] *5	Po=30% to	120max	120max	120max	120max	120max	120max	120max	120max
		Po=0 to 30%	480max	480max	360max	360max	360max	360max	360max	360max
	RIPPLE NOISE[mVp-p] *5	Po=30% to	200max	200max	200max	200max	200max	200max	200max	200max
		Po=0 to 30%	600max	600max	500max	500max	500max	500max	500max	500max
	TEMPERATURE REGULATION[mV]	-20 to +70℃	180max	220max	180max	220max	180max	220max	180max	220max
		-40 to +70℃	290max	340max	290max	340max	290max	340max	290max	340max
	DRIFT[mV]	*6	48max	60max	48max	60max	48max	60max	48max	60max
	START-UP TIME[ms]		30max (Minimum input, Io=100%)							
	OUTPUT VOLTAGE SETTING[V]		11.64 - 12.36	14.55 - 15.45	11.64 - 12.36	14.55 - 15.45	11.64 - 12.36	14.55 - 15.45	11.64 - 12.36	14.55 - 15.45
PROTECTION CIRCUIT AND OTHERS	OVERCURRENT PROTECTION		Works over 105% of rating and recovers automatically							
	REMOTE ON/OFF		Provided (Negative logic L : ON, H : OFF)							
ISOLATION	INPUT-OUTPUT		DC1,500V or AC1,000V 1minute, Cutoff current=10mA, DC500V 1,000MΩ min (20±15℃)							
ENVIRONMENT	OPERATING TEMP.,HUMID.AND ALTITUDE		-40 to +85℃, 20 to 95%RH (Non condensing) (Refer to "Derating"), 5,000m (16,400feet) max							
	STORAGE TEMP.,HUMID.AND ALTITUDE		-40 to +100℃, 20 to 95%RH (Non condensing), 9,000m (30,000feet) max							
	VIBRATION		10 - 55Hz 98.0m/s² (10G), 3minute period, 60minutes each along X, Y and Z axis							
	IMPACT		490.3m/s² (50G) 11ms, once each along X, Y and Z axis							
SAFETY	AGENCY APPROVALS		UL60950-1, C-UL, EN62368-1							
OTHERS	CASE SIZE/WEIGHT		22.0×12.0×9.5mm [0.87×0.48×0.38 inches] (W×H×D) / 7g max							
	COOLING METHOD		Convection/Forced air							

*1 Single output +24V, +30V with no use of COM.
*2 Rated input 5V, 12V, 24V or 48V DC Io=100%
*3 Symmetrical loading from 20% to 100%.
*4 Symmetrical loading from 0% to 100%.
*5 Ripple and Ripple Noise is measured by using test board with ceramic capacitor 1μF at 50mm from output pins. (20MHz Osilloscope). Po:Output wattage.
*6 Drift is the DC output accuracy for eight hours period after a half-hour warm-up at 25℃.
* Parallel operation with other model is not possible.

External view

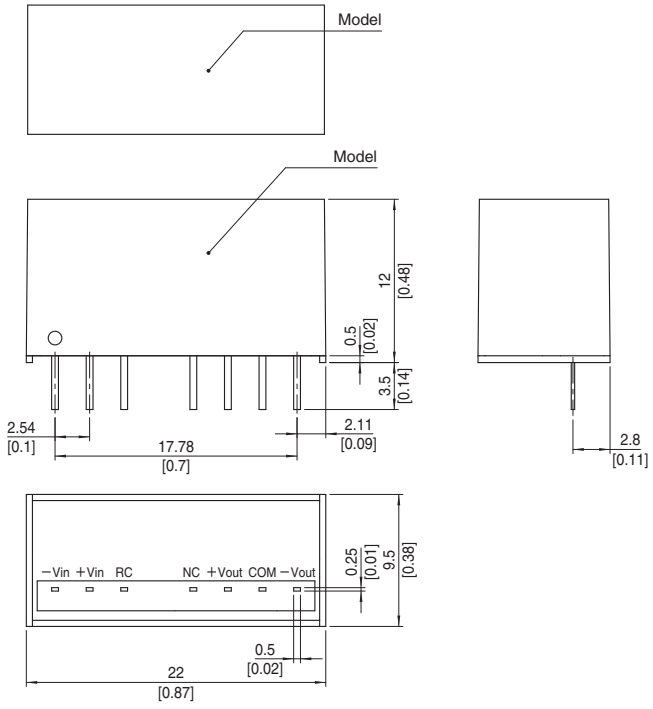

※Recommended Pad and Hole dia.
(TOP VIEW)

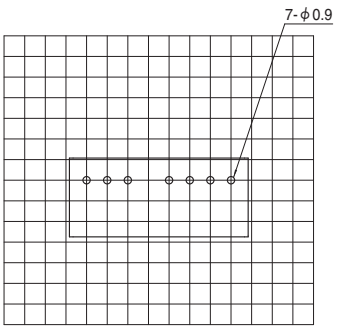

※Unit : 0.1inch
※Dimension : mm

※ Tolerance ±0.5 [±0.02]
※ Dimensions in mm, [ ]= inches
※ Pin terminal material : Copper
※ Planting treatment of terminal : Lead free plating
※ Case material : PBT
※ Weight 7g max

<Pin Configuration (Option : Y2)>

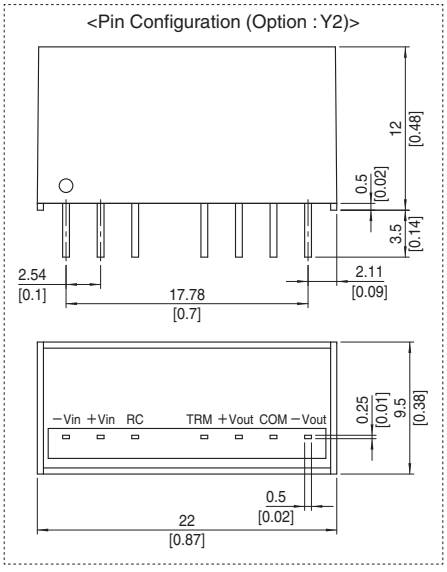

COSEL DC-DC Converters PCB Mount Type

MGS10

Ordering information

MG	S	10	24	05	-□
①	②	③	④	⑤	⑥

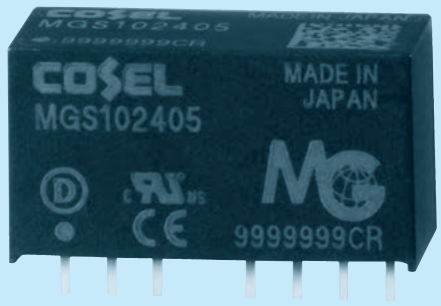

①Series name
②Single output
③Output wattage
④Input voltage
⑤Output voltage
⑥Optional
Y2: Output voltage adjustable (+10%, -5%)

MODEL		MGS10053R3	MGS100505	MGS100512	MGS100515	MGS10123R3	MGS101205	MGS101212	MGS101215
MAX OUTPUT WATTAGE[W]		8.58	10.0	10.8	10.5	8.58	10.0	10.8	10.5
DC OUTPUT	VOLTAGE[V]	3.3	5	12	15	3.3	5	12	15
	CURRENT[A]	2.6	2.0	0.9	0.7	2.6	2.0	0.9	0.7

SPECIFICATIONS

	MODEL		MGS10053R3	MGS100505	MGS100512	MGS100515	MGS10123R3	MGS101205	MGS101212	MGS101215
INPUT	VOLTAGE[V]		DC4.5 - 9 (Surge voltage 12.5V, 100ms max)				DC9 - 18 (Surge voltage 25V, 100ms max)			
	CURRENT[A]	*1	2.02typ	2.30typ	2.46typ	2.39typ	0.83typ	0.94typ	1.02typ	0.99typ
	EFFICIENCY[%]	*1	85typ	87typ	88typ	88typ	87typ	89typ	89typ	89typ
OUTPUT	VOLTAGE[V]		3.3	5	12	15	3.3	5	12	15
	CURRENT[A]		2.6	2.0	0.9	0.7	2.6	2.0	0.9	0.7
	LINE REGULATION[mV]		20max	20max	48max	60max	20max	20max	48max	60max
	LOAD REGULATION[mV]		20max	20max	48max	60max	20max	20max	48max	60max
	RIPPLE[mVp-p]	Io=30% -	75max	75max	100max	100max	75max	75max	100max	100max
		*2 Io=0 - 30%	225max	225max	300max	300max	225max	225max	300max	300max
	RIPPLE NOISE[mVp-p]	Io=30% -	120max	120max	150max	150max	120max	120max	150max	150max
		*2 Io=0 - 30%	300max	300max	400max	400max	300max	300max	400max	400max
	TEMPERATURE REGULATION[mV]	-20 to +50℃	50max	50max	150max	180max	50max	50max	150max	180max
		-40 to +50℃	80max	80max	240max	290max	80max	80max	240max	290max
	DRIFT[mV]	*3	20max	20max	48max	60max	20max	20max	48max	60max
	START-UP TIME[ms]		30max (Minimum input, Io=100%)							
	OUTPUT VOLTAGE SETTING[V]		3.21 - 3.42	4.90 - 5.21	11.64 - 12.36	14.55 - 15.45	3.21 - 3.42	4.90 - 5.21	11.64 - 12.36	14.55 - 15.45
PROTECTION CIRCUIT AND OTHERS	OVERCURRENT PROTECTION		Works over 105% of rating and recovers automatically							
	REMOTE ON/OFF		Provided (Negative logic L : ON, H : OFF)							

MODEL			MGS10243R3	MGS102405	MGS102412	MGS102415	MGS10483R3	MGS104805	MGS104812	MGS104815
MAX OUTPUT WATTAGE[W]			8.58	10.0	10.8	10.5	8.58	10.0	10.8	10.5
DC OUTPUT	VOLTAGE[V]	*1	3.3	5	12	15	3.3	5	12	15
	CURRENT[A]		2.6	2.0	0.9	0.7	2.6	2.0	0.9	0.7

SPECIFICATIONS

	MODEL		MGS10243R3	MGS102405	MGS102412	MGS102415	MGS10483R3	MGS104805	MGS104812	MGS104815
INPUT	VOLTAGE[V]		DC18 - 36 (Surge voltage 50V, 100ms max)				DC36 - 76 (Surge voltage 100V, 100ms max)			
	CURRENT[A]	*1	0.42typ	0.47typ	0.50typ	0.49typ	0.21typ	0.24typ	0.25typ	0.25typ
	EFFICIENCY[%]	*1	87typ	89typ	90typ	90typ	87typ	89typ	90typ	90typ
OUTPUT	VOLTAGE[V]		3.3	5	12	15	3.3	5	12	15
	CURRENT[A]		2.6	2.0	0.9	0.7	2.6	2.0	0.9	0.7
	LINE REGULATION[mV]		20max	20max	48max	60max	20max	20max	48max	60max
	LOAD REGULATION[mV]		20max	20max	48max	60max	20max	20max	48max	60max
	RIPPLE[mVp-p]	Io=30% -	75max	75max	100max	100max	75max	75max	100max	100max
		*2 Io=0 - 30%	225max	225max	300max	300max	225max	225max	300max	300max
	RIPPLE NOISE[mVp-p]	Io=30% -	120max	120max	150max	150max	120max	120max	150max	150max
		*2 Io=0 - 30%	300max	300max	400max	400max	300max	300max	400max	400max
	TEMPERATURE REGULATION[mV]	-20 to +50℃	50max	50max	150max	180max	50max	50max	150max	180max
		-40 to +50℃	80max	80max	240max	290max	80max	80max	240max	290max
	DRIFT[mV]	*3	20max	20max	48max	60max	20max	20max	48max	60max
	START-UP TIME[ms]		30max (Minimum input, Io=100%)							
	OUTPUT VOLTAGE SETTING[V]		3.21 - 3.42	4.90 - 5.21	11.64 - 12.36	14.55 - 15.45	3.21 - 3.42	4.90 - 5.21	11.64 - 12.36	14.55 - 15.45
PROTECTION CIRCUIT AND OTHERS	OVERCURRENT PROTECTION		Works over 105% of rating and recovers automatically							
	REMOTE ON/OFF		Provided (Negative logic L : ON, H : OFF)							

GENERAL SPECIFICATIONS

ISOLATION	INPUT-OUTPUT	DC1,500V or AC1,000V 1minute, Cutoff current=10mA, DC500V 1,000MΩ min (20±15℃)
ENVIRONMENT	OPERATING TEMP.,HUMID.AND ALTITUDE	-40 to +85℃, 20 to 95%RH (Non condensing) (Refer to "Derating"), 5,000m (16,400feet) max
	STORAGE TEMP.,HUMID.AND ALTITUDE	-40 to +100℃, 20 to 95%RH (Non condensing), 9,000m (30,000feet) max
	VIBRATION	10 - 55Hz 98.0m/s² (10G), 3minute period, 60minutes each along X, Y and Z axis
	IMPACT	490.3m/s² (50G) 11ms, once each along X, Y and Z axis
SAFETY	AGENCY APPROVALS	UL60950-1, C-UL, EN62368-1
OTHERS	CASE SIZE/WEIGHT	22.0×12.0×9.5mm [0.87×0.48×0.38 inches] (W×H×D) / 7g max
	COOLING METHOD	Convection/Forced air

*1 Rated input 5V, 12V, 24V or 48V DC Io=100%
*2 Ripple and ripple noise is measured by using test board with ceramic capacitor 1μF at 50mm from output pins.
*3 Drift is the DC output accuracy for eight hours period after a half-hour warm-up at 25℃.
* Parallel operation with other model is not possible.
* MGW10xx12/MGW10xx15 is available as single output, +24V/+30V

External view

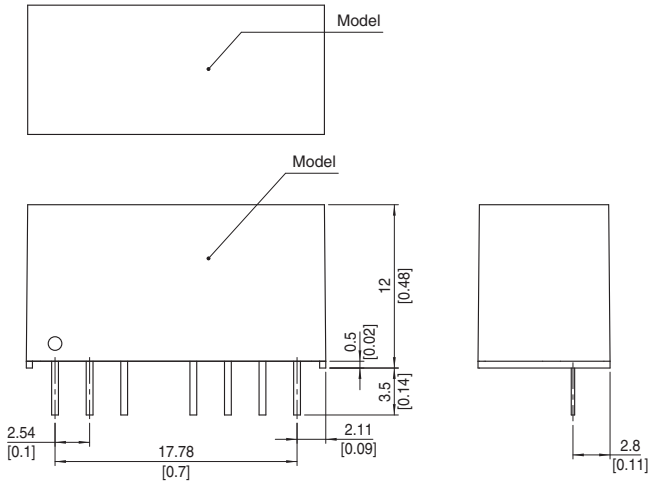

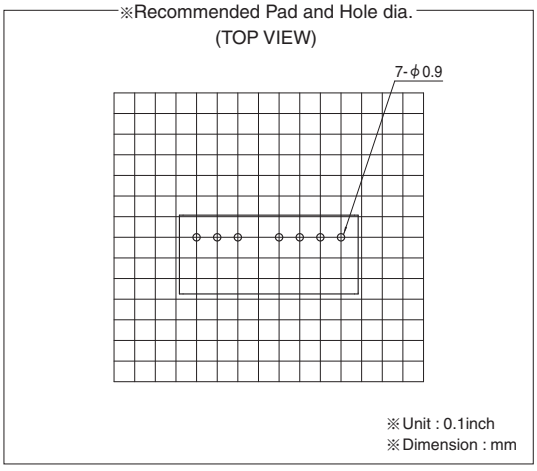

※ Tolerance ±0.5 [±0.02]
※ Dimensions in mm, [ ]= inches
※ Pin terminal material : Copper
※ Planting treatment of terminal : Lead free plating
※ Case material : PBT
※ Weight 7g max

<Pin Configuration (Option : Y2)>

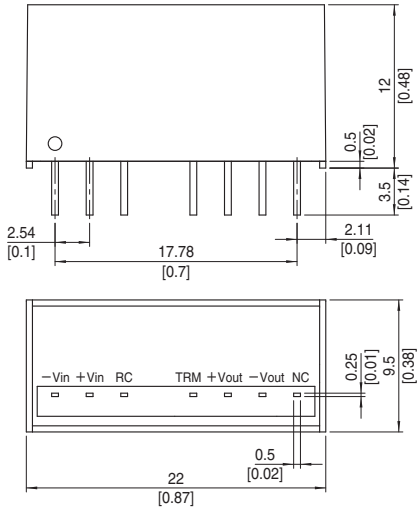

COSEL DC-DC Converters PCB Mount Type

MGW10

Ordering information

MG	W	10	24	12	-□
①	②	③	④	⑤	⑥

①Series name
②Dual output
③Output wattage
④Input voltage
⑤Output voltage
⑥Optional
Y2: Output voltage adjustable (+10%, -5%)

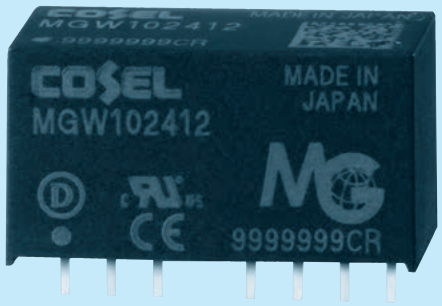

MODEL		MGW100512	MGW100515	MGW101212	MGW101215	MGW102412	MGW102415	MGW104812	MGW104815
MAX OUTPUT WATTAGE[W]		10.08	10.20	10.08	10.20	10.08	10.20	10.08	10.20
DC OUTPUT	VOLTAGE[V] *1	±12 or +24	±15 or +30	±12 or +24	±15 or +30	±12 or +24	±15 or +30	±12 or +24	±15 or +30
	CURRENT[A]	0.42	0.34	0.42	0.34	0.42	0.34	0.42	0.34

SPECIFICATIONS

	MODEL		MGW100512	MGW100515	MGW101212	MGW101215	MGW102412	MGW102415	MGW104812	MGW104815
INPUT	VOLTAGE[V]		DC4.5 - 9 (Surge voltage 12.5V, 100ms max)		DC9 - 18 (Surge voltage 25V, 100ms max)		DC18 - 36 (Surge voltage 50V, 100ms max)		DC36 - 76 (Surge voltage 100V, 100ms max)	
	CURRENT[A]	*2	2.38typ	2.40typ	0.97typ	0.97typ	0.49typ	0.49typ	0.24typ	0.25typ
	EFFICIENCY[%]	*2	85typ	85typ	87typ	88typ	87typ	88typ	88typ	88typ
OUTPUT	VOLTAGE[V]		±12 or +24	±15 or +30	±12 or +24	±15 or +30	±12 or +24	±15 or +30	±12 or +24	±15 or +30
	CURRENT[A]		0.42	0.34	0.42	0.34	0.42	0.34	0.42	0.34
	LINE REGULATION[mV]		60max	75max	60max	75max	60max	75max	60max	75max
	LOAD REGULATION[mV]	*3	480max	600max	480max	600max	480max	600max	480max	600max
		*4	600max	750max	600max	750max	600max	750max	600max	750max
	RIPPLE[mVp-p]	Po=30% to	120max	120max	120max	120max	120max	120max	120max	120max
	*5	Po=0 to 30%	480max	480max	360max	360max	360max	360max	360max	360max
	RIPPLE NOISE[mVp-p]	Po=30% to	200max	200max	200max	200max	200max	200max	200max	200max
	*5	Po=0 to 30%	600max	600max	500max	500max	500max	500max	500max	500max
	TEMPERATURE REGULATION[mV]	-20 to +50℃	150max	180max	150max	180max	150max	180max	150max	180max
		-40 to +50℃	240max	290max	240max	290max	240max	290max	240max	290max
	DRIFT[mV]	*6	48max	60max	48max	60max	48max	60max	48max	60max
	START-UP TIME[ms]		30max (Minimum input, Io=100%)							
	OUTPUT VOLTAGE SETTING[V]		11.64 - 12.36	14.55 - 15.45	11.64 - 12.36	14.55 - 15.45	11.64 - 12.36	14.55 - 15.45	11.64 - 12.36	14.55 - 15.45
PROTECTION CIRCUIT AND OTHERS	OVERCURRENT PROTECTION		Works over 105% of rating and recovers automatically							
	REMOTE ON/OFF		Provided (Negative logic L : ON, H : OFF)							
ISOLATION	INPUT-OUTPUT		DC1,500V or AC1,000V 1minute, Cutoff current=10mA, DC500V 1,000MΩ min (20±15℃)							
ENVIRONMENT	OPERATING TEMP.,HUMID.AND ALTITUDE		-40 to +85℃, 20 to 95%RH (Non condensing) (Refer to "Derating"), 5,000m (16,400feet) max							
	STORAGE TEMP.,HUMID.AND ALTITUDE		-40 to +100℃, 20 to 95%RH (Non condensing), 9,000m (30,000feet) max							
	VIBRATION		10 - 55Hz 98.0m/s² (10G), 3minute period, 60minutes each along X, Y and Z axis							
	IMPACT		490.3m/s² (50G) 11ms, once each along X, Y and Z axis							
SAFETY	AGENCY APPROVALS		UL60950-1, C-UL, EN62368-1							
OTHERS	CASE SIZE/WEIGHT		22.0×12.0×9.5mm [0.87×0.48×0.38 inches] (W×H×D) / 7g max							
	COOLING METHOD		Convection/Forced air							

*1 Single output +24V, +30V with no use of COM.
*2 Rated input 5V, 12V, 24V or 48V DC Io=100%
*3 Symmetrical loading from 20% to 100%.
*4 Symmetrical loading from 0% to 100%.
*5 Ripple and Ripple Noise is measured by using test board with ceramic capacitor 1μF at 50mm from output pins. (20MHz Osilloscope). Po:Output wattage.
*6 Drift is the DC output accuracy for eight hours period after a half-hour warm-up at 25℃.
* Parallel operation with other model is not possible.

External view

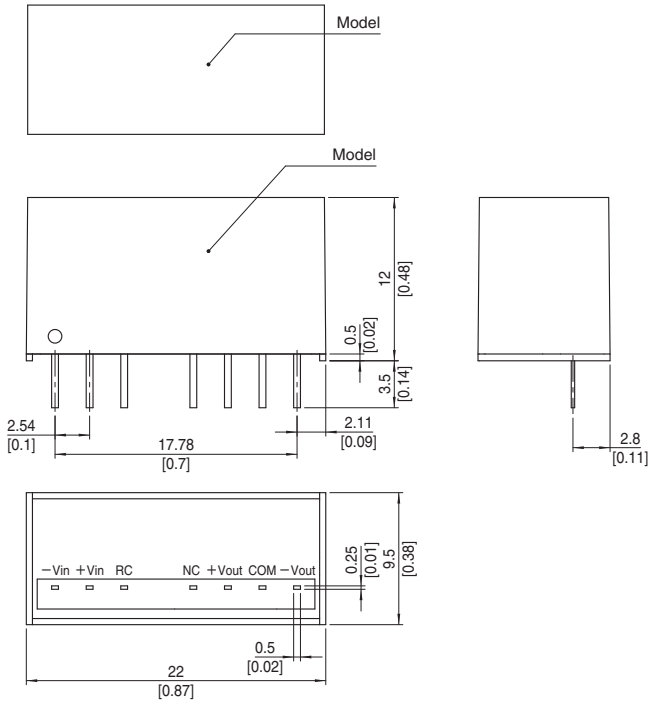

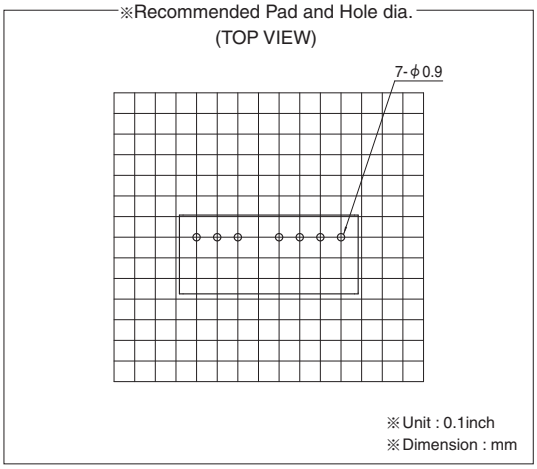

※ Tolerance ±0.5 [±0.02]
※ Dimensions in mm, [ ]= inches
※ Pin terminal material : Copper
※ Planting treatment of terminal : Lead free plating
※ Case material : PBT
※ Weight 7g max

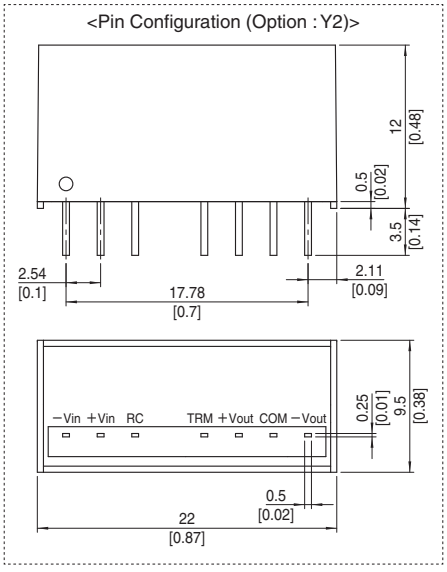

COSEL DC-DC Converters PCB Mount Type

MGFS1R5

Ordering information

MGF	S	1R5	24	05	-□
①	②	③	④	⑤	⑥

①Series name
②Single output
③Output wattage
④Input voltage
⑤Output voltage
⑥Optional
Y2: Output voltage adjustable (+10%, -5%)

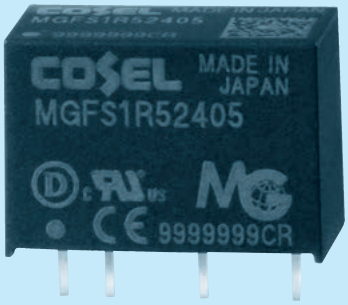

MODEL		MGFS1R5243R3	MGFS1R52405	MGFS1R52412	MGFS1R52415
MAX OUTPUT WATTAGE[W]		1.32	1.50	1.56	1.50
DC OUTPUT	VOLTAGE[V]	3.3	5	12	15
	CURRENT[A]	0.4	0.3	0.13	0.1

SPECIFICATIONS

	MODEL		MGFS1R5243R3	MGFS1R52405	MGFS1R52412	MGFS1R52415
INPUT	VOLTAGE[V]		DC9 - 36(Surge voltage 50V,100ms max)			
	CURRENT[A]	*1	0.072typ	0.079typ	0.079typ	0.077typ
	EFFICIENCY[%]	*1	77typ	80typ	83typ	82typ
OUTPUT	VOLTAGE[V]		3.3	5	12	15
	CURRENT[A]		0.4	0.3	0.13	0.1
	LINE REGULATION[mV]		20max	20max	48max	60max
	LOAD REGULATION[mV]		20max	20max	48max	60max
	RIPPLE[mVp-p]	*2	120max	120max	150max	150max
	RIPPLE NOISE[mVp-p]	*2	200max	200max	200max	200max
	TEMPERATURE REGULATION[mV]	-20 to +85℃	50max	50max	150max	180max
		-40 to +85℃	80max	80max	240max	290max
	DRIFT[mV]	*3	20max	20max	48max	60max
	START-UP TIME[ms]		30max (Minimum input, Io=100%)			
	OUTPUT VOLTAGE SETTING[V]		3.21 - 3.42	4.90 - 5.21	11.64 - 12.36	14.55 - 15.45
PROTECTION CIRCUIT	OVERCURRENT PROTECTION		Works over 105% of rating and recovers automatically			

MODEL		MGFS1R5483R3	MGFS1R54805	MGFS1R54812	MGFS1R54815
MAX OUTPUT WATTAGE[W]		1.32	1.50	1.56	1.50
DC OUTPUT	VOLTAGE[V]	3.3	5	12	15
	CURRENT[A]	0.4	0.3	0.13	0.1

SPECIFICATIONS

	MODEL		MGFS1R5483R3	MGFS1R54805	MGFS1R54812	MGFS1R54815
INPUT	VOLTAGE[V]		DC18 - 76(Surge voltage 100V,100ms max)			
	CURRENT[A]	*1	0.037typ	0.040typ	0.040typ	0.039typ
	EFFICIENCY[%]	*1	76typ	79typ	82typ	81typ
OUTPUT	VOLTAGE[V]		3.3	5	12	15
	CURRENT[A]		0.4	0.3	0.13	0.1
	LINE REGULATION[mV]		20max	20max	48max	60max
	LOAD REGULATION[mV]		20max	20max	48max	60max
	RIPPLE[mVp-p]	*2	120max	120max	150max	150max
	RIPPLE NOISE[mVp-p]	*2	200max	200max	200max	200max
	TEMPERATURE REGULATION[mV]	-20 to +85℃	50max	50max	150max	180max
		-40 to +85℃	80max	80max	240max	290max
	DRIFT[mV]	*3	20max	20max	48max	60max
	START-UP TIME[ms]		30max (Minimum input, Io=100%)			
	OUTPUT VOLTAGE SETTING[V]		3.21 - 3.42	4.90 - 5.21	11.64 - 12.36	14.55 - 15.45
PROTECTION CIRCUIT	OVERCURRENT PROTECTION		Works over 105% of rating and recovers automatically			

GENERAL SPECIFICATIONS

ISOLATION	INPUT-OUTPUT	DC1,500V or AC1,000V 1minute, Cutoff current=10mA, DC500V 1,000MΩ min (20±15℃)
ENVIRONMENT	OPERATING TEMP.,HUMID.AND ALTITUDE	-40 to +85℃, 20 to 95%RH (Non condensing) (Refer to "Derating"), 5,000m (16,400feet) max
	STORAGE TEMP.,HUMID.AND ALTITUDE	-40 to +100℃, 20 to 95%RH (Non condensing), 9,000m (30,000feet) max
	VIBRATION	10 - 55Hz 98.0m/s² (10G), 3minute period, 60minutes each along X, Y and Z axis
	IMPACT	490.3m/s² (50G) 11ms, once each along X, Y and Z axis
SAFETY	AGENCY APPROVALS	UL60950-1, C-UL, EN62368-1
OTHERS	CASE SIZE/WEIGHT	17.0×12.0×8.5mm [0.67×0.48×0.34 inches] (W×H×D) / 4g max
	COOLING METHOD	Convection/Forced air

*1 Rated input 24V or 48V DC Io=100%
*2 Ripple and ripple noise is measured by using test board with ceramic capacitor 1μF at 50mm from output pins.
*3 Drift is the DC output accuracy for eight hours period after a half-hour warm-up at 25℃.
* Parallel operation with other model is not possible.
* MGFW1R5xx12/MGFW1R5xx15 is available as single output, +24V/+30V

External view

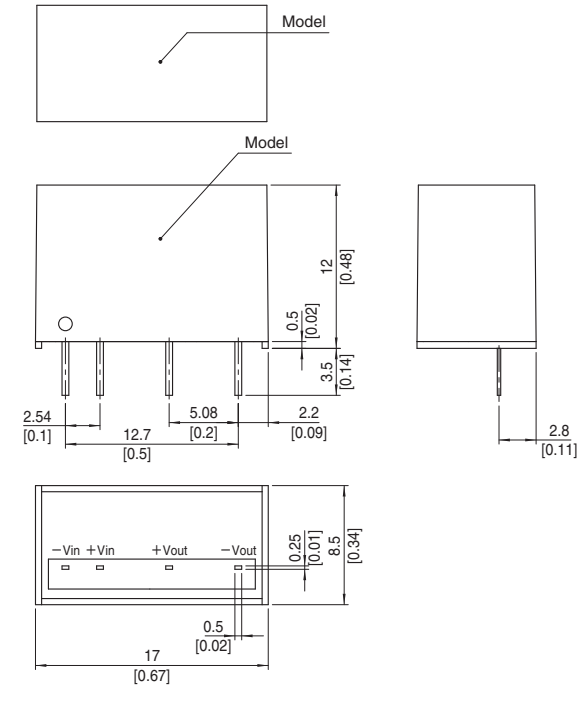

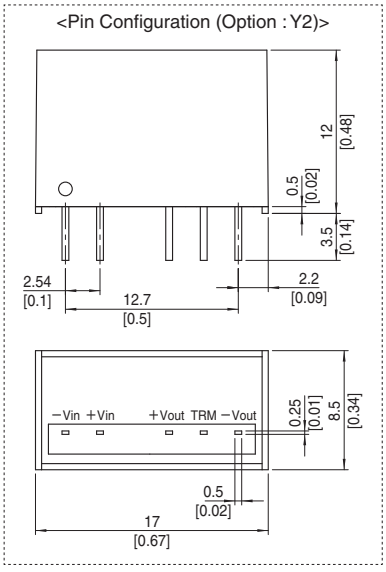

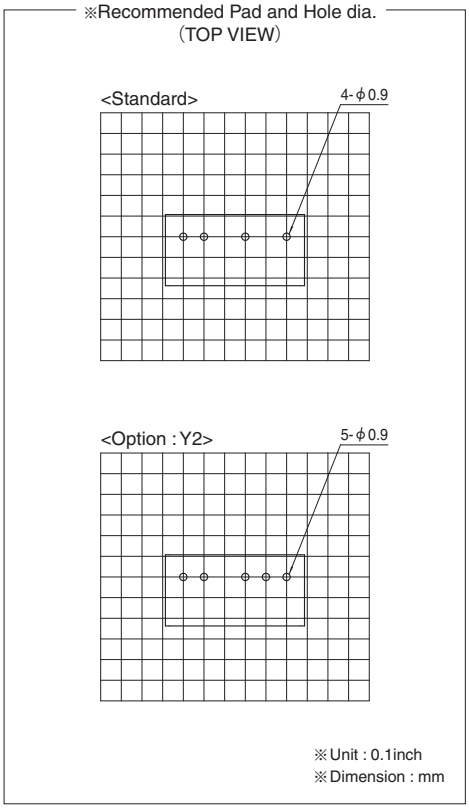

※ Tolerance ±0.5 [±0.02]
※ Dimensions in mm, [ ]= inches
※ Pin terminal material : Copper
※ Planting treatment of terminal : Lead free plating
※ Case material : PBT
※ Weight 4g max

COSEL DC-DC Converters PCB Mount Type

MGFW1R5

Ordering information

MGF	W	1R5	24	12	-□
①	②	③	④	⑤	⑥

①Series name
②Dual output
③Output wattage
④Input voltage
⑤Output voltage
⑥Optional

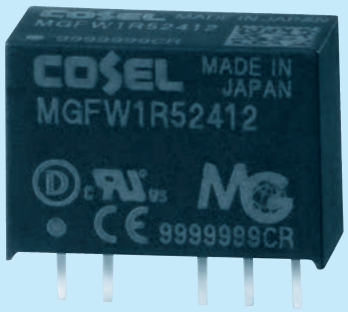

MODEL		MGFW1R52412	MGFW1R52415	MGFW1R54812	MGFW1R54815
MAX OUTPUT WATTAGE[W]		1.56	1.50	1.56	1.50
DC OUTPUT	VOLTAGE[V] ＊1	±12 or +24	±15 or +30	±12 or +24	±15 or +30
	CURRENT[A]	0.065	0.05	0.065	0.05

SPECIFICATIONS

	MODEL		MGFW1R52412	MGFW1R52415	MGFW1R54812	MGFW1R54815
INPUT	VOLTAGE[V]		DC9 - 36 (Surge voltage 50V, 100ms max)		DC18 - 76 (Surge voltage 100V, 100ms max)	
	CURRENT[A]	＊2	0.081typ	0.079typ	0.041typ	0.040typ
	EFFICIENCY[%]	＊2	81typ	80typ	81typ	79typ
OUTPUT	VOLTAGE[V]		±12 (+24)	±15 (+30)	±12 (+24)	±15 (+30)
	CURRENT[A]		0.065	0.05	0.065	0.05
	LINE REGULATION[mV]		60max	75max	60max	75max
	LOAD REGULATION[mV]	＊3	480max	600max	480max	600max
		＊4	600max	750max	600max	750max
	RIPPLE[mVp-p]	＊5	150max	150max	150max	150max
	RIPPLE NOISE[mVp-p]	＊5	200max	200max	200max	200max
	TEMPERATURE REGULATION[mV]	-20 to +85℃	210max	260max	150max	180max
		-40 to +85℃	320max	390max	240max	290max
	DRIFT[mV]	＊6	48max	60max	48max	60max
	START-UP TIME[ms]		30max (Minimum input, Io=100%)			
	OUTPUT VOLTAGE SETTING[V]		11.64 - 12.36	14.55 - 15.45	11.64 - 12.36	14.55 - 15.45
PROTECTION CIRCUIT	OVERCURRENT PROTECTION		Works over 105% of rating and recovers automatically			
ISOLATION	INPUT-OUTPUT		DC1,500V or AC1,000V 1minute, Cutoff current=10mA, DC500V 1,000MΩ min (20±15℃)			
ENVIRONMENT	OPERATING TEMP.,HUMID.AND ALTITUDE		-40 to +85℃, 20 to 95%RH (Non condensing) (Refer to "Derating"), 5,000m (16,400feet) max			
	STORAGE TEMP.,HUMID.AND ALTITUDE		-40 to +100℃, 20 to 95%RH (Non condensing), 9,000m (30,000feet) max			
	VIBRATION		10 - 55Hz 98.0m/s² (10G), 3minute period, 60minutes each along X, Y and Z axis			
	IMPACT		490.3m/s² (50G) 11ms, once each along X, Y and Z axis			
SAFETY	AGENCY APPROVALS		UL60950-1, C-UL, EN62368-1			
OTHERS	CASE SIZE/WEIGHT		17.0×12.0×8.5mm [0.67×0.48×0.34 inches] (W×H×D) / 4g max			
	COOLING METHOD		Convection/Forced air			

＊1 Single output +24V, +30V with no use of COM.
＊2 Rated input 24V or 48V DC Io=100%
＊3 Symmetrical loading from 20% to 100%.
＊4 Symmetrical loading from 0% to 100%.
＊5 Ripple and Ripple Noise is measured by using test board with ceramic capacitor 1μF at 50mm from output pins.
＊6 Drift is the DC output accuracy for eight hours period after a half-hour warm-up at 25℃.
＊ Parallel operation with other model is not possible.

External view

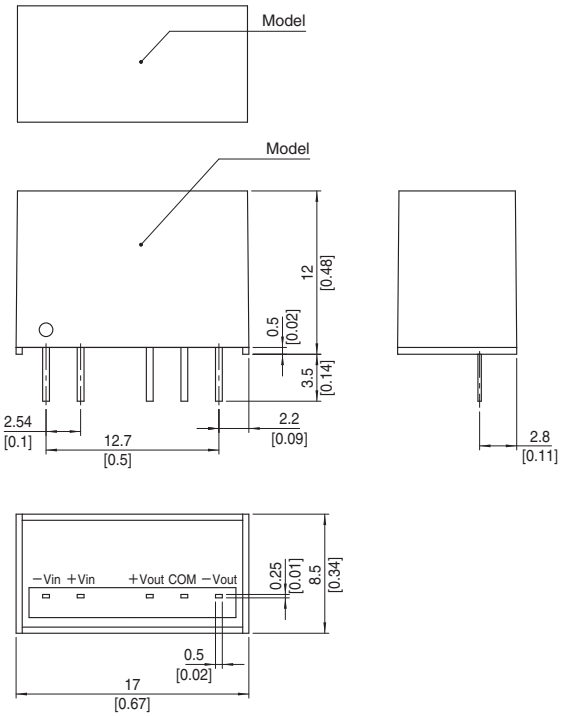

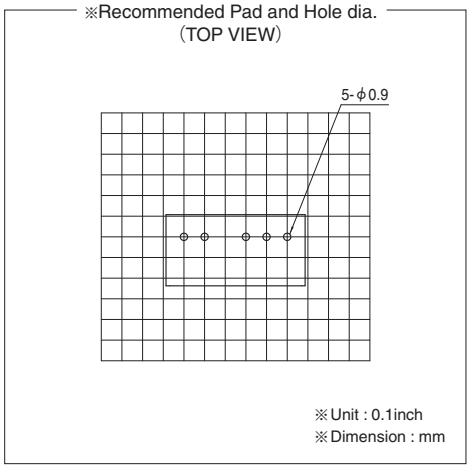

※ Tolerance ±0.5 [±0.02]
※ Dimensions in mm, [ ]= inches
※ Pin terminal material : Copper
※ Planting treatment of terminal : Lead free plating
※ Case material : PBT
※ Weight 4g max

COSEL DC-DC Converters PCB Mount Type

MGFS3

Ordering information

MGF	S	3	24	05	-□
①	②	③	④	⑤	⑧

①Series name
②Single output
③Output wattage
④Input voltage
⑤Output voltage
⑥Optional
Y2: Output voltage adjustable (+10%, -5%)

RoHS

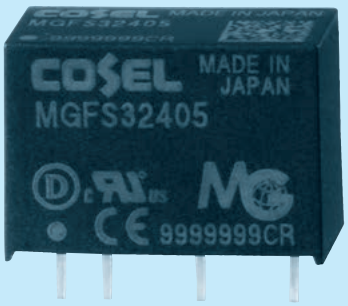

MODEL		MGFS3243R3	MGFS32405	MGFS32412	MGFS32415
MAX OUTPUT WATTAGE[W]		2.64	3.00	3.00	3.00
DC OUTPUT	VOLTAGE[V]	3.3	5	12	15
	CURRENT[A]	0.8	0.6	0.25	0.2

SPECIFICATIONS

	MODEL		MGFS3243R3	MGFS32405	MGFS32412	MGFS32415
INPUT	VOLTAGE[V]		DC9 - 36 (Surge voltage 50V,100ms max) (Refer to “Derating” for input voltage derating.)			
	CURRENT[A]	*1	0.15typ	0.16typ	0.15typ	0.15typ
	EFFICIENCY[%]	*1	78typ	81typ	85typ	84typ
OUTPUT	VOLTAGE[V]		3.3	5	12	15
	CURRENT[A]		0.8	0.6	0.25	0.2
	LINE REGULATION[mV]		20max	20max	48max	60max
	LOAD REGULATION[mV]		20max	20max	48max	60max
	RIPPLE[mVp-p]	*2	120max	120max	150max	150max
	RIPPLE NOISE[mVp-p]	*2	200max	200max	200max	200max
	TEMPERATURE REGULATION[mV]	-20 to +75℃	50max	50max	150max	180max
		-40 to +75℃	80max	80max	240max	290max
	DRIFT[mV]	*3	20max	20max	48max	60max
	START-UP TIME[ms]		30max (Minimum input, Io=100%)			
	OUTPUT VOLTAGE SETTING[V]		3.21 - 3.42	4.90 - 5.21	11.64 - 12.36	14.55 - 15.45
PROTECTION CIRCUIT	OVERCURRENT PROTECTION		Works over 105% of rating and recovers automatically			

MODEL		MGFS3483R3	MGFS34805	MGFS34812	MGFS34815
MAX OUTPUT WATTAGE[W]		2.64	3.00	3.00	3.00
DC OUTPUT	VOLTAGE[V]	3.3	5	12	15
	CURRENT[A]	0.8	0.6	0.25	0.2

SPECIFICATIONS

	MODEL		MGFS3483R3	MGFS34805	MGFS34812	MGFS34815
INPUT	VOLTAGE[V]		DC18 - 76 (Surge voltage 100V,100ms max) (Refer to “Derating” for input voltage derating.)			
	CURRENT[A]	*1	0.072typ	0.079typ	0.076typ	0.076typ
	EFFICIENCY[%]	*1	77typ	80typ	83typ	83typ
OUTPUT	VOLTAGE[V]		3.3	5	12	15
	CURRENT[A]		0.8	0.6	0.25	0.2
	LINE REGULATION[mV]		20max	20max	48max	60max
	LOAD REGULATION[mV]		20max	20max	48max	60max
	RIPPLE[mVp-p]	*2	120max	120max	150max	150max
	RIPPLE NOISE[mVp-p]	*2	200max	200max	200max	200max
	TEMPERATURE REGULATION[mV]	-20 to +75℃	50max	50max	150max	180max
		-40 to +75℃	80max	80max	240max	290max
	DRIFT[mV]	*3	20max	20max	48max	60max
	START-UP TIME[ms]		30max (Minimum input, Io=100%)			
	OUTPUT VOLTAGE SETTING[V]		3.21 - 3.42	4.90 - 5.21	11.64 - 12.36	14.55 - 15.45
PROTECTION CIRCUIT	OVERCURRENT PROTECTION		Works over 105% of rating and recovers automatically			

GENERAL SPECIFICATIONS

ISOLATION	INPUT-OUTPUT	DC1,500V or AC1,000V 1minute, Cutoff current=10mA, DC500V 1,000MΩ min (20±15℃)
ENVIRONMENT	OPERATING TEMP.,HUMID.AND ALTITUDE	-40 to +85℃, 20 to 95%RH (Non condensing) (Refer to "Derating"), 5,000m (16,400feet) max
	STORAGE TEMP.,HUMID.AND ALTITUDE	-40 to +100℃, 20 to 95%RH (Non condensing), 9,000m (30,000feet) max
	VIBRATION	10 - 55Hz 98.0m/s² (10G), 3minute period, 60minutes each along X, Y and Z axis
	IMPACT	490.3m/s² (50G) 11ms, once each along X, Y and Z axis
SAFETY	AGENCY APPROVALS	UL60950-1, C-UL, EN62368-1
OTHERS	CASE SIZE/WEIGHT	17.0×12.0×8.5mm [0.67×0.48×0.34 inches] (W×H×D) / 4g max
	COOLING METHOD	Convection/Forced air

*1 Rated input 24V or 48V DC Io=100%
*2 Ripple and ripple noise is measured by using test board with ceramic capacitor 1μF at 50mm from output pins.
*3 Drift is the DC output accuracy for eight hours period after a half-hour warm-up at 25℃.
* Parallel operation with other model is not possible.
* MGFW3xx12/MGFW3xx15 is available as single output, +24V/+30V

External view

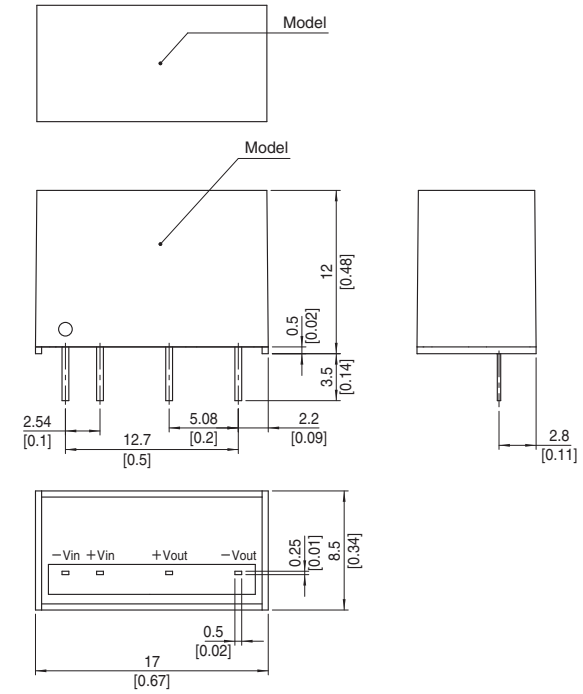

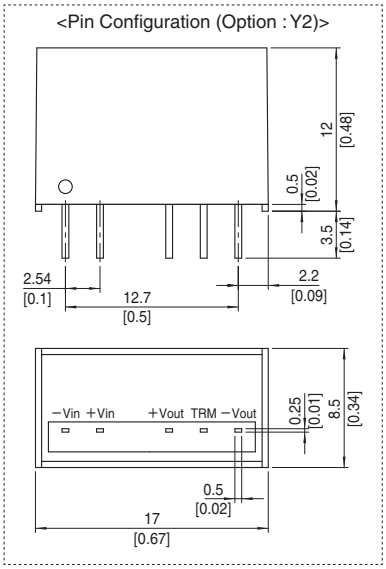

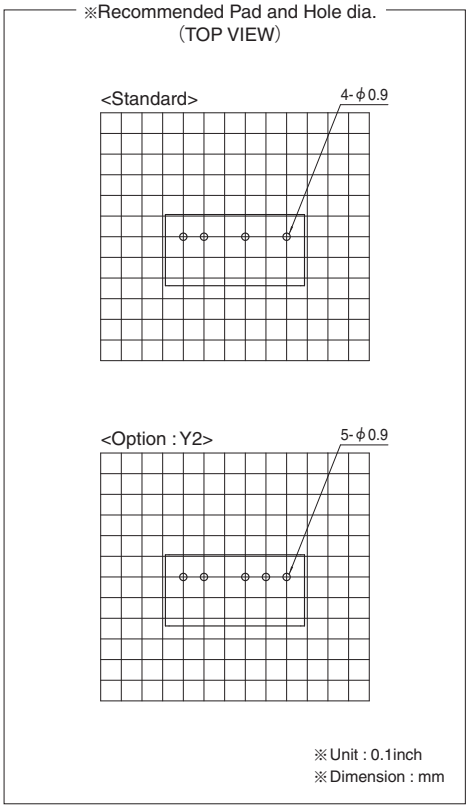

※ Tolerance ±0.5 [±0.02]
※ Dimensions in mm, [ ]= inches
※ Pin terminal material : Copper
※ Planting treatment of terminal : Lead free plating
※ Case material : PBT
※ Weight 4g max

COSEL DC-DC Converters PCB Mount Type

MGFW3

Ordering information

MGF	W	3	24	12	-□
①	②	③	④	⑤	⑥

①Series name
②Dual output
③Output wattage
④Input voltage
⑤Output voltage
⑥Optional

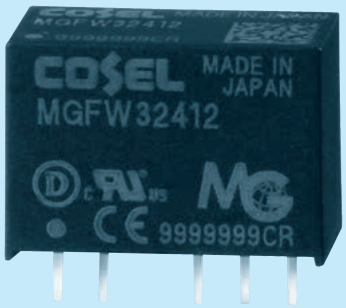

MODEL		MGFW32412	MGFW32415	MGFW34812	MGFW34815
MAX OUTPUT WATTAGE[W]		3.12	3.00	3.12	3.00
DC OUTPUT	VOLTAGE[V] ※1	±12 or +24	±15 or +30	±12 or +24	±15 or +30
	CURRENT[A]	0.13	0.1	0.13	0.1

SPECIFICATIONS

	MODEL		MGFW32412	MGFW32415	MGFW34812	MGFW34815
INPUT	VOLTAGE[V]		DC9 - 36 (Surge voltage 50V,100ms max) (Refer to "Derating" for input voltage derating.)		DC18 - 76 (Surge voltage 100V,100ms max) (Refer to "Derating" for input voltage derating.)	
	CURRENT[A]	※2	0.16typ	0.16typ	0.081typ	0.078typ
	EFFICIENCY[%]	※2	82typ	82typ	81typ	81typ
OUTPUT	VOLTAGE[V]		±12 (+24)	±15 (+30)	±12 (+24)	±15 (+30)
	CURRENT[A]		0.13	0.1	0.13	0.1
	LINE REGULATION[mV]		60max	75max	60max	75max
	LOAD REGULATION[mV]	※3	480max	600max	480max	600max
		※4	600max	750max	600max	750max
	RIPPLE[mVp-p]	※5	150max	150max	150max	150max
	RIPPLE NOISE[mVp-p]	※5	200max	200max	200max	200max
	TEMPERATURE REGULATION[mV]	-20 to +70℃	180max	220max	180max	220max
		-40 to +70℃	290max	340max	290max	340max
	DRIFT[mV]	※6	48max	60max	48max	60max
	START-UP TIME[ms]		30max (Minimum input, Io=100%)			
	OUTPUT VOLTAGE SETTING[V]		11.64 - 12.36	14.55 - 15.45	11.64 - 12.36	14.55 - 15.45
PROTECTION CIRCUIT	OVERCURRENT PROTECTION		Works over 105% of rating and recovers automatically			
ISOLATION	INPUT-OUTPUT		DC1,500V or AC1,000V 1minute, Cutoff current=10mA, DC500V 1,000MΩ min (20±15℃)			
ENVIRONMENT	OPERATING TEMP.,HUMID.AND ALTITUDE		-40 to +85℃, 20 to 95%RH (Non condensing) (Refer to "Derating"), 5,000m (16,400feet) max			
	STORAGE TEMP.,HUMID.AND ALTITUDE		-40 to +100℃, 20 to 95%RH (Non condensing), 9,000m (30,000feet) max			
	VIBRATION		10 - 55Hz 98.0m/s² (10G), 3minute period, 60minutes each along X, Y and Z axis			
	IMPACT		490.3m/s² (50G) 11ms, once each along X, Y and Z axis			
SAFETY	AGENCY APPROVALS		UL60950-1, C-UL, EN62368-1			
OTHERS	CASE SIZE/WEIGHT		17.0×12.0×8.5mm [0.67×0.48×0.34 inches] (W×H×D) / 4g max			
	COOLING METHOD		Convection/Forced air			

※1 Single output +24V, +30V with no use of COM.
※2 Rated input 24V or 48V DC Io=100%
※3 Symmetrical loading from 20% to 100%.
※4 Symmetrical loading from 0% to 100%.
※5 Ripple and Ripple Noise is measured by using test board with ceramic capacitor 1μF at 50mm from output pins.
※6 Drift is the DC output accuracy for eight hours period after a half-hour warm-up at 25℃.
※ Parallel operation with other model is not possible.

External view

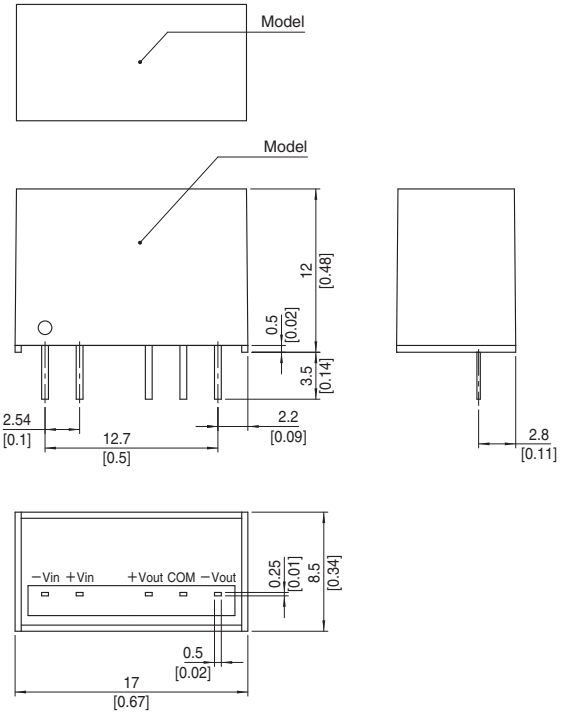

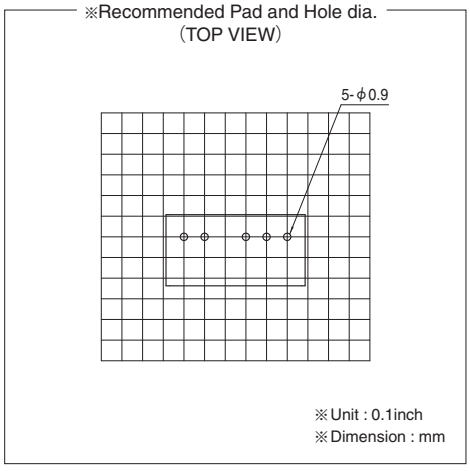

※ Tolerance ±0.5 [±0.02]
※ Dimensions in mm, [ ]= inches
※ Pin terminal material : Copper
※ Planting treatment of terminal : Lead free plating
※ Case material : PBT
※ Weight 4g max

MGFS6

Ordering information

MGF	S	6	24	05	-□
①	②	③	④	⑤	⑥

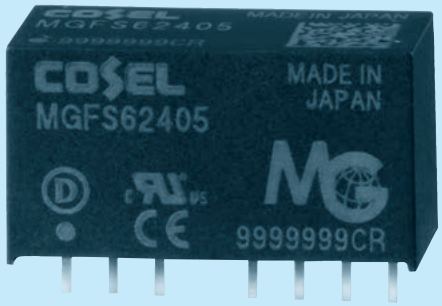

①Series name
②Single output
③Output wattage
④Input voltage
⑤Output voltage
⑥Optional
Y2: Output voltage adjustable (+10%, -5%)

MODEL		MGFS6243R3	MGFS62405	MGFS62412	MGFS62415
MAX OUTPUT WATTAGE[W]		5.28	6.0	6.0	6.0
DC OUTPUT	VOLTAGE[V]	3.3	5	12	15
	CURRENT[A]	1.6	1.2	0.5	0.4

SPECIFICATIONS

	MODEL		MGFS6243R3	MGFS62405	MGFS62412	MGFS62415
INPUT	VOLTAGE[V]		DC9 - 36 (Surge voltage 50V,100ms max)			
	CURRENT[A]	*1	0.28typ	0.30typ	0.29typ	0.29typ
	EFFICIENCY[%]	*1	80typ	84typ	88typ	88typ
OUTPUT	VOLTAGE[V]		3.3	5	12	15
	CURRENT[A]		1.6	1.2	0.5	0.4
	LINE REGULATION[mV]		20max	20max	48max	60max
	LOAD REGULATION[mV]		20max	20max	48max	60max
	RIPPLE[mVp-p]	Io=30% - *2	75max	75max	100max	100max
		Io=0 - 30% *2	225max	225max	300max	300max
	RIPPLE NOISE[mVp-p]	Io=30% - *2	120max	120max	150max	150max
		Io=0 - 30% *2	300max	300max	400max	400max
	TEMPERATURE REGULATION[mV]	-20 to +65℃	50max	50max	150max	180max
		-40 to +65℃	80max	80max	240max	290max
	DRIFT[mV]	*3	20max	20max	48max	60max
	START-UP TIME[ms]		30max (Minimum input, Io=100%)			
	OUTPUT VOLTAGE SETTING[V]		3.21 - 3.42	4.90 - 5.21	11.64 - 12.36	14.55 - 15.45
PROTECTION CIRCUIT AND OTHERS	OVERCURRENT PROTECTION		Works over 105% of rating and recovers automatically			
	REMOTE ON/OFF		Provided (Negative logic L : ON, H : OFF)			

MODEL		MGFS6483R3	MGFS64805	MGFS64812	MGFS64815
MAX OUTPUT WATTAGE[W]		5.28	6.0	6.0	6.0
DC OUTPUT	VOLTAGE[V]	3.3	5	12	15
	CURRENT[A]	1.6	1.2	0.5	0.4

SPECIFICATIONS

	MODEL		MGFS6483R3	MGFS64805	MGFS64812	MGFS64815
INPUT	VOLTAGE[V]		DC18 - 76 (Surge voltage 100V, 100ms max)			
	CURRENT[A]	*1	0.14typ	0.15typ	0.15typ	0.15typ
	EFFICIENCY[%]	*1	80typ	84typ	88typ	88typ
OUTPUT	VOLTAGE[V]		3.3	5	12	15
	CURRENT[A]		1.6	1.2	0.5	0.4
	LINE REGULATION[mV]		20max	20max	48max	60max
	LOAD REGULATION[mV]		20max	20max	48max	60max
	RIPPLE[mVp-p]	Io=30% - *2	75max	75max	100max	100max
		Io=0 - 30% *2	225max	225max	300max	300max
	RIPPLE NOISE[mVp-p]	Io=30% - *2	120max	120max	150max	150max
		Io=0 - 30% *2	300max	300max	400max	400max
	TEMPERATURE REGULATION[mV]	-20 to +65℃	50max	50max	150max	180max
		-40 to +65℃	80max	80max	240max	290max
	DRIFT[mV]	*3	20max	20max	48max	60max
	START-UP TIME[ms]		30max (Minimum input, Io=100%)			
	OUTPUT VOLTAGE SETTING[V]		3.21 - 3.42	4.90 - 5.21	11.64 - 12.36	14.55 - 15.45
PROTECTION CIRCUIT AND OTHERS	OVERCURRENT PROTECTION		Works over 105% of rating and recovers automatically			
	REMOTE ON/OFF		Provided (Negative logic L : ON, H : OFF)			

GENERAL SPECIFICATIONS

ISOLATION	INPUT-OUTPUT	DC1,500V or AC1,000V 1minute, Cutoff current=10mA, DC500V 1,000MΩ min (20±15℃)
ENVIRONMENT	OPERATING TEMP.,HUMID.AND ALTITUDE	-40 to +85℃, 20 to 95%RH (Non condensing) (Refer to "Derating"), 5,000m (16,400feet) max
	STORAGE TEMP.,HUMID.AND ALTITUDE	-40 to +100℃, 20 to 95%RH (Non condensing), 9,000m (30,000feet) max
	VIBRATION	10 - 55Hz 98.0m/s² (10G), 3minute period, 60minutes each along X, Y and Z axis
	IMPACT	490.3m/s² (50G) 11ms, once each along X, Y and Z axis
SAFETY	AGENCY APPROVALS	UL60950-1, C-UL, EN62368-1
OTHERS	CASE SIZE/WEIGHT	22.0×12.0×9.5mm [0.87×0.48×0.38 inches] (W×H×D) / 7g max
	COOLING METHOD	Convection/Forced air

*1 Rated input 24V or 48V DC Io=100%
*2 Ripple and ripple noise is measured by using test board with ceramic capacitor 1μF at 50mm from output pins.
*3 Drift is the DC output accuracy for eight hours period after a half-hour warm-up at 25℃.
* Parallel operation with other model is not possible.
* MGFW6xx12/MGFW6xx15 is available as single output, +24V/+30V

External view

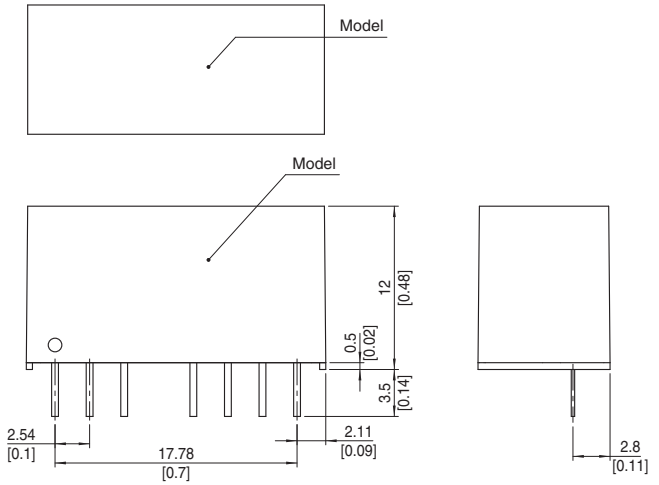

※Recommended Pad and Hole dia.
(TOP VIEW)

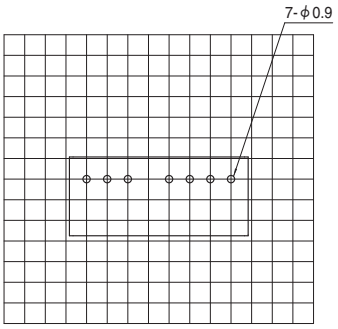

※Unit : 0.1inch
※Dimension : mm

※ Tolerance ±0.5 [±0.02]
※ Dimensions in mm, [ ]= inches
※ Pin terminal material : Copper
※ Planting treatment of terminal : Lead free plating
※ Case material : PBT
※ Weight 7g max

<Pin Configuration (Option : Y2)>

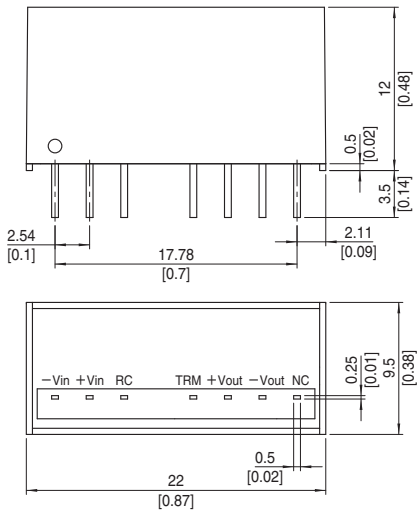

COSEL DC-DC Converters PCB Mount Type

MGFW6

Ordering information

MGF	W	6	24	12	-□
①	②	③	④	⑤	⑥

①Series name
②Dual output
③Output wattage
④Input voltage
⑤Output voltage
⑥Optional
Y2: Output voltage adjustable (+10%, -5%)

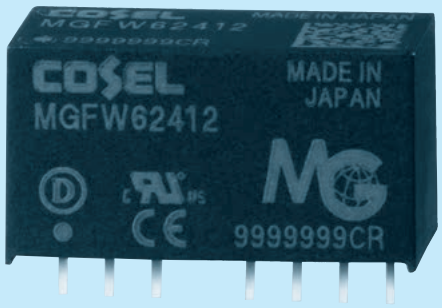

MODEL			MGFW62412	MGFW62415	MGFW64812	MGFW64815
MAX OUTPUT WATTAGE[W]			6.00	6.00	6.00	6.00
DC OUTPUT	VOLTAGE[V]	*1	±12 or +24	±15 or +30	±12 or +24	±15 or +30
	CURRENT[A]		0.25	0.2	0.25	0.2

SPECIFICATIONS

	MODEL		MGFW62412	MGFW62415	MGFW64812	MGFW64815
INPUT	VOLTAGE[V]		DC9 - 36 (Surge voltage 50V,100ms max)		DC18 - 76 (Surge voltage 100V,100ms max)	
	CURRENT[A]	*2	0.29typ	0.29typ	0.15typ	0.15typ
	EFFICIENCY[%]	*2	87typ	88typ	88typ	88typ
OUTPUT	VOLTAGE[V]		±12 (+24)	±15 (+30)	±12 (+24)	±15 (+30)
	CURRENT[A]		0.25	0.2	0.25	0.2
	LINE REGULATION[mV]		60max	75max	60max	75max
	LOAD REGULATION[mV]	*3	480max	600max	480max	600max
		*4	600max	750max	600max	750max
	RIPPLE[mVp-p] *5	Po=30% -	120max	120max	120max	120max
		Po=0 - 30%	360max	360max	360max	360max
	RIPPLE NOISE[mVp-p] *5	Po=30% -	200max	200max	200max	200max
		Po=0 - 30%	500max	500max	500max	500max
	TEMPERATURE REGULATION[mV]	-20 to +75℃	190max	230max	190max	230max
		-40 to +75℃	300max	360max	300max	360max
	DRIFT[mV]	*6	48max	60max	48max	60max
	START-UP TIME[ms]		30max (Minimum input, Io=100%)			
	OUTPUT VOLTAGE SETTING[V]		11.64 - 12.36	14.55 - 15.45	11.64 - 12.36	14.55 - 15.45
PROTECTION CIRCUIT AND OTHERS	OVERCURRENT PROTECTION		Works over 105% of rating and recovers automatically			
	REMOTE ON/OFF		Provided (Negative logic L : ON, H : OFF)			
ISOLATION	INPUT-OUTPUT		DC1,500V or AC1,000V 1minute, Cutoff current=10mA, DC500V 1,000MΩ min (20±15℃)			
ENVIRONMENT	OPERATING TEMP.,HUMID.AND ALTITUDE		-40 to +85℃, 20 to 95%RH (Non condensing) (Refer to "Derating"), 5,000m (16,400feet) max			
	STORAGE TEMP.,HUMID.AND ALTITUDE		-40 to +100℃, 20 to 95%RH (Non condensing), 9,000m (30,000feet) max			
	VIBRATION		10 - 55Hz 98.0m/s² (10G), 3minute period, 60minutes each along X, Y and Z axis			
	IMPACT		490.3m/s² (50G) 11ms, once each along X, Y and Z axis			
SAFETY	AGENCY APPROVALS		UL60950-1, C-UL, EN62368-1			
OTHERS	CASE SIZE/WEIGHT		22.0×12.0×9.5mm [0.87×0.48×0.38 inches] (W×H×D) / 7g max			
	COOLING METHOD		Convection/Forced air			

*1 Single output +24V, +30V with no use of COM.
*2 Rated input 5V, 12V, 24V or 48V DC Io=100%
*3 Symmetrical loading from 20% to 100%.
*4 Symmetrical loading from 0% to 100%.
*5 Ripple and Ripple Noise is measured by using test board with ceramic capacitor 1μF at 50mm from output pins. Po:Output wattage.
*6 Drift is the DC output accuracy for eight hours period after a half-hour warm-up at 25℃.
* Parallel operation with other model is not possible.

External view

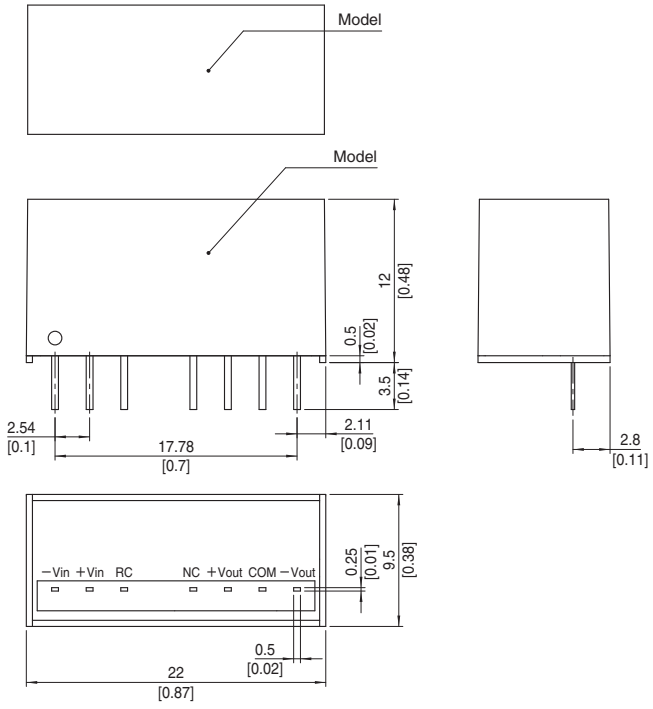

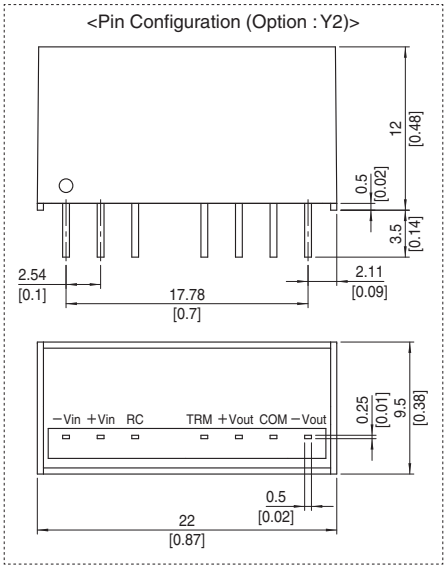

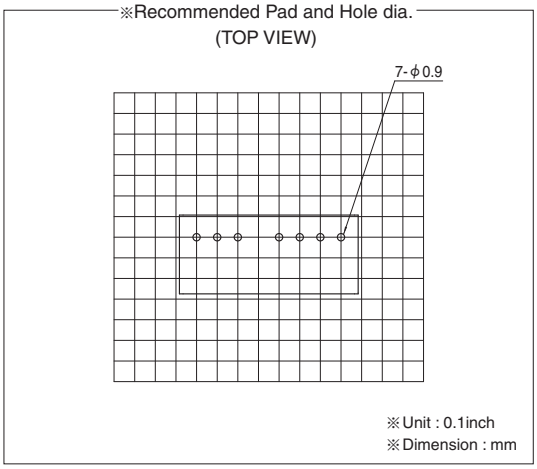

※ Tolerance ±0.5 [±0.02]
※ Dimensions in mm, [ ]= inches
※ Pin terminal material : Copper
※ Planting treatment of terminal : Lead free plating
※ Case material : PBT
※ Weight 7g max

COSEL DC-DC Converters PCB Mount Type

MGFS10

Ordering information

MGF	S	10	24	05	-□
①	②	③	④	⑤	⑥

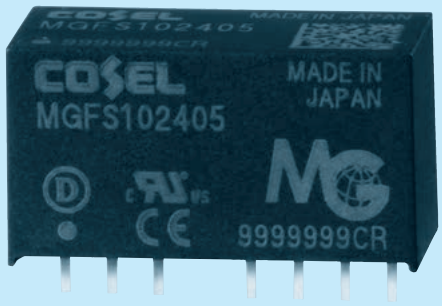

①Series name
②Single output
③Output wattage
④Input voltage
⑤Output voltage
⑥Optional
Y2: Output voltage adjustable (+10%, -5%)

MODEL		MGFS10243R3	MGFS102405	MGFS102412	MGFS102415
MAX OUTPUT WATTAGE[W]		8.58	10.0	10.8	10.5
DC OUTPUT	VOLTAGE[V]	3.3	5	12	15
	CURRENT[A]	2.6	2.0	0.9	0.7

SPECIFICATIONS

	MODEL		MGFS10243R3	MGFS102405	MGFS102412	MGFS102415
INPUT	VOLTAGE[V]		DC9 - 36 (Surge voltage 50V,100ms max) (Refer to “Derating” for input voltage derating.)			
	CURRENT[A]	*1	0.42typ	0.48typ	0.51typ	0.50typ
	EFFICIENCY[%]	*1	86typ	88typ	89typ	89typ
OUTPUT	VOLTAGE[V]		3.3	5	12	15
	CURRENT[A]		2.6	2.0	0.9	0.7
	LINE REGULATION[mV]		20max	20max	48max	60max
	LOAD REGULATION[mV]		20max	20max	48max	60max
	RIPPLE[mVp-p]	Io=30% -	75max	75max	100max	100max
		*2 Io=0 - 30%	225max	225max	300max	300max
	RIPPLE NOISE[mVp-p]	Io=30% -	120max	120max	150max	150max
		*2 Io=0 - 30%	300max	300max	400max	400max
	TEMPERATURE REGULATION[mV]	-20 to +55℃	50max	50max	150max	180max
		-40 to +55℃	80max	80max	240max	290max
	DRIFT[mV]	*3	20max	20max	48max	60max
	START-UP TIME[ms]		30max (Minimum input, Io=100%)			
	OUTPUT VOLTAGE SETTING[V]		3.21 - 3.42	4.90 - 5.21	11.64 - 12.36	14.55 - 15.45
PROTECTION CIRCUIT AND OTHERS	OVERCURRENT PROTECTION		Works over 105% of rating and recovers automatically			
	REMOTE ON/OFF		Provided (Negative logic L : ON, H : OFF)			

MODEL		MGFS10483R3	MGFS104805	MGFS104812	MGFS104815
MAX OUTPUT WATTAGE[W]		8.58	10.0	10.8	10.5
DC OUTPUT	VOLTAGE[V]	3.3	5	12	15
	CURRENT[A]	2.6	2.0	0.9	0.7

SPECIFICATIONS

	MODEL		MGFS10483R3	MGFS104805	MGFS104812	MGFS104815
INPUT	VOLTAGE[V]		DC18 - 76 (Surge voltage 100V,100ms max) (Refer to “Derating” for input voltage derating.)			
	CURRENT[A]	*1	0.21typ	0.24typ	0.26typ	0.25typ
	EFFICIENCY[%]	*1	86typ	88typ	89typ	89typ
OUTPUT	VOLTAGE[V]		3.3	5	12	15
	CURRENT[A]		2.6	2.0	0.9	0.7
	LINE REGULATION[mV]		20max	20max	48max	60max
	LOAD REGULATION[mV]		20max	20max	48max	60max
	RIPPLE[mVp-p]	Io=30% -	75max	75max	100max	100max
		*2 Io=0 - 30%	225max	225max	300max	300max
	RIPPLE NOISE[mVp-p]	Io=30% -	120max	120max	150max	150max
		*2 Io=0 - 30%	300max	300max	400max	400max
	TEMPERATURE REGULATION[mV]	-20 to +55℃	50max	50max	150max	180max
		-40 to +55℃	80max	80max	240max	290max
	DRIFT[mV]	*3	20max	20max	48max	60max
	START-UP TIME[ms]		30max (Minimum input, Io=100%)			
	OUTPUT VOLTAGE SETTING[V]		3.21 - 3.42	4.90 - 5.21	11.64 - 12.36	14.55 - 15.45
PROTECTION CIRCUIT AND OTHERS	OVERCURRENT PROTECTION		Works over 105% of rating and recovers automatically			
	REMOTE ON/OFF		Provided (Negative logic L : ON, H : OFF)			

GENERAL SPECIFICATIONS

ISOLATION	INPUT-OUTPUT	DC1,500V or AC1,000V 1minute, Cutoff current=10mA, DC500V 1,000MΩ min (20±15℃)
ENVIRONMENT	OPERATING TEMP.,HUMID.AND ALTITUDE	-40 to +85℃, 20 to 95%RH (Non condensing) (Refer to "Derating"), 5,000m (16,400feet) max
	STORAGE TEMP.,HUMID.AND ALTITUDE	-40 to +100℃, 20 to 95%RH (Non condensing), 9,000m (30,000feet) max
	VIBRATION	10 - 55Hz 98.0m/s² (10G), 3minute period, 60minutes each along X, Y and Z axis
	IMPACT	490.3m/s² (50G) 11ms, once each along X, Y and Z axis
SAFETY	AGENCY APPROVALS	UL60950-1, C-UL, EN62368-1
OTHERS	CASE SIZE/WEIGHT	22.0×12.0×9.5mm [0.87×0.48×0.38 inches] (W×H×D) / 7g max
	COOLING METHOD	Convection/Forced air

*1 Rated input 24V or 48V DC Io=100%
*2 Ripple and ripple noise is measured by using test board with ceramic capacitor 1μF at 50mm from output pins.
*3 Drift is the DC output accuracy for eight hours period after a half-hour warm-up at 25℃.
* Parallel operation with other model is not possible.
* MGFW10xx12/MGFW10xx15 is available as single output, +24V/+30V

External view

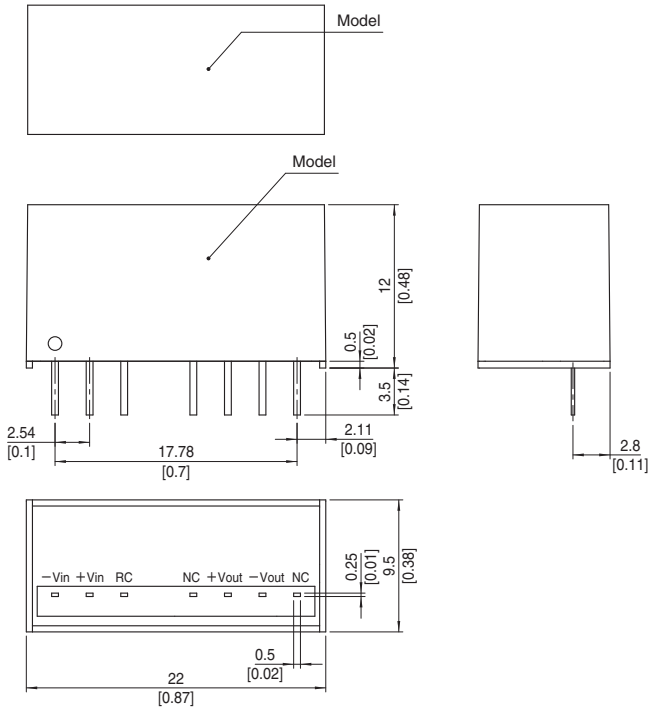

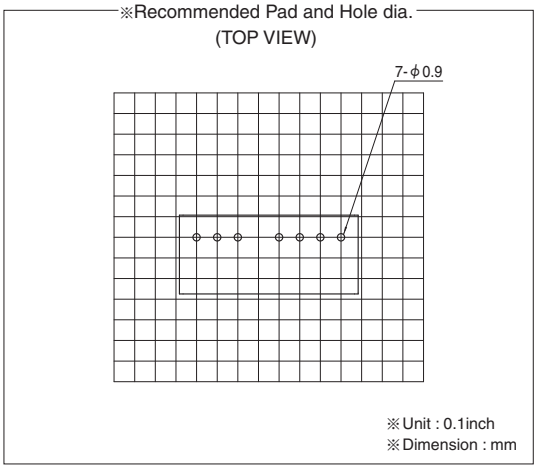

※ Tolerance ±0.5 [±0.02]
※ Dimensions in mm, [ ]= inches
※ Pin terminal material : Copper
※ Planting treatment of terminal : Lead free plating
※ Case material : PBT
※ Weight 7g max

<Pin Configuration (Option : Y2)>

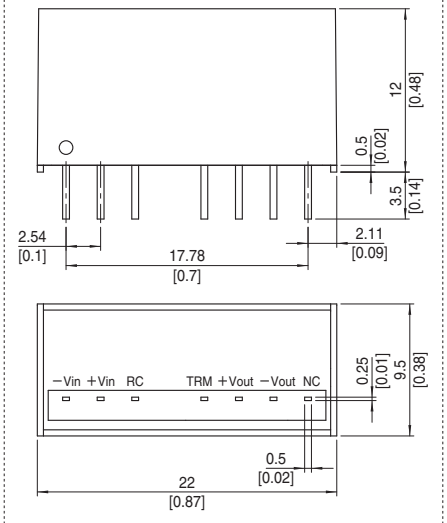

COSEL DC-DC Converters PCB Mount Type

MGFW10

Ordering information

MGF	W	10	24	12	-□
①	②	③	④	⑤	⑥

①Series name
②Dual output
③Output wattage
④Input voltage
⑤Output voltage
⑥Optional
Y2: Output voltage adjustable (+10%, -5%)

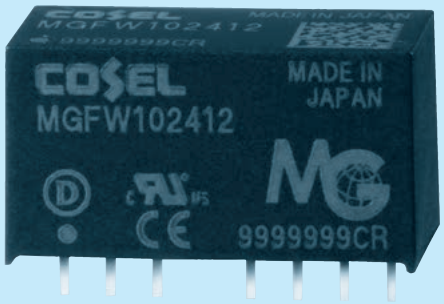

MODEL		MGFW102412	MGFW102415	MGFW104812	MGFW104815
MAX OUTPUT WATTAGE[W]		10.08	10.20	10.08	10.20
DC OUTPUT	VOLTAGE[V] *1	±12 or +24	±15 or +30	±12 or +24	±15 or +30
	CURRENT[A]	0.42	0.34	0.42	0.34

SPECIFICATIONS

	MODEL		MGFW102412	MGFW102415	MGFW104812	MGFW104815
INPUT	VOLTAGE[V]		DC9 - 36 (Surge voltage 50V,100ms max) (Refer to "Derating" for input voltage derating.)		DC18 - 76 (Surge voltage 100V,100ms max) (Refer to "Derating" for input voltage derating.)	
	CURRENT[A]	*2	0.49typ	0.49typ	0.25typ	0.25typ
	EFFICIENCY[%]	*2	87typ	87typ	87typ	88typ
OUTPUT	VOLTAGE[V]		±12 (+24)	±15 (+30)	±12 (+24)	±15 (+30)
	CURRENT[A]		0.42	0.34	0.42	0.34
	LINE REGULATION[mV]		60max	75max	60max	75max
	LOAD REGULATION[mV]	*3	480max	600max	480max	600max
		*4	600max	750max	600max	750max
	RIPPLE[mVp-p] *5	Po=30% -	120max	120max	120max	120max
		Po=0 - 30%	360max	360max	360max	360max
	RIPPLE NOISE[mVp-p] *5	Po=30% -	200max	200max	200max	200max
		Po=0 - 30%	500max	500max	500max	500max
	TEMPERATURE REGULATION[mV]	-20 to +50℃	150max	180max	150max	180max
		-40 to +50℃	240max	290max	240max	290max
	DRIFT[mV]	*6	48max	60max	48max	60max
	START-UP TIME[ms]		30max (Minimum input, Io=100%)			
	OUTPUT VOLTAGE SETTING[V]		11.64 - 12.36	14.55 - 15.45	11.64 - 12.36	14.55 - 15.45
PROTECTION CIRCUIT AND OTHERS	OVERCURRENT PROTECTION		Works over 105% of rating and recovers automatically			
	REMOTE ON/OFF		Provided (Negative logic L : ON, H : OFF)			
ISOLATION	INPUT-OUTPUT		DC1,500V or AC1,000V 1minute, Cutoff current=10mA, DC500V 1,000MΩ min (20±15℃)			
ENVIRONMENT	OPERATING TEMP.,HUMID.AND ALTITUDE		-40 to +85℃, 20 to 95%RH (Non condensing) (Refer to "Derating"), 5,000m (16,400feet) max			
	STORAGE TEMP.,HUMID.AND ALTITUDE		-40 to +100℃, 20 to 95%RH (Non condensing), 9,000m (30,000feet) max			
	VIBRATION		10 - 55Hz 98.0m/s² (10G), 3minute period, 60minutes each along X, Y and Z axis			
	IMPACT		490.3m/s² (50G) 11ms, once each along X, Y and Z axis			
SAFETY	AGENCY APPROVALS		UL60950-1, C-UL, EN62368-1			
OTHERS	CASE SIZE/WEIGHT		22.0×12.0×9.5mm [0.87×0.48×0.38 inches] (WXHXD) / 7g max			
	COOLING METHOD		Convection/Forced air			

*1 Single output +24V, +30V with no use of COM.
*2 Rated input 5V, 12V, 24V or 48V DC Io=100%
*3 Symmetrical loading from 20% to 100%.
*4 Symmetrical loading from 0% to 100%.
*5 Ripple and Ripple Noise is measured by using test board with ceramic capacitor 1μF at 50mm from output pins. Po:Output wattage.
*6 Drift is the DC output accuracy for eight hours period after a half-hour warm-up at 25℃.
* Parallel operation with other model is not possible.

External view

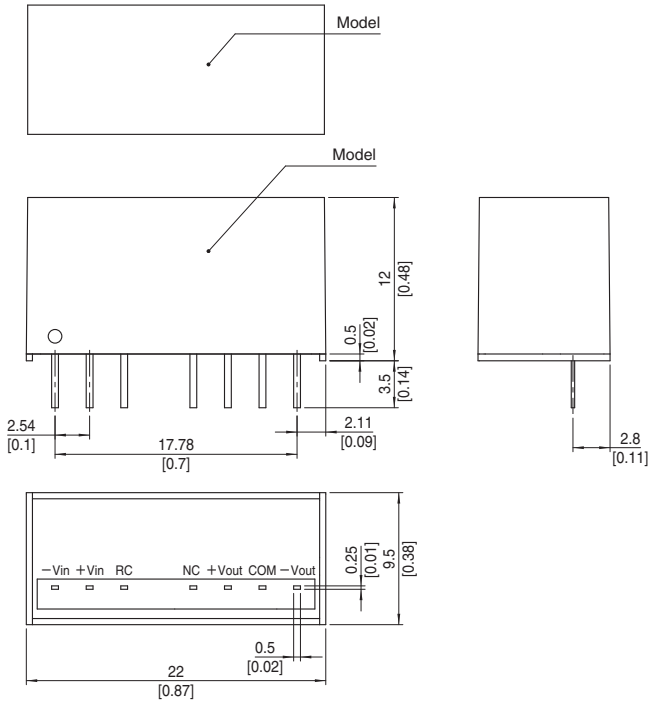

※Recommended Pad and Hole dia.
(TOP VIEW)

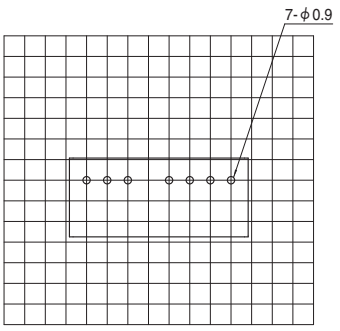

※Unit : 0.1inch
※Dimension : mm

※ Tolerance ±0.5 [±0.02]
※ Dimensions in mm, [ ]= inches
※ Pin terminal material : Copper
※ Planting treatment of terminal : Lead free plating
※ Case material : PBT
※ Weight 7g max

<Pin Configuration (Option : Y2)>

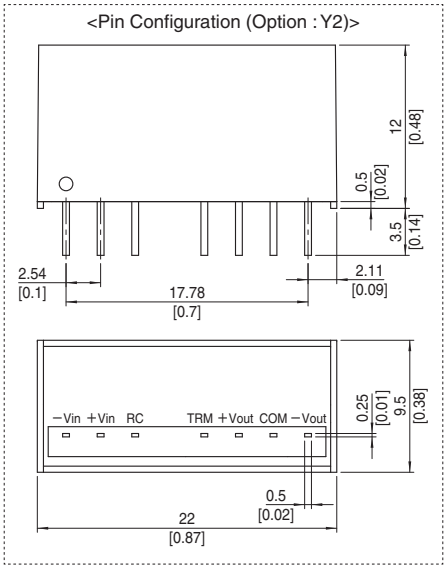

COSEL DC-DC Converters PCB Mount Type

MGXS1R5

Ordering information

MGX	S	1R5	24	05	-□
①	②	③	④	⑤	⑥

①Series name
②Single output
③Output wattage
④Input voltage
⑤Output voltage
⑥Optional
Y2: Output voltage adjustable (+10%, -5%)

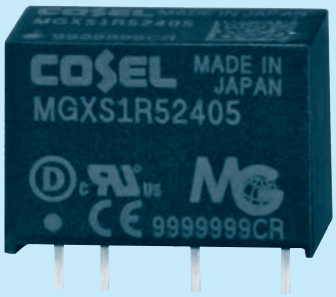

MODEL		MGXS1R5243R3	MGXS1R52405	MGXS1R52412	MGXS1R52415
MAX OUTPUT WATTAGE[W]		1.32	1.50	1.56	1.50
DC OUTPUT	VOLTAGE[V]	3.3	5	12	15
	CURRENT[A]	0.4	0.3	0.13	0.1

SPECIFICATIONS

	MODEL		MGXS1R5243R3	MGXS1R52405	MGXS1R52412	MGXS1R52415
INPUT	VOLTAGE[V]		DC6 - 60 (Surge voltage 76V, 100ms max) (Refer to "Derating" for input voltage derating.)			
	CURRENT[A]	*1	0.072typ	0.080typ	0.080typ	0.077typ
	EFFICIENCY[%]	*1	77typ	79typ	82typ	82typ
OUTPUT	VOLTAGE[V]		3.3	5	12	15
	CURRENT[A]		0.4	0.3	0.13	0.1
	LINE REGULATION[mV]		20max	20max	48max	60max
	LOAD REGULATION[mV]		20max	20max	48max	60max
	RIPPLE[mVp-p]	*2	120max	120max	150max	150max
	RIPPLE NOISE[mVp-p]	*2	200max	200max	200max	200max
	TEMPERATURE REGULATION[mV]	-20 to +85℃	50max	50max	150max	180max
		-40 to +85℃	80max	80max	240max	290max
	DRIFT[mV]	*3	20max	20max	48max	60max
	START-UP TIME[ms]		30max			
	OUTPUT VOLTAGE SETTING[V]		3.21 - 3.42	4.90 - 5.21	11.64 - 12.36	14.55 - 15.45
PROTECTION CIRCUIT	OVERCURRENT PROTECTION		Works over 105% of rating and recovers automatically			

GENERAL SPECIFICATIONS

ISOLATION	INPUT-OUTPUT	DC1,500V or AC1,000V 1minute, Cutoff current=10mA, DC500V 1,000MΩ min (20±15℃)
ENVIRONMENT	OPERATING TEMP.,HUMID.AND ALTITUDE	-40 to +85℃, 20 to 95%RH (Non condensing) (Refer to "Derating"), 5,000m (16,400feet) max
	STORAGE TEMP.,HUMID.AND ALTITUDE	-40 to +100℃, 20 to 95%RH (Non condensing), 9,000m (30,000feet) max
	VIBRATION	10 - 55Hz 98.0m/s² (10G), 3minute period, 60minutes each along X, Y and Z axis
	IMPACT	490.3m/s² (50G) 11ms, once each along X, Y and Z axis
SAFETY	AGENCY APPROVALS	UL60950-1, C-UL, EN62368-1
OTHERS	CASE SIZE/WEIGHT	17.0×12.0×8.5mm [0.67×0.48×0.34 inches] (W×H×D) / 4g max
	COOLING METHOD	Convection/Forced air

*1 Rated input 24V DC Io=100%
*2 Ripple and ripple noise is measured by using test board with ceramic capacitor 1μF at 50mm from output pins.
*3 Drift is the DC output accuracy for eight hours period after a half-hour warm-up at 25℃.
* Parallel operation with other model is not possible.
* MGXW1R52412/MGXW1R52415 is available as single output, +24V/+30V

External view

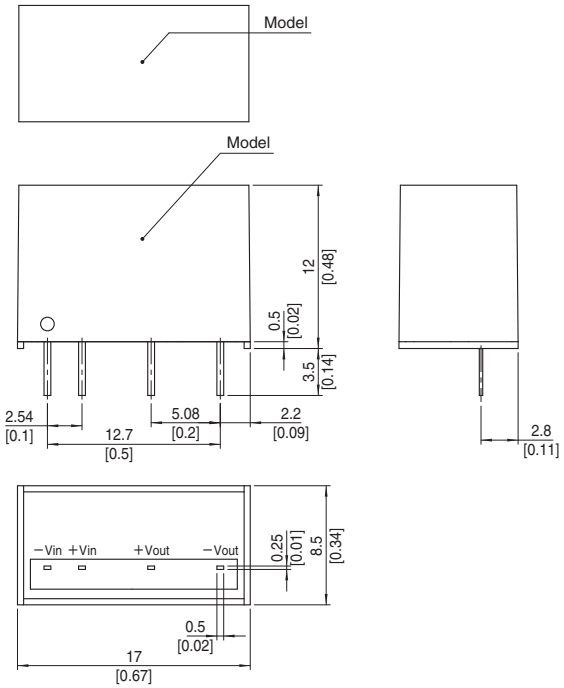

<Pin Configuration (Option : Y2)>

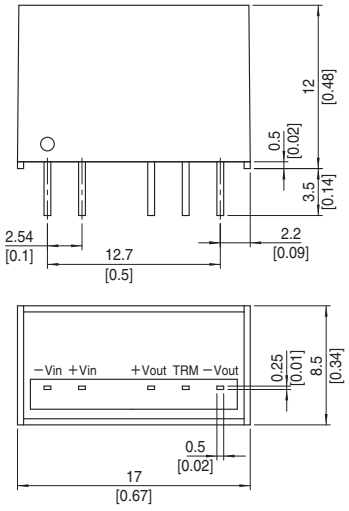

※Recommended Pad and Hole dia.
(TOP VIEW)

<Standard>

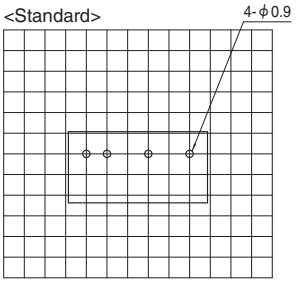

<Option : Y2>

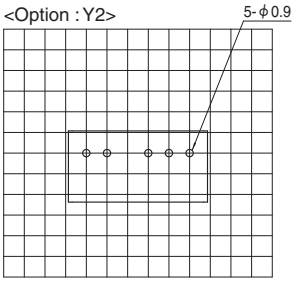

※Unit : 0.1inch
※Dimension : mm

※ Tolerance ±0.5 [±0.02]
※ Dimensions in mm, [ ]= inches
※ Pin terminal material : Copper
※ Planting treatment of terminal : Lead free plating
※ Case material : PBT
※ Weight 4g max

COSEL DC-DC Converters PCB Mount Type

MGXW1R5

Ordering information

MGX	W	1R5	24	12	-□
①	②	③	④	⑤	⑥

①Series name
②Dual output
③Output wattage
④Input voltage
⑤Output voltage
⑥Optional

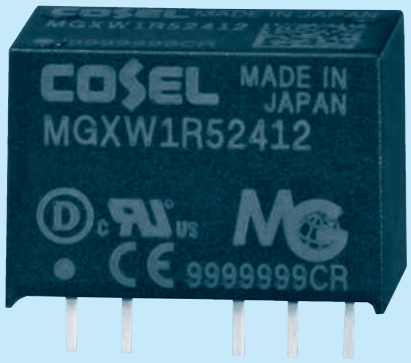

MODEL			MGXW1R52412	MGXW1R52415
MAX OUTPUT WATTAGE[W]			1.56	1.50
DC OUTPUT	VOLTAGE[V]	∗1	±12 or +24	±15 or +30
	CURRENT[A]		0.065	0.05

SPECIFICATIONS

	MODEL		MGXW1R52412	MGXW1R52415
INPUT	VOLTAGE[V]		DC6 - 60 (Surge voltage 76V, 100ms max) (Refer to “Derating” for input voltage derating.)	
	CURRENT[A]	∗2	0.082typ	0.079typ
	EFFICIENCY[%]	∗2	80typ	80typ
OUTPUT	VOLTAGE[V]		±12 (+24)	±15 (+30)
	CURRENT[A]		0.065	0.05
	LINE REGULATION[mV]		60max	75max
	LOAD REGULATION[mV]	∗3	480max	600max
		∗4	600max	750max
	RIPPLE[mVp-p]	∗5	150max	150max
	RIPPLE NOISE[mVp-p]	∗5	200max	200max
	TEMPERATURE REGULATION[mV]	-20 to +85℃	210max	260max
		-40 to +85℃	320max	390max
	DRIFT[mV]	∗6	48max	60max
	START-UP TIME[ms]		30max	
	OUTPUT VOLTAGE SETTING[V]		11.64 - 12.36	14.55 - 15.45
PROTECTION CIRCUIT	OVERCURRENT PROTECTION		Works over 105% of rating and recovers automatically	

GENERAL SPECIFICATIONS

ISOLATION	INPUT-OUTPUT	DC1,500V or AC1,000V 1minute, Cutoff current=10mA, DC500V 1,000MΩ min (20±15℃)
ENVIRONMENT	OPERATING TEMP.,HUMID.AND ALTITUDE	-40 to +85℃, 20 to 95%RH (Non condensing) (Refer to “Derating”), 5,000m (16,400feet) max
	STORAGE TEMP.,HUMID.AND ALTITUDE	-40 to +100℃, 20 to 95%RH (Non condensing), 9,000m (30,000feet) max
	VIBRATION	10 - 55Hz 98.0m/s² (10G), 3minute period, 60minutes each along X, Y and Z axis
	IMPACT	490.3m/s² (50G) 11ms, once each along X, Y and Z axis
SAFETY	AGENCY APPROVALS	UL60950-1, C-UL, EN62368-1
OTHERS	CASE SIZE/WEIGHT	17.0×12.0×8.5mm [0.67×0.48×0.34 inches] (W×H×D) / 4g max
	COOLING METHOD	Convection/Forced air

∗1 Single output +24V, +30V with no use of COM.
∗2 Rated input 24V DC Io=100%
∗3 Symmetrical loading from 20% to 100%.
∗4 Symmetrical loading from 0% to 100%.
∗5 Ripple and Ripple Noise is measured by using test board with ceramic capacitor 1μF at 50mm from output pins. (20MHz Osilloscope)
∗6 Drift is the DC output accuracy for eight hours period after a half-hour warm-up at 25℃.
∗ Parallel operation with other model is not possible.

External view

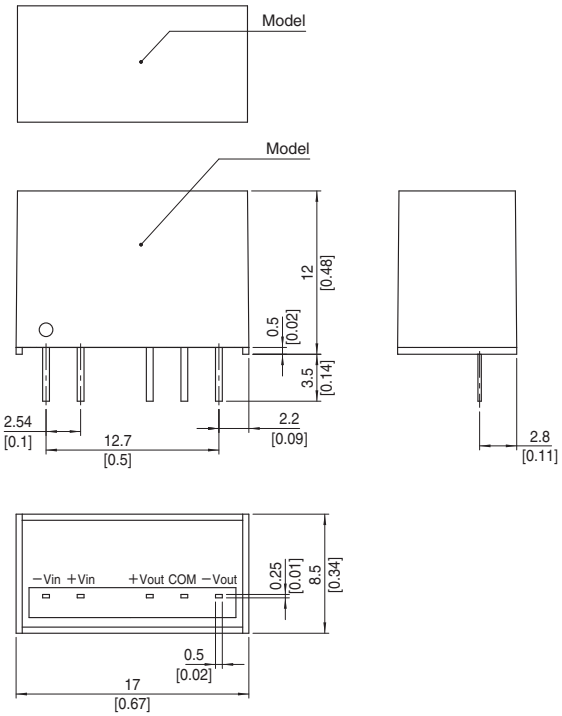

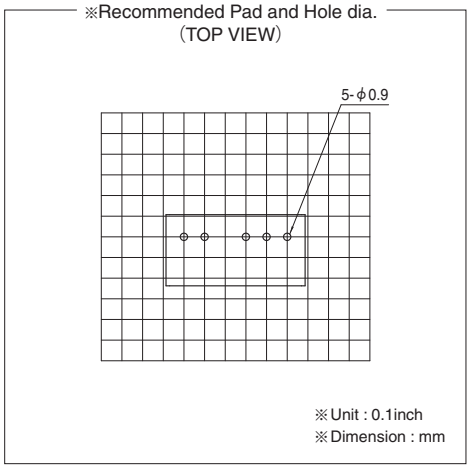

※ Tolerance ±0.5 [±0.02]
※ Dimensions in mm, [ ]= inches
※ Pin terminal material : Copper
※ Planting treatment of terminal : Lead free plating
※ Case material : PBT
※ Weight 4g max

COSEL DC-DC Converters PCB Mount Type

MGXS6

Ordering information

MGX	S	6	24	05	-□
①	②	③	④	⑤	⑥

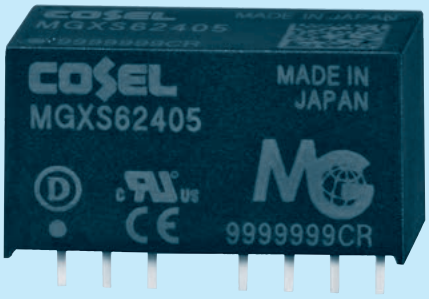

①Series name
②Single output
③Output wattage
④Input voltage
⑤Output voltage
⑥Optional
Y2: Output voltage adjustable (+10%, -5%)

MODEL		MGXS6243R3	MGXS62405	MGXS62412	MGXS62415
MAX OUTPUT WATTAGE[W]		5.28	6.0	6.0	6.0
DC OUTPUT	VOLTAGE[V]	3.3	5	12	15
	CURRENT[A]	1.6	1.2	0.5	0.4

SPECIFICATIONS

	MODEL		MGXS6243R3	MGXS62405	MGXS62412	MGXS62415
INPUT	VOLTAGE[V]		DC6 - 60 (Surge voltage 76V, 100ms max) (Refer to "Derating" for input voltage derating.)			
	CURRENT[A]	*1	0.26typ	0.29typ	0.29typ	0.29typ
	EFFICIENCY[%]	*1	85typ	88typ	87typ	87typ
OUTPUT	VOLTAGE[V]		3.3	5	12	15
	CURRENT[A]		1.6	1.2	0.5	0.4
	LINE REGULATION[mV]		20max	20max	48max	60max
	LOAD REGULATION[mV]		20max	20max	48max	60max
	RIPPLE[mVp-p]	Io=30% -	75max	75max	100max	100max
		Io=0 - 30%	225max	225max	300max	300max
		Vin=DC48 - 60V	225max	225max	300max	300max
	RIPPLE NOISE[mVp-p]	Io=30% -	120max	120max	150max	150max
		Io=0 - 30%	300max	300max	400max	400max
		Vin=DC48 - 60V	300max	300max	400max	400max
	TEMPERATURE REGULATION[mV]	-20 to +75℃	50max	50max	150max	180max
		-40 to +75℃	80max	80max	240max	290max
	DRIFT[mV]	*3	20max	20max	48max	60max
	START-UP TIME[ms]		30max			
	OUTPUT VOLTAGE SETTING[V]		3.21 - 3.42	4.90 - 5.21	11.64 - 12.36	14.55 - 15.45
PROTECTION CIRCUIT AND OTHERS	OVERCURRENT PROTECTION		Works over 105% of rating and recovers automatically			
	REMOTE ON/OFF		Provided (Negative logic L : ON, H : OFF)			

GENERAL SPECIFICATIONS

ISOLATION	INPUT-OUTPUT	DC1,500V or AC1,000V 1minute, Cutoff current=10mA, DC500V 1,000MΩ min (20±15℃)
ENVIRONMENT	OPERATING TEMP.,HUMID.AND ALTITUDE	-40 to +85℃, 20 to 95%RH (Non condensing) (Refer to "Derating"), 5,000m (16,400feet) max
	STORAGE TEMP.,HUMID.AND ALTITUDE	-40 to +100℃, 20 to 95%RH (Non condensing), 9,000m (30,000feet) max
	VIBRATION	10 - 55Hz 98.0m/s² (10G), 3minute period, 60minutes each along X, Y and Z axis
	IMPACT	490.3m/s² (50G) 11ms, once each along X, Y and Z axis
SAFETY	AGENCY APPROVALS	UL60950-1, C-UL, EN62368-1
OTHERS	CASE SIZE/WEIGHT	22.0×12.0×9.5mm [0.87×0.48×0.38 inches] (W×H×D) / 7g max
	COOLING METHOD	Convection/Forced air

*1 Rated input 24V DC Io=100%
*2 Ripple and ripple noise is measured by using test board with ceramic capacitor 1μF at 50mm from output pins.
*3 Drift is the DC output accuracy for eight hours period after a half-hour warm-up at 25℃.
* Parallel operation with other model is not possible.
* MGXW62412/MGXW62415 is available as single output, +24V/+30V

External view

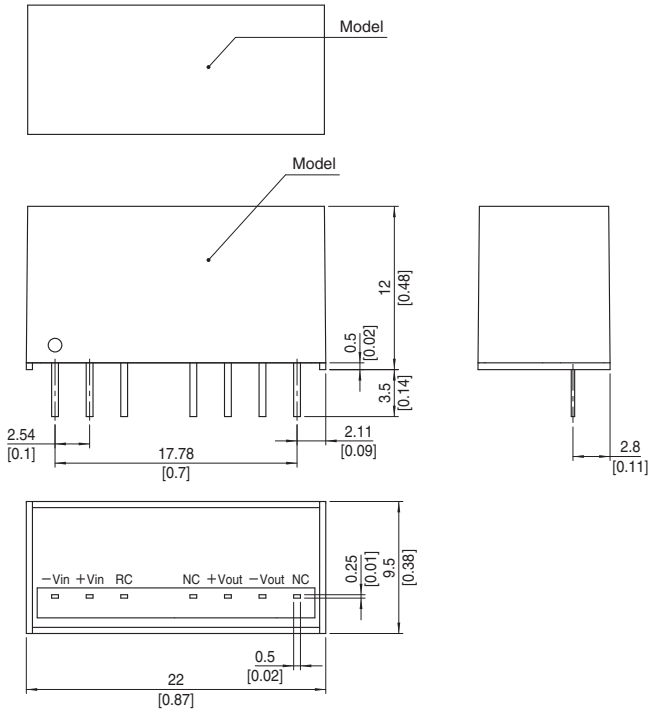

<Pin Configuration (Option : Y2)>

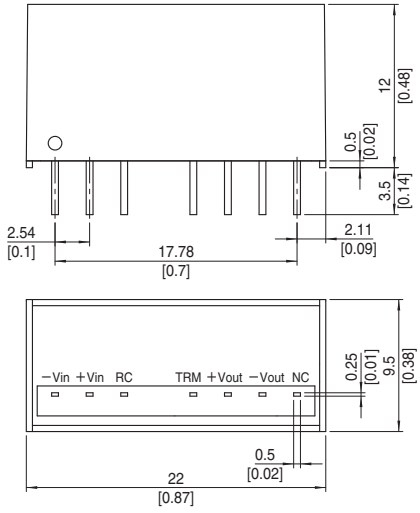

※Recommended Pad and Hole dia.
(TOP VIEW)

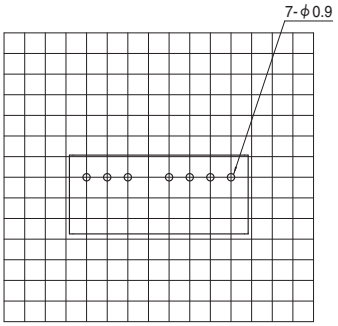

※Unit : 0.1inch
※Dimension : mm

※ Tolerance ±0.5 [±0.02]
※ Dimensions in mm, [ ]= inches
※ Pin terminal material : Copper
※ Planting treatment of terminal : Lead free plating
※ Case material : PBT
※ Weight 7g max

COSEL DC-DC Converters PCB Mount Type

MGXW6

Ordering information

MGX	W	6	24	12	-□
①	②	③	④	⑤	⑧

①Series name
②Dual output
③Output wattage
④Input voltage
⑤Output voltage
⑥Optional
Y2: Output voltage adjustable (+10%, -5%)

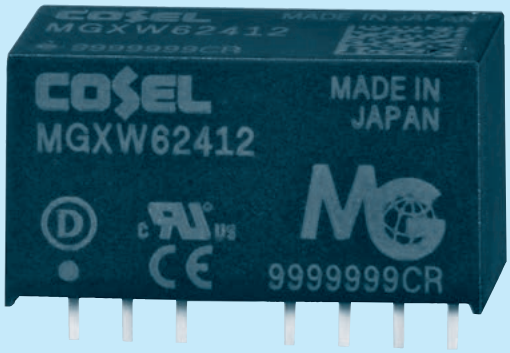

MODEL		MGXW62412	MGXW62415
MAX OUTPUT WATTAGE[W]		6.00	6.00
DC OUTPUT	VOLTAGE[V] *1	±12 or +24	±15 or +30
	CURRENT[A]	0.25	0.2

SPECIFICATIONS

	MODEL		MGXW62412	MGXW62415
INPUT	VOLTAGE[V]		DC6 - 60 (Surge voltage 76V, 100ms max) (Refer to "Derating" for input voltage derating.)	
	CURRENT[A] *2		0.29typ	0.29typ
	EFFICIENCY[%] *2		87typ	87typ
OUTPUT	VOLTAGE[V]		±12 (+24)	±15 (+30)
	CURRENT[A]		0.25	0.2
	LINE REGULATION[mV]		60max	75max
	LOAD REGULATION[mV]	*3	480max	600max
		*4	600max	750max
	RIPPLE[mVp-p] *5	Po=30% -	120max	120max
		Po=0 - 30%	480max	480max
		Vin=DC48 - 60V	480max	480max
	RIPPLE NOISE[mVp-p] *5	Po=30% -	200max	200max
		Po=0 - 30%	600max	600max
		Vin=DC48 - 60V	600max	600max
	TEMPERATURE REGULATION[mV]	-20 to +75℃	190max	230max
		-40 to +75℃	300max	360max
	DRIFT[mV] *6		48max	60max
	START-UP TIME[ms]		30max	
	OUTPUT VOLTAGE SETTING[V]		11.64 - 12.36	14.55 - 15.45
PROTECTION CIRCUIT AND OTHERS	OVERCURRENT PROTECTION		Works over 105% of rating and recovers automatically	
	REMOTE ON/OFF		Provided (Negative logic L : ON, H : OFF)	

GENERAL SPECIFICATIONS

ISOLATION	INPUT-OUTPUT	DC1,500V or AC1,000V 1minute, Cutoff current=10mA, DC500V 1,000MΩ min (20±15℃)
ENVIRONMENT	OPERATING TEMP.,HUMID.AND ALTITUDE	-40 to +85℃, 20 to 95%RH (Non condensing) (Refer to "Derating"), 5,000m (16,400feet) max
	STORAGE TEMP.,HUMID.AND ALTITUDE	-40 to +100℃, 20 to 95%RH (Non condensing), 9,000m (30,000feet) max
	VIBRATION	10 - 55Hz 98.0m/s² (10G), 3minute period, 60minutes each along X, Y and Z axis
	IMPACT	490.3m/s² (50G) 11ms, once each along X, Y and Z axis
SAFETY	AGENCY APPROVALS	UL60950-1, C-UL, EN62368-1
OTHERS	CASE SIZE/WEIGHT	22.0×12.0×9.5mm [0.87×0.48×0.38 inches] (W×H×D) / 7g max
	COOLING METHOD	Convection/Forced air

*1 Single output +24V, +30V with no use of COM.
*2 Rated input 24V DC Io=100%
*3 Symmetrical loading from 20% to 100%.
*4 Symmetrical loading from 0% to 100%.
*5 Ripple and Ripple Noise is measured by using test board with ceramic capacitor 1μF at 50mm from output pins. (20MHz Osilloscope). Po:Output wattage.
*6 Drift is the DC output accuracy for eight hours period after a half-hour warm-up at 25℃.
* Parallel operation with other model is not possible.

External view

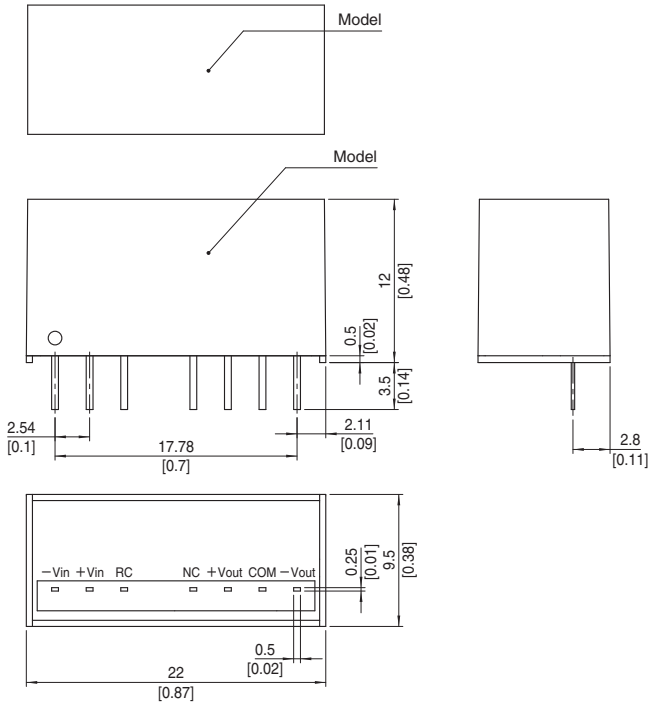

※Recommended Pad and Hole dia.
(TOP VIEW)

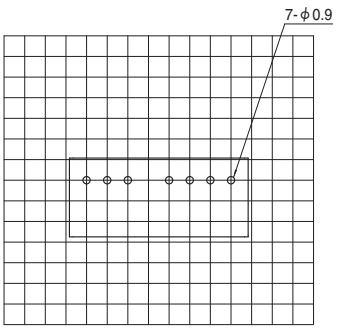

※Unit : 0.1inch
※Dimension : mm

※ Tolerance ±0.5 [±0.02]
※ Dimensions in mm, [ ]= inches
※ Pin terminal material : Copper
※ Planting treatment of terminal : Lead free plating
※ Case material : PBT
※ Weight 7g max

<Pin Configuration (Option : Y2)>

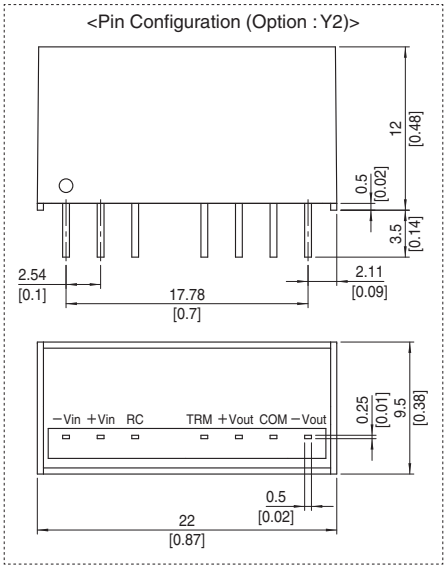

Pin configuration

●MG1R5/MG3 Single Output

<Bottom View>

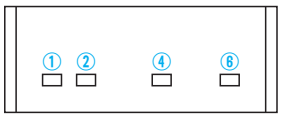

(a) Standard

<Bottom View>

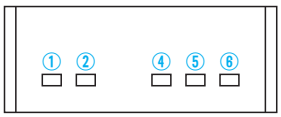

(b) Option : Y2

Pin No.	Pin Name	Function
①	-Vin	-DC Input
②	+Vin	+DC Input
④	+Vout	+DC Output
⑤	NP	No Pin
	TRM	Output Voltage Adjustment (Option:Refer to instruction manual 1.5)
⑥	-Vout	-DC Output

●MG1R5/MG3 Dual Output

<Bottom View>

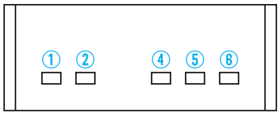

Pin No.	Pin Name	Function
①	-Vin	-DC Input
②	+Vin	+DC Input
④	+Vout	+DC Output
⑤	COM	GND of Output Voltage
⑥	-Vout	-DC Output

●MG6/MG10 Single Output, Dual Output

<Bottom View>

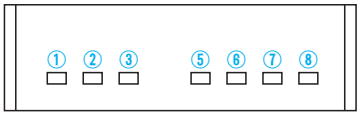

(a) Single Output, Dual Output

Pin No.	Pin Name	Function
①	-Vin	-DC Input
②	+Vin	+DC Input
③	RC	Remote ON/OFF
⑤	NC	No Connect
	TRM	Output Voltage Adjustment (Option:Refer to instruction manual 1.5)
⑥	+Vout	+DC Output
⑦	-Vout	-DC Output (for Single Output)
	COM	GND of Output Voltage (for Dual Output)
⑧	NC	No Connect (for Single Output)
	-Vout	-DC Output (for Dual Output)

Assembling and Installation Method

Installation

■When two or more power supplies are used side by side, position them with proper intervals to allow enough air ventilation. Ambient temperature around each power supply should not exceed the temperature range shown in “Derating”.

Soldering Conditions

(1) Flow Soldering : 260℃ 15 seconds or less
(2) Soldering Iron : maximum 360℃ 5 seconds or less

Stress to Pin

■Applying excessive stress to the input or output pins of the power module may damage internal connections. Avoid applying stress in excess of that shown in right figure.
■Input/output pin are soldered to the PCB internally.
Do not pull or bend a lead powerfully.

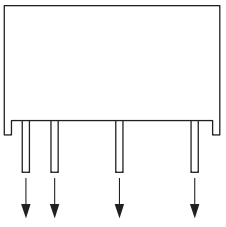

■If it is expected that stress is applied to the input/output pin due to vibration or impact, reduce the stress to the pin by taking such measures as fixing the unit to the PCB by silicone rubber, etc.
■Due to prevent failure, PS should not be pulled after soldering with PCB.

Derating

Derating curve for input voltage

●MGF3/MGFS10

■MGFS3, MGFW3, MGFS10 and MGFW10 has derating by input voltage is required. shown below.

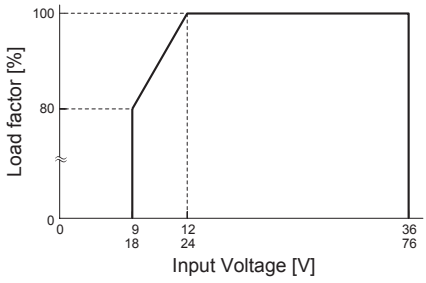

●MGX1R5/MGX6

■MGXS1R5, MGXW1R5, MGXS6 and MGXW6 has derating by input voltage is required. shown below.

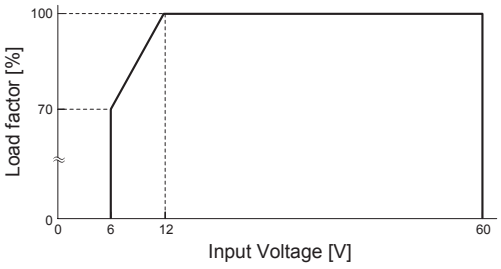

Ambient temperature derating curve

■It is necessary to note thermal fatigue life by power cycle. Please reduce the temperature fluctuation range as much as possible when the up and down of temperature are frequently generated.

■In case of forced air, ventilation must keep the temperature of point below the temperatures shown in Instruction Manual 7.

●MGS1R5/MGW1R5 (Rated Input Voltage)

(1) In the case of Convection Cooling (Reference)

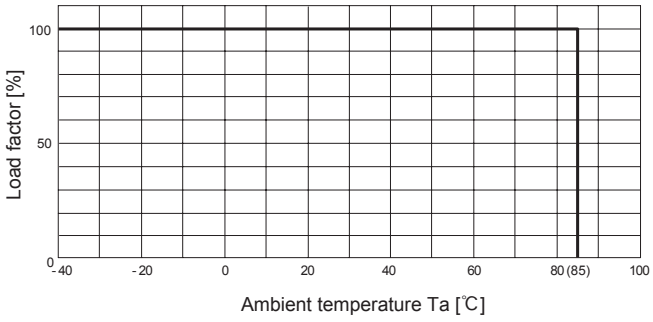

(2) In the case of Forced Air Cooling (1.0m/s) (Reference)

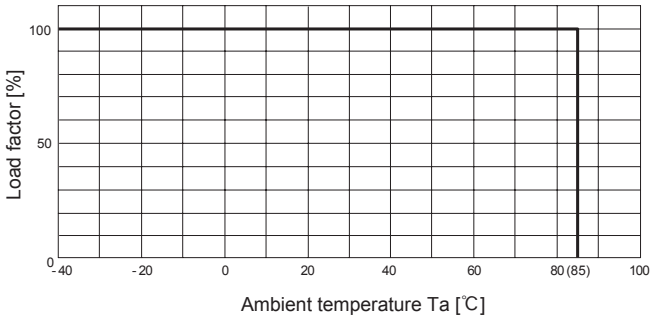

●MGS3/MGW3 (Rated Input Voltage)

(1) In the case of Convection Cooling (Reference)

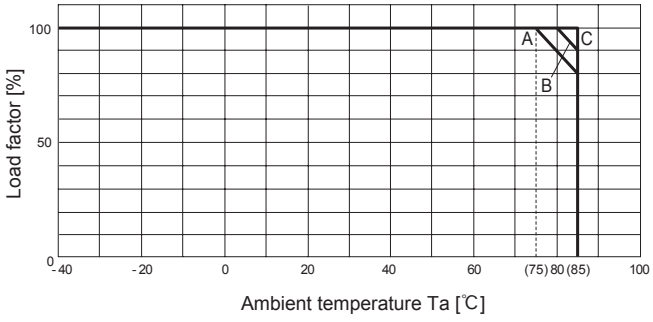

(2) In the case of Forced Air Cooling (1.0m/s) (Reference)

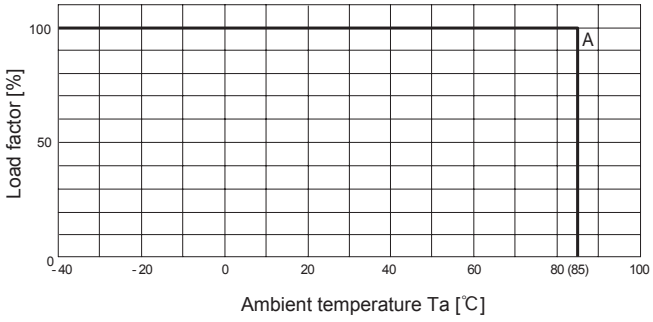

Output Voltage / Input Voltage	3.3	5	12	15	±12	±15
5	B	B	C	C	B	B
12	B	C	C	C	B	C
24	B	C	C	C	B	C
48	A	A	C	C	B	C

Output Voltage / Input Voltage	3.3	5	12	15	±12	±15
5	A	A	A	A	A	A
12	A	A	A	A	A	A
24	A	A	A	A	A	A
48	A	A	A	A	A	A

Derating

●MGS6/MGW6 (Rated Input Voltage)

■In the hatched area, the specification of Ripple, Ripple Noise is different from other area.

(1) In the case of Convection Cooling (Reference)

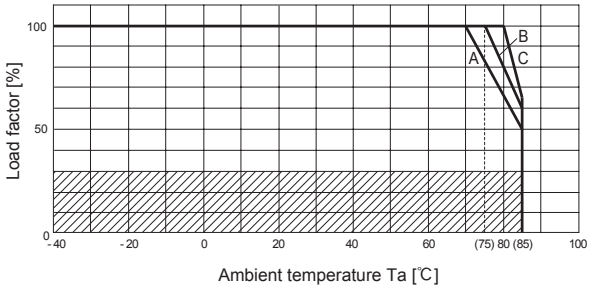

Output Voltage / Input Voltage	3.3	5	12	15	±12	±15
5	A	B	B	C	C	C
12	A	B	C	C	C	C
24	A	B	C	C	C	C
48	A	A	C	C	C	C

(2) In the case of Forced Air Cooling (1.0m/s) (Reference)

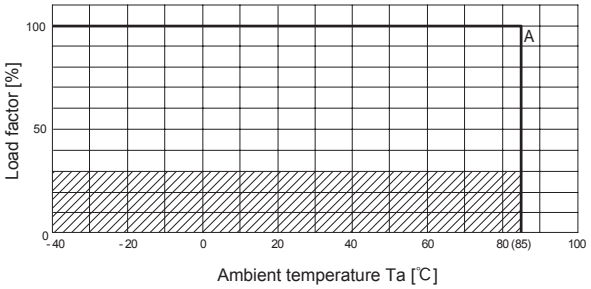

Output Voltage / Input Voltage	3.3	5	12	15	±12	±15
5	A	A	A	A	A	A
12	A	A	A	A	A	A
24	A	A	A	A	A	A
48	A	A	A	A	A	A

●MGS10/MGW10 (Rated Input Voltage)

■In the hatched area, the specification of Ripple, Ripple Noise is different from other area.

(1) In the case of Convection Cooling (Reference)

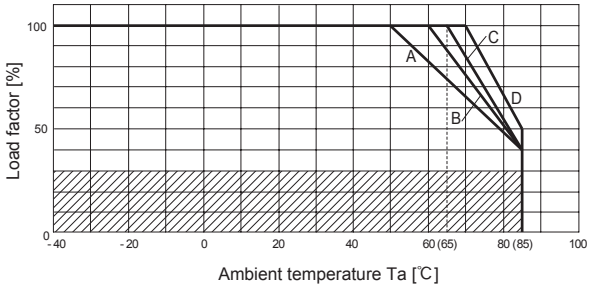

Output Voltage / Input Voltage	3.3	5	12	15	±12	±15
5	A	A	A	A	A	A
12	C	C	C	D	B	B
24	B	C	C	D	B	C
48	B	C	C	D	B	C

(2) In the case of Forced Air Cooling (1.0m/s) (Reference)

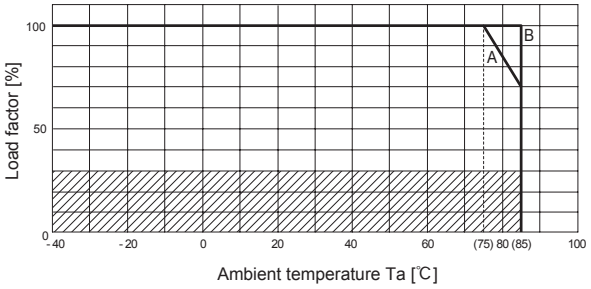

Output Voltage / Input Voltage	3.3	5	12	15	±12	±15
5	A	A	A	A	A	A
12	B	B	B	B	B	B
24	B	B	B	B	B	B
48	B	B	B	B	B	B

●MGFS1R5/MGFW1R5 (Rated Input Voltage)

(1) In the case of Convection Cooling (Reference)

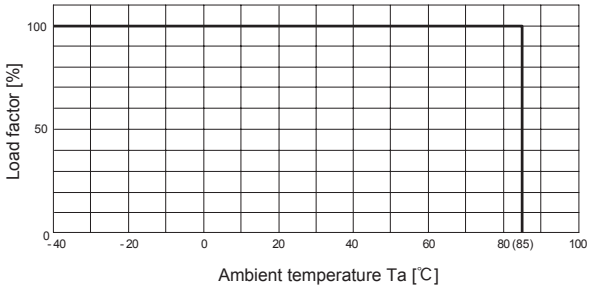

(2) In the case of Forced Air Cooling (1.0m/s) (Reference)

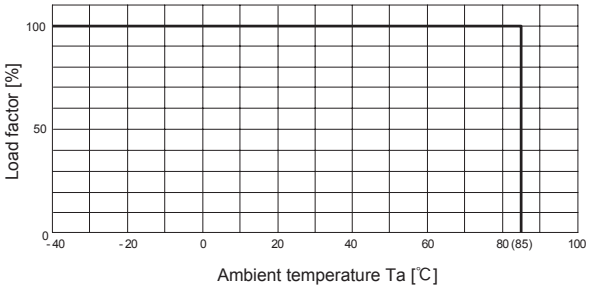

Derating

●MGFS3/MGFW3 (Rated Input Voltage)

(1) In the case of Convection Cooling (Reference)

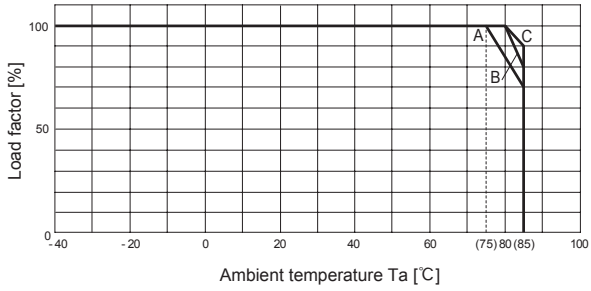

Output Voltage / Input Voltage	3.3	5	12	15	±12	±15
12-24	A	A	C	C	C	C
24-48	A	A	B	B	B	B

(2) In the case of Forced Air Cooling (1.0m/s) (Reference)

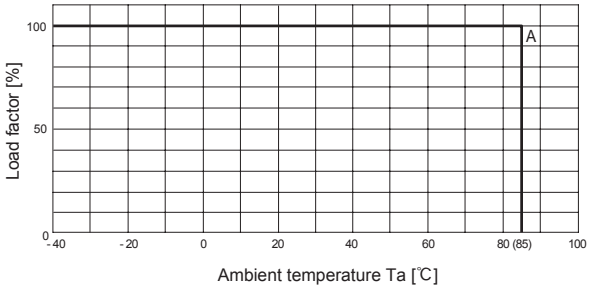

Output Voltage / Input Voltage	3.3	5	12	15	±12	±15
12-24	A	A	A	A	A	A
24-48	A	A	A	A	A	A

●MGFS6/MGFW6 (Rated Input Voltage)

■In the hatched area, the specification of Ripple, Ripple Noise is different from other area.

(1) In the case of Convection Cooling (Reference)

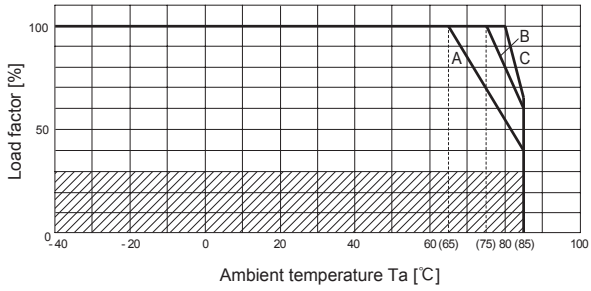

Output Voltage / Input Voltage	3.3	5	12	15	±12	±15
12-24	A	A	C	C	C	C
24-48	A	A	C	C	B	B

(2) In the case of Forced Air Cooling (1.0m/s) (Reference)

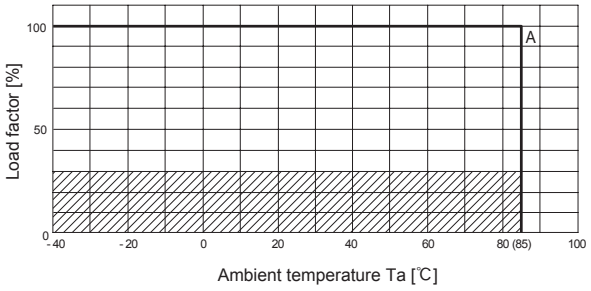

Output Voltage / Input Voltage	3.3	5	12	15	±12	±15
12-24	A	A	A	A	A	A
24-48	A	A	A	A	A	A

●MGFS10/MGFW10 (Rated Input Voltage)

■In the hatched area, the specification of Ripple, Ripple Noise is different from other area.

(1) In the case of Convection Cooling (Reference)

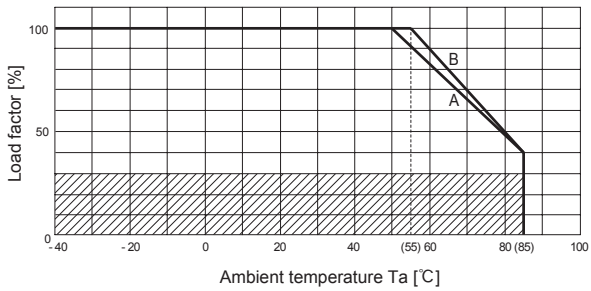

Output Voltage / Input Voltage	3.3	5	12	15	±12	±15
12-24	B	B	B	B	A	A
24-48	B	B	B	B	B	B

(2) In the case of Forced Air Cooling (1.0m/s) (Reference)

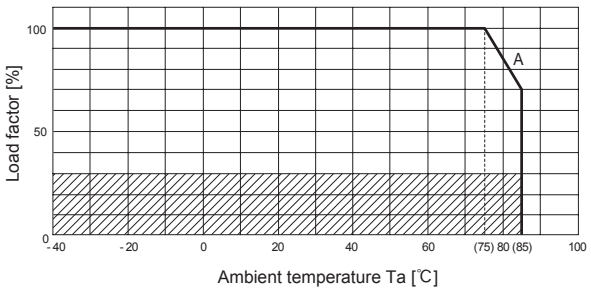

Output Voltage / Input Voltage	3.3	5	12	15	±12	±15
12-24	A	A	A	A	A	A
24-48	A	A	A	A	A	A

Derating

●MGXS1R5/MGXW1R5 (Rated Input Voltage)

(1) In the case of Convection Cooling (Reference)

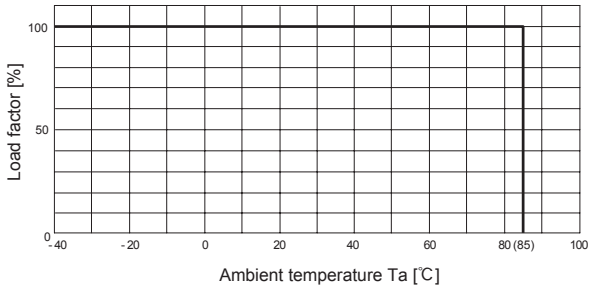

(2) In the case of Forced Air Cooling (1.0m/s) (Reference)

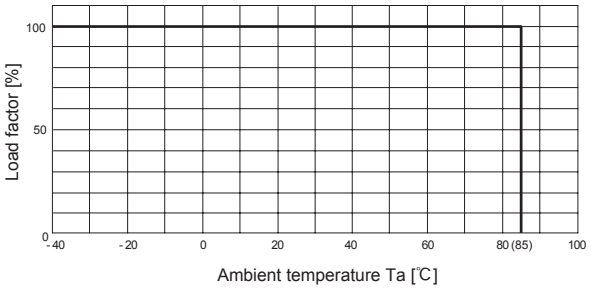

●MGXS6/MGFXW6 (Rated Input Voltage)

■In the hatched area, the specification of Ripple, Ripple Noise is different from other area.

(1) In the case of Convection Cooling (Reference)

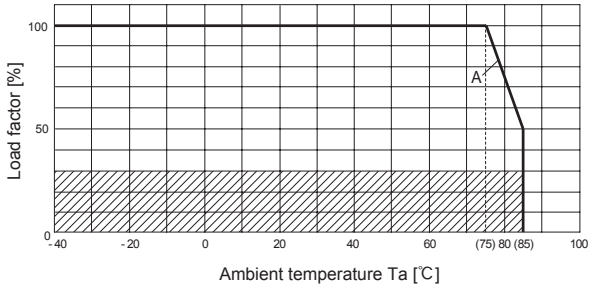

(2) In the case of Forced Air Cooling (1.0m/s) (Reference)

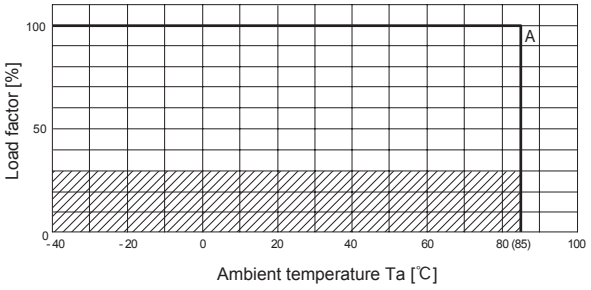

Output Voltage / Input Voltage	3.3	5	12	15	±12	±15
12-48	A	A	A	A	A	A

Output Voltage / Input Voltage	3.3	5	12	15	±12	±15
12-48	A	A	A	A	A	A

Instruction Manual

◆ It is neccessary to read the “Instruction Manual” and “Before using our product” before you use our product.

Instruction Manual	https://www.cosel.co.jp/redirect/catalog/en/MGS/
Instruction Manual	https://www.cosel.co.jp/redirect/catalog/en/MGW/
Instruction Manual	https://www.cosel.co.jp/redirect/catalog/en/MGFS/
Instruction Manual	https://www.cosel.co.jp/redirect/catalog/en/MGFW/
Instruction Manual	https://www.cosel.co.jp/redirect/catalog/en/MGXS/
Instruction Manual	https://www.cosel.co.jp/redirect/catalog/en/MGXW/
Before using our product	https://en.cosel.co.jp/technical/caution/index.html

MGS MGFS MGXS

MGW MGFW MGXW NOTICE

Basic Characteristics Data

Model	Circuit method	Switching frequency [kHz] (reference)	Input current [A]	Inrush current protection	PCB/Pattern			Series/Parallel operation availability	
					Material	Single sided	Double sided	Series operation	Parallel operation
MG1R5	Flyback converter	200-1500 ＊3	＊1	-	glass fabric base,epoxy resin		Yes	Yes	＊2
MGF1R5	Flyback converter	120-1500 ＊3	＊1	-	glass fabric base,epoxy resin		Yes	Yes	＊2
MGX1R5	Flyback converter	60-1000 ＊3	＊1	-	glass fabric base,epoxy resin		Yes	Yes	＊2
MG3	Flyback converter	200-1500 ＊3	＊1	-	glass fabric base,epoxy resin		Yes	Yes	＊2
MGF3	Flyback converter	120-1500 ＊3	＊1	-	glass fabric base,epoxy resin		Yes	Yes	＊2
MG6	Flyback converter	160-1500 ＊3	＊1	-	glass fabric base,epoxy resin		Yes	Yes	＊2
MGF6	Flyback converter	120-1500 ＊3	＊1	-	glass fabric base,epoxy resin		Yes	Yes	＊2
MGX6	Flyback converter	100-1000 ＊3	＊1	-	glass fabric base,epoxy resin		Yes	Yes	＊2
MG10	Flyback converter	160-1500 ＊3	＊1	-	glass fabric base,epoxy resin		Yes	Yes	＊2
MGF10	Flyback converter	120-1500 ＊3	＊1	-	glass fabric base,epoxy resin		Yes	Yes	＊2

＊1 Refer to Specification.
＊2 Refer to Instruction Manual.
＊3 The value changes depending on input and load.