Low Profile | Isolated | Safety Approvals | OCP | OVP | Remote ON/OFF | Wide 4 :1 input | Ultra wide 10 : 1 input

MG-series

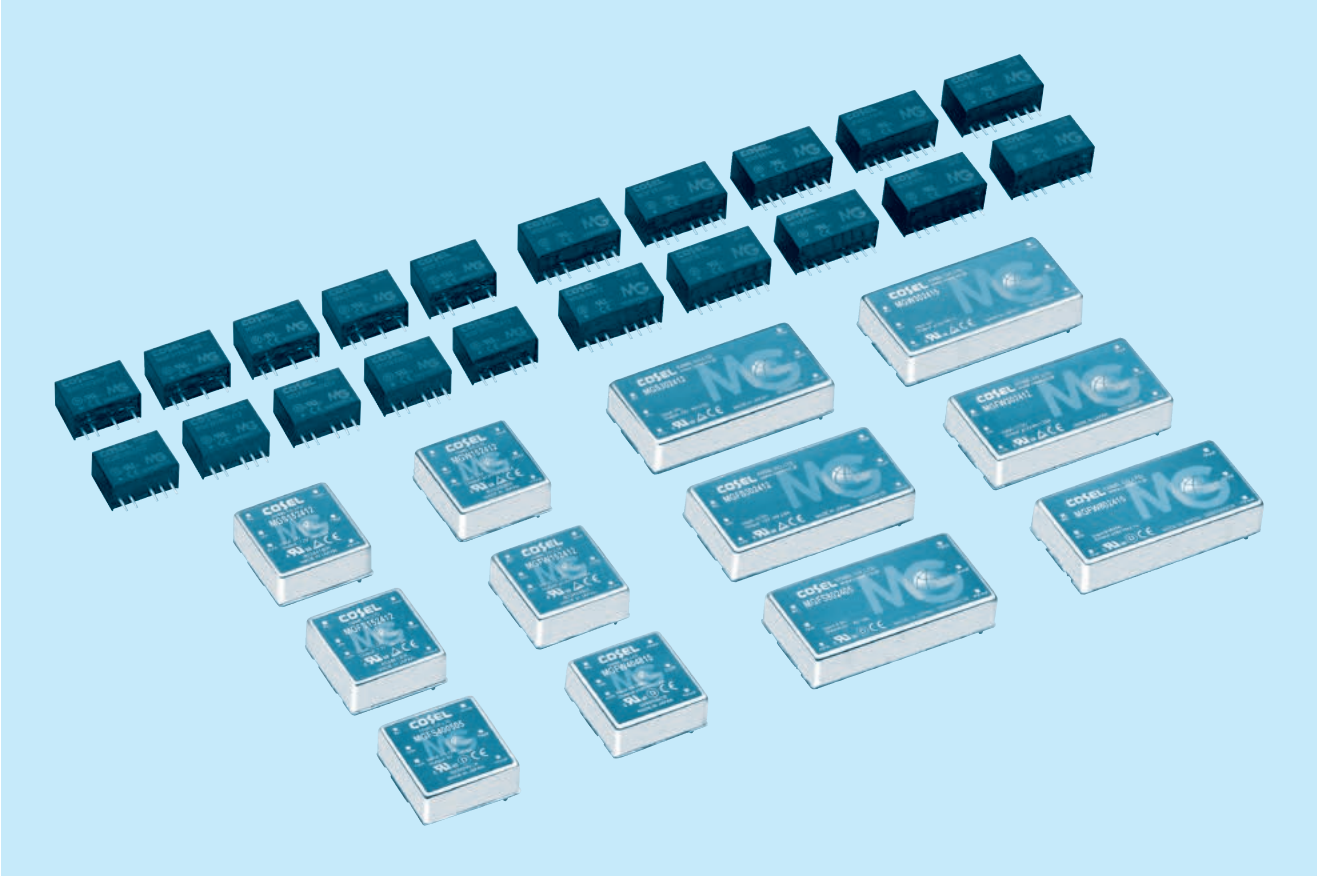

Feature

Industry Standard SIP6 (MG1R5/MG3), SIP8 (MG6/MG10), 1"×1" (MG15/MG40), 1"×2" (MG30/MG80)
Wide input range DC4.5-13V/DC9-36V/DC18-76V (MGFS/MGFW)
Ultra wide input range DC6-60V (MGXS/MGXW)
High efficiency by synchronized rectification circuit (MGS10/MGFS10/MGS15/MGFS15/MGS30/MGFS30/MGFS40/MGFW40/MGFS80/MGFW80)
6 sided shield (MG15/MG30/MG40/MG80)
I/O isolation voltage DC1,500V (1 minute)
Built-in overcurrent protection circuits (recovers automatically)
Built-in overvoltage protection circuits (MG30/MG40/MG80)
Built-in remote ON/OFF (MG6/MG10/MG15/MG30/MG40/MG80)
Output voltage adjustability by external variable resistor (MGS15/MGFS15/MGS30/MGFS30/MGFS40/MGFS80)
High reliability : not built-in aluminum and tantalum electrolytic capacitor

CE marking

Low Voltage Directive
RoHS Directive

UKCA marking

Electrical Equipment Safety Regulations
RoHS Regulations

Safety agency approvals

UL60950-1, C-UL, EN62368-1 (MG1R5/MG3/MG6/MG10/MG15/MG30)
UL62368-1, C-UL, EN62368-1 (MG40/MG80)

10-year warranty

Refer to the instruction manual

COSEL DC-DC Converters PCB Mount Type

MGS15

Ordering information

MG	S	15	24	05	-□
①	②	③	④	⑤	⑥

①Series name
②Single output
③Output wattage
④Input voltage
⑤Output voltage
⑥Optional
G: Capacitor between Input and Output is removed.
R: with Remote ON/OFF (Positive logic control)



MODEL		MGS15123R3	MGS151205	MGS151212	MGS151215	MGS15243R3	MGS152405	MGS152412	MGS152415
MAX OUTPUT WATTAGE[W]		13.2	15	15.6	15	13.2	15	15.6	15
DC OUTPUT	VOLTAGE[V] *1	3.3	5	12	15	3.3	5	12	15
	CURRENT[A]	4	3	1.3	1	4	3	1.3	1

SPECIFICATIONS

	MODEL		MGS15123R3	MGS151205	MGS151212	MGS151215	MGS15243R3	MGS152405	MGS152412	MGS152415
INPUT	VOLTAGE[V]		DC9 - 18				DC18 - 36			
	CURRENT[A]	*2	1.28typ	1.44typ	1.49typ	1.42typ	0.63typ	0.70typ	0.73typ	0.70typ
	EFFICIENCY[%]	*2	86typ	87typ	87typ	88typ	87typ	89typ	89typ	89typ
OUTPUT	VOLTAGE[V]		3.3	5	12	15	3.3	5	12	15
	CURRENT[A]		4	3	1.3	1	4	3	1.3	1
	LINE REGULATION[mV]		13.2max	20max	48max	60max	13.2max	20max	48max	60max
	LOAD REGULATION[mV]		13.2max	20max	48max	60max	13.2max	20max	48max	60max
	RIPPLE[mVp-p] *3	-20 to +60℃	75max	75max	100max	100max	75max	75max	100max	100max
		-40 to -20℃	100max	100max	120max	120max	100max	100max	120max	120max
	RIPPLE NOISE[mVp-p] *3	-20 to +60℃	75max	75max	100max	100max	75max	75max	100max	100max
		-40 to -20℃	150max	150max	150max	150max	150max	150max	150max	150max
	TEMPERATURE REGULATION[mV]	-20 to +60℃	50max	50max	150max	180max	50max	50max	150max	180max
		-40 to +60℃	80max	80max	240max	290max	80max	80max	240max	290max
	DRIFT[mV]	*4	20max	20max	48max	60max	20max	20max	48max	60max
	START-UP TIME[ms]		30max (Minimum input, Io=100%)							
	OUTPUT VOLTAGE ADJUSTMENT RANGE		Fixed (TRM pin open) Available to adjust ±10% by external variable resister							
	OUTPUT VOLTAGE SETTING[V] *5		3.296 - 3.404	4.975 - 5.137	11.857 - 12.243	14.839 - 15.321	3.296 - 3.404	4.975 - 5.137	11.857 - 12.243	14.839 - 15.321
PROTECTION CIRCUIT AND OTHERS	OVERCURRENT PROTECTION		Works over 105% of rating and recovers automatically							
	REMOTE ON/OFF		Provided (Negative logic L:ON, H:OFF)							

MODEL		MGS15483R3	MGS154805	MGS154812	MGS154815
MAX OUTPUT WATTAGE[W]		13.2	15	15.6	15
DC OUTPUT	VOLTAGE[V] *1	3.3	5	12	15
	CURRENT[A]	4	3	1.3	1

SPECIFICATIONS

	MODEL		MGS15483R3	MGS154805	MGS154812	MGS154815
INPUT	VOLTAGE[V]		DC36 - 76			
	CURRENT[A]	*2	0.32typ	0.35typ	0.36typ	0.35typ
	EFFICIENCY[%]	*2	87typ	89typ	90typ	90typ
OUTPUT	VOLTAGE[V]		3.3	5	12	15
	CURRENT[A]		4	3	1.3	1
	LINE REGULATION[mV]		13.2max	20max	48max	60max
	LOAD REGULATION[mV]		13.2max	20max	48max	60max
	RIPPLE[mVp-p] *3	-20 to +60℃	75max	75max	100max	100max
		-40 to -20℃	100max	100max	120max	120max
	RIPPLE NOISE[mVp-p] *3	-20 to +60℃	75max	75max	100max	100max
		-40 to -20℃	150max	150max	150max	150max
	TEMPERATURE REGULATION[mV]	-20 to +60℃	50max	50max	150max	180max
		-40 to +60℃	80max	80max	240max	290max
	DRIFT[mV]	*4	20max	20max	48max	60max
	START-UP TIME[ms]		30max (Minimum input, Io=100%)			
	OUTPUT VOLTAGE ADJUSTMENT RANGE		Fixed (TRM pin open) ±10% adjustable by external VR			
	OUTPUT VOLTAGE SETTING[V] *5		3.296 - 3.404	4.975 - 5.137	11.857 - 12.243	14.839 - 15.321
PROTECTION CIRCUIT AND OTHERS	OVERCURRENT PROTECTION		Works over 105% of rating and recovers automatically			
	REMOTE ON/OFF		Provided (Negative logic L:ON, H:OFF)			

GENERAL SPECIFICATIONS

ISOLATION	INPUT-OUTPUT	DC1,500V 1minute, Cutoff current = 10mA, DC500V 1,000MΩ min (20±15℃)
	INPUT-CASE	DC1,000V 1minute, Cutoff current = 10mA, DC500V 1,000MΩ min (20±15℃)
	OUTPUT-CASE	DC1,000V 1minute, Cutoff current = 10mA, DC500V 1,000MΩ min (20±15℃)
ENVIRONMENT	OPERATING TEMP.,HUMID.AND ALTITUDE	-40 to +85℃, 20 to 95%RH (Non condensing) (Refer to "Derating"), 3,000m (10,000feet) max
	STORAGE TEMP.,HUMID.AND ALTITUDE	-40 to +100℃, 20 to 95%RH (Non condensing), 9,000m (30,000feet) max
	VIBRATION	10 - 55Hz, 98.0m/s² (10G), 3minutes period, 60minutes each along X, Y and Z axis
	IMPACT	490.3m/s² (50G), 11ms, once each along X, Y and Z axis
SAFETY	AGENCY APPROVALS	UL60950-1, C-UL, EN62368-1
OTHERS	CASE SIZE/WEIGHT	25.4×9.9×25.4mm [1×0.39×1 inches] (W×H×D) / 20g max
	COOLING METHOD	Convection/Forced air

*1 MGW15xx05/MGW15xx12/MGW15xx15 is available as single output, +10V/+24V/+30V
*2 Rated input 12V, 24V or 48V DC Io=100%
*3 Ripple and Ripple Noise is measured by using test board with ceramic capacitor 22μF at 50mm from output pins. (20MHz Osilloscope)
*4 Drift is the DC output accuracy for eight hours period after a half-hour warm-up at 25℃.
*5 Rated input voltage (DC12V, DC24V, DC48V), rated output wattage, ambient temperature at 25℃.
* Parallel operation with other model is not possible.

External view

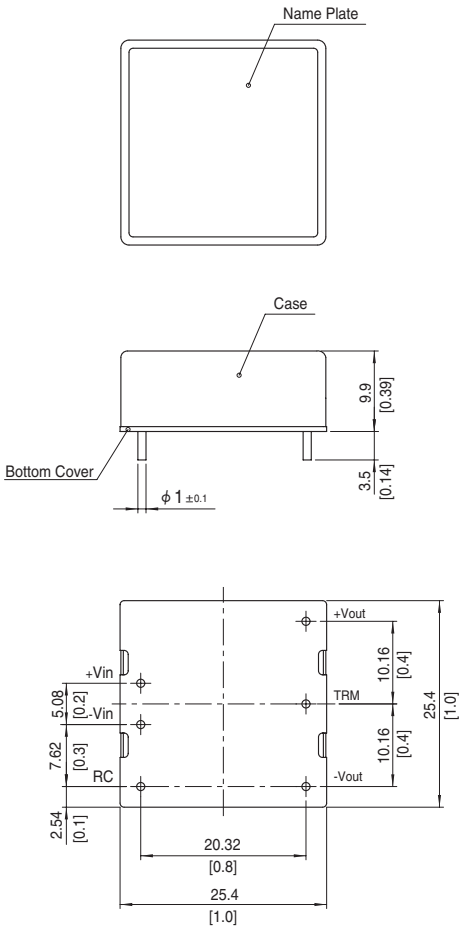

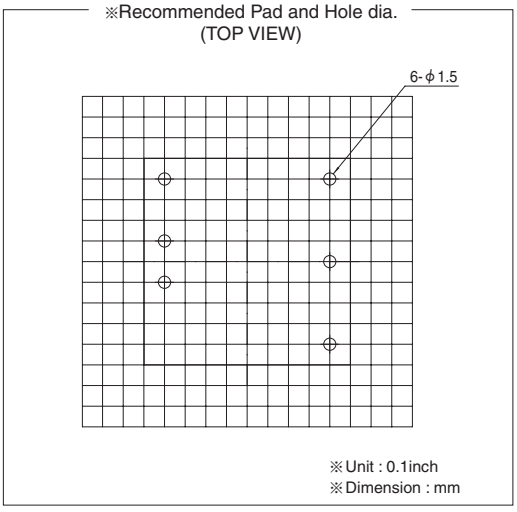

※ Tolerance ±0.5 [±0.02]
※ Dimensions in mm, [ ]=inches
※ Pin terminal material : Copper
※ Plating treatment of terminal : Lead free plating
※ Case material : Brass
※ Plating treatment of case : Nickel plating
※ Bottom Cover : FR4 (t=0.6) [t=0.024]
※ Please keep enough creepage distance with the pattern on PCB and other components.
※ Weight 20g max

COSEL DC-DC Converters PCB Mount Type

MGW15

Ordering information

MG	W	15	24	05	-□
①	②	③	④	⑤	⑥

①Series name
②Dual output
③Output wattage
④Input voltage
⑤Output voltage
⑥Optional
G: Capacitor between Input and Output is removed.
R: with Remote ON/OFF (Positive logic control)



MODEL		MGW151205	MGW151212	MGW151215	MGW152405	MGW152412	MGW152415	MGW154805	MGW154812	MGW154815
MAX OUTPUT WATTAGE[W]		15	15.6	15	15	15.6	15	15	15.6	15
DC OUTPUT	VOLTAGE[V] *1	±5 or +10	±12 or +24	±15 or +30	±5 or +10	±12 or +24	±15 or +30	±5 or +10	±12 or +24	±15 or +30
	CURRENT[A]	1.5	0.65	0.5	1.5	0.65	0.5	1.5	0.65	0.5

SPECIFICATIONS

	MODEL		MGW151205	MGW151212	MGW151215	MGW152405	MGW152412	MGW152415	MGW154805	MGW154812	MGW154815
INPUT	VOLTAGE[V]		DC9 - 18			DC18 - 36			DC36 - 76		
	CURRENT[A]	*2	1.48typ	1.49typ	1.42typ	0.74typ	0.74typ	0.70typ	0.37typ	0.37typ	0.35typ
	EFFICIENCY[%]	*2	84typ	87typ	88typ	84typ	88typ	89typ	84typ	89typ	89typ
OUTPUT	VOLTAGE[V]		±5(+10)	±12(+24)	±15(+30)	±5(+10)	±12(+24)	±15(+30)	±5(+10)	±12(+24)	±15(+30)
	CURRENT[A]		1.5	0.65	0.5	1.5	0.65	0.5	1.5	0.65	0.5
	LINE REGULATION[mV]		40max	60max	75max	40max	60max	75max	40max	60max	75max
	LOAD REGULATION[mV]	*3	500max *5	600max	750max	500max *5	600max	750max	500max *5	600max	750max
		*4	250max	480max	600max	250max	480max	600max	250max	480max	600max
	RIPPLE[mVp-p] *6	-20 to +60℃	100max	100max	100max	100max	100max	100max	100max	100max	100max
		-40 to -20℃	120max	120max	120max	120max	120max	120max	120max	120max	120max
	RIPPLE NOISE[mVp-p] *6	-20 to +60℃	100max	100max	100max	100max	100max	100max	100max	100max	100max
		-40 to -20℃	150max	150max	150max	150max	150max	150max	150max	150max	150max
	TEMPERATURE REGULATION[mV]	-20 to +60℃	50max	150max	180max	50max	150max	180max	50max	150max	180max
		-40 to +60℃	80max	240max	290max	80max	240max	290max	80max	240max	290max
	DRIFT[mV]	*7	50max	50max	60max	50max	50max	60max	50max	50max	60max
	START-UP TIME[ms]		30max (Minimum input, Io=100%)								
	OUTPUT VOLTAGE SETTING[V]	*8	4.935 - 5.240	11.765 - 12.492	14.602 - 15.505	4.935 - 5.240	11.765 - 12.492	14.602 - 15.505	4.935 - 5.240	11.765 - 12.492	14.602 - 15.505
PROTECTION CIRCUIT AND OTHERS	OVERCURRENT PROTECTION		Works over 105% of rating and recovers automatically								
	REMOTE ON/OFF		Provided (Negative logic L:ON, H:OFF)								
ISOLATION	INPUT-OUTPUT		DC1,500V 1minute, Cutoff current = 10mA, DC500V 1,000MΩ min (20±15℃)								
	INPUT-CASE		DC1,000V 1minute, Cutoff current = 10mA, DC500V 1,000MΩ min (20±15℃)								
	OUTPUT-CASE		DC1,000V 1minute, Cutoff current = 10mA, DC500V 1,000MΩ min (20±15℃)								
ENVIRONMENT	OPERATING TEMP.,HUMID.AND ALTITUDE		-40 to +85℃, 20 to 95%RH (Non condensing) (Refer to "Derating"), 3,000m (10,000feet) max								
	STORAGE TEMP.,HUMID.AND ALTITUDE		-40 to +100℃, 20 to 95%RH (Non condensing), 9,000m (30,000feet) max								
	VIBRATION		10 - 55Hz, 98.0m/s² (10G), 3minutes period, 60minutes each along X, Y and Z axis								
	IMPACT		490.3m/s² (50G), 11ms, once each along X, Y and Z axis								
SAFETY	AGENCY APPROVALS		UL60950-1, C-UL, EN62368-1								
OTHERS	CASE SIZE/WEIGHT		25.4×9.9×25.4mm [1×0.39×1 inches] (W×H×D) / 20g max								
	COOLING METHOD		Convection/Forced air								

*1 Single output +10V, +24V, +30V with no use of COM.
*2 Rated input 12V, 24V or 48V Io=100%
*3 An output load is 100%, the other load is 5% to 100%.
*4 An output load is 100%, the other load is 20% to 100%.
*5 Refer to the instruction manual 11.
*6 Ripple and Ripple Noise is measured by using test board with ceramic capacitor 22μF at 50mm from output pins. (20MHz Osilloscope)
*7 Drift is the DC output accuracy for eight hours period after a half-hour warm-up at 25℃.
*8 Rated input voltage (DC12V, DC24V, DC48V), rated output wattage, ambient temperature at 25℃.
* Parallel operation with other model is not possible.

External view

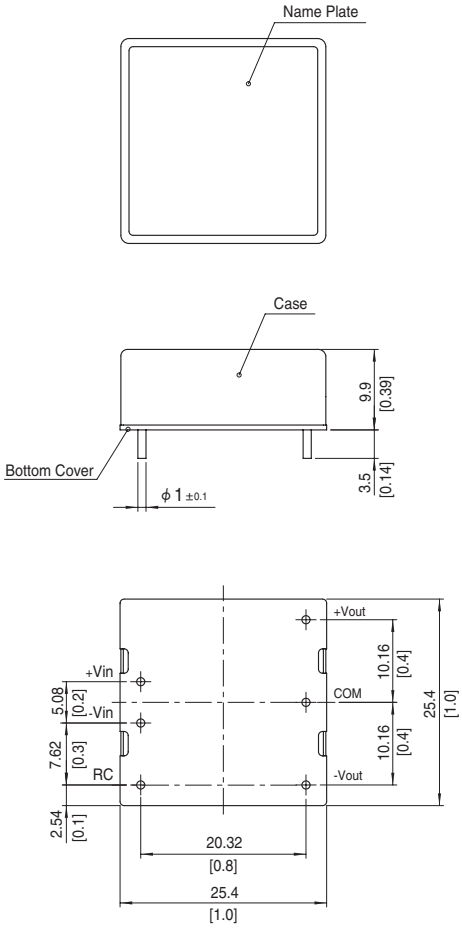

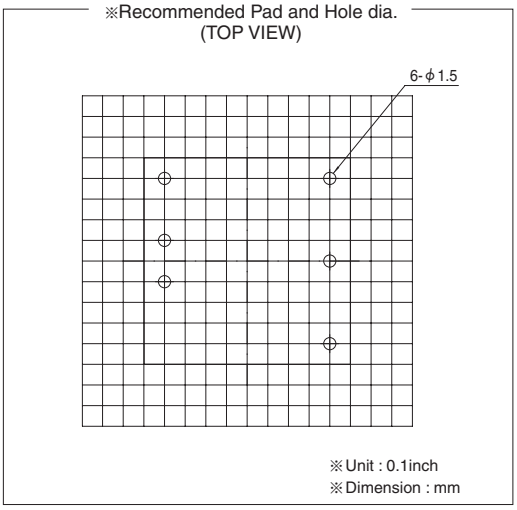

※ Tolerance ±0.5 [±0.02]
※ Dimensions in mm, [ ]=inches
※ Pin terminal material : Copper
※ Plating treatment of terminal : Lead free plating
※ Case material : Brass
※ Plating treatment of case : Nickel plating
※ Bottom Cover : FR4 (t=0.6) [t=0.024]
※ Please keep enough creepage distance with the pattern on PCB and other components.
※ Weight 20g max

COSEL DC-DC Converters PCB Mount Type

MGS30

Ordering information

MG	S	30	24	05	-□
①	②	③	④	⑤	⑥



①Series name
②Single output
③Output wattage
④Input voltage
⑤Output voltage
⑥Optional
G: Capacitor between Input and Output is removed.
R: with Remote ON/OFF (Positive logic control)

MODEL		MGS30123R3	MGS301205	MGS301212	MGS301215	MGS30243R3	MGS302405	MGS302412	MGS302415
MAX OUTPUT WATTAGE[W]		26.4	30	30	30	26.4	30	30	30
DC OUTPUT	VOLTAGE[V] *1	3.3	5	12	15	3.3	5	12	15
	CURRENT[A]	8	6	2.5	2	8	6	2.5	2

SPECIFICATIONS

	MODEL		MGS30123R3	MGS301205	MGS301212	MGS301215	MGS30243R3	MGS302405	MGS302412	MGS302415
INPUT	VOLTAGE[V]		DC9 - 18				DC18 - 36			
	CURRENT[A]	*2	2.45typ	2.75typ	2.78typ	2.78typ	1.21typ	1.36typ	1.36typ	1.36typ
	EFFICIENCY[%]	*2	90typ	91typ	90typ	90typ	91typ	92typ	92typ	92typ
OUTPUT	VOLTAGE[V]		3.3	5	12	15	3.3	5	12	15
	CURRENT[A]		8	6	2.5	2	8	6	2.5	2
	LINE REGULATION[mV]		13.2max	20max	48max	60max	13.2max	20max	48max	60max
	LOAD REGULATION[mV]		13.2max	20max	48max	60max	13.2max	20max	48max	60max
	RIPPLE[mVp-p] *3	-20 to +60℃	75max	75max	100max	100max	75max	75max	100max	100max
		-40 to -20℃	100max	100max	120max	120max	100max	100max	120max	120max
	RIPPLE NOISE[mVp-p] *3	-20 to +60℃	75max	75max	100max	100max	75max	75max	100max	100max
		-40 to -20℃	150max	150max	150max	150max	150max	150max	150max	150max
	TEMPERATURE REGULATION[mV]	-20 to +60℃	50max	50max	150max	180max	50max	50max	150max	180max
		-40 to +60℃	80max	80max	240max	290max	80max	80max	240max	290max
	DRIFT[mV]	*4	20max	20max	48max	60max	20max	20max	48max	60max
	START-UP TIME[ms]		30max (Minimum input, Io=100%)							
	OUTPUT VOLTAGE ADJUSTMENT RANGE		Fixed (TRM pin open) ±10% adjustable by external VR							
	OUTPUT VOLTAGE SETTING[V]	*5	3.296 - 3.404	4.975 - 5.137	11.857 - 12.243	14.839 - 15.321	3.296 - 3.404	4.975 - 5.137	11.857 - 12.243	14.839 - 15.321
PROTECTION CIRCUIT AND OTHERS	OVERCURRENT PROTECTION		Works over 105% of rating and recovers automatically							
	OVERVOLTAGE PROTECTION		Works over 120 to 160% of rating							
	REMOTE ON/OFF		Provided (Negative logic L:ON, H:OFF)							

MODEL		MGS30483R3	MGS304805	MGS304812	MGS304815
MAX OUTPUT WATTAGE[W]		26.4	30	30	30
DC OUTPUT	VOLTAGE[V] *1	3.3	5	12	15
	CURRENT[A]	8	6	2.5	2

SPECIFICATIONS

	MODEL		MGS30483R3	MGS304805	MGS304812	MGS304815
INPUT	VOLTAGE[V]		DC36 - 76			
	CURRENT[A]	*2	0.61typ	0.68typ	0.68typ	0.68typ
	EFFICIENCY[%]	*2	91typ	92typ	92typ	92typ
OUTPUT	VOLTAGE[V]		3.3	5	12	15
	CURRENT[A]		8	6	2.5	2
	LINE REGULATION[mV]		13.2max	20max	48max	60max
	LOAD REGULATION[mV]		13.2max	20max	48max	60max
	RIPPLE[mVp-p] *3	-20 to +60℃	75max	75max	100max	100max
		-40 to -20℃	100max	100max	120max	120max
	RIPPLE NOISE[mVp-p] *3	-20 to +60℃	75max	75max	100max	100max
		-40 to -20℃	150max	150max	150max	150max
	TEMPERATURE REGULATION[mV]	-20 to +60℃	50max	50max	150max	180max
		-40 to +60℃	80max	80max	240max	290max
	DRIFT[mV]	*4	20max	20max	48max	60max
	START-UP TIME[ms]		30max (Minimum input, Io=100%)			
	OUTPUT VOLTAGE ADJUSTMENT RANGE		Fixed (TRM pin open) ±10% adjustable by external VR			
	OUTPUT VOLTAGE SETTING[V]	*5	3.296 - 3.404	4.975 - 5.137	11.857 - 12.243	14.839 - 15.321
PROTECTION CIRCUIT AND OTHERS	OVERCURRENT PROTECTION		Works over 105% of rating and recovers automatically			
	OVERVOLTAGE PROTECTION		Works over 120 to 160% of rating			
	REMOTE ON/OFF		Provided (Negative logic L:ON, H:OFF)			

GENERAL SPECIFICATIONS

ISOLATION	INPUT-OUTPUT	DC1,500V 1minute, Cutoff current = 10mA, DC500V 1,000MΩ min (20±15℃)
	INPUT-CASE	DC1,000V 1minute, Cutoff current = 10mA, DC500V 1,000MΩ min (20±15℃)
	OUTPUT-CASE	DC1,000V 1minute, Cutoff current = 10mA, DC500V 1,000MΩ min (20±15℃)
ENVIRONMENT	OPERATING TEMP.,HUMID.AND ALTITUDE	-40 to +85℃, 20 to 95%RH (Non condensing) (Refer to "Derating"), 3,000m (10,000feet) max
	STORAGE TEMP.,HUMID.AND ALTITUDE	-40 to +100℃, 20 to 95%RH (Non condensing), 9,000m (30,000feet) max
	VIBRATION	10 - 55Hz, 98.0m/s² (10G), 3minutes period, 60minutes each along X, Y and Z axis
	IMPACT	490.3m/s² (50G), 11ms, once each along X, Y and Z axis
SAFETY	AGENCY APPROVALS	UL60950-1, C-UL, EN62368-1
OTHERS	CASE SIZE/WEIGHT	25.4×9.9×50.8mm [1×0.39×2 inches] (W×H×D) / 40g max
	COOLING METHOD	Convection/Forced air

*1 MGW30xx05/MGW30xx12/MGW30xx15 is available as single output, +10V/+24V/+30V
*2 Rated input 12V, 24V or 48V DC Io=100%
*3 Ripple and Ripple Noise is measured by using test board with ceramic capacitor 22μF at 50mm from output pins. (20MHz Osilloscope)
*4 Drift is the DC output accuracy for eight hours period after a half-hour warm-up at 25℃.
*5 Rated input voltage (DC12V, DC24V, DC48V), rated output wattage, ambient temperature at 25℃.
* Parallel operation with other model is not possible.

External view

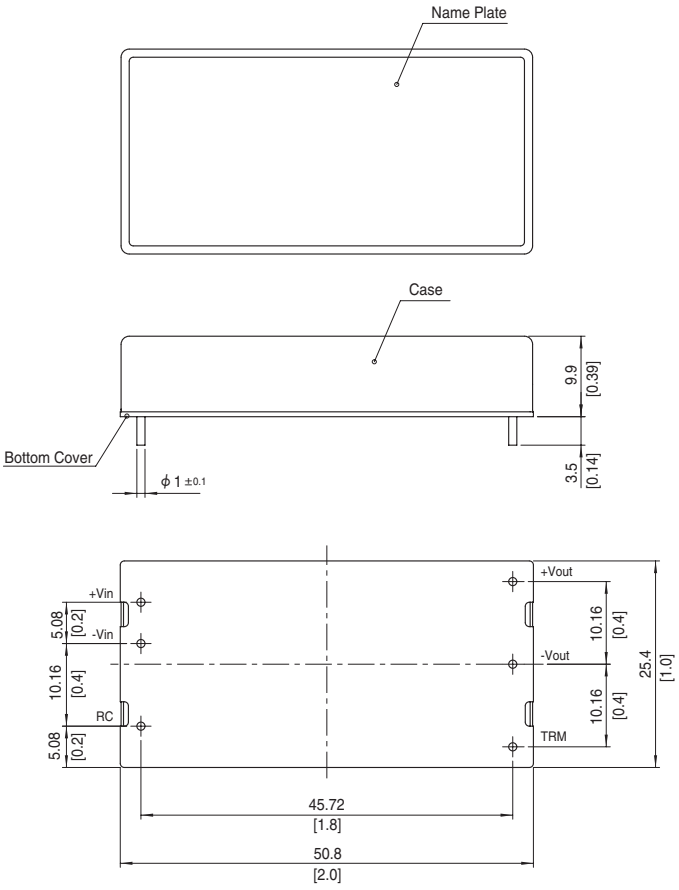

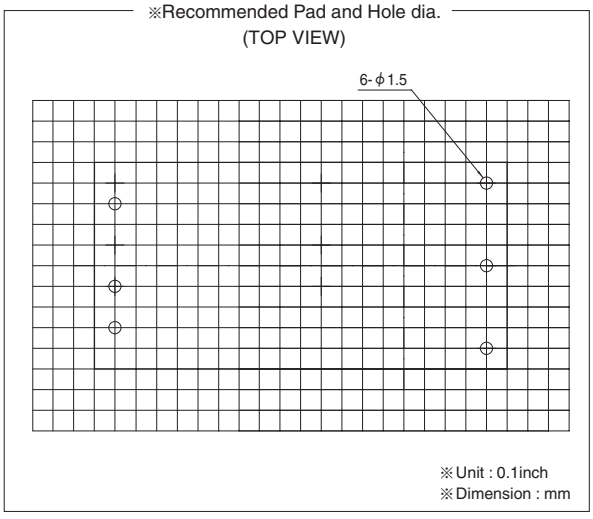

※ Tolerance ±0.5 [±0.02]
※ Dimensions in mm, [ ]=inches
※ Pin terminal material : Copper
※ Plating treatment of terminal : Lead free plating
※ Case material : Brass
※ Plating treatment of case : Nickel plating
※ Bottom Cover : FR4 (t=0.6) [t=0.024]
※ Please keep enough creepage distance with the pattern on PCB and other components.
※ Weight 40g max

COSEL DC-DC Converters PCB Mount Type

MGW30

Ordering information

MG	W	30	24	05	-□
①	②	③	④	⑤	⑥



①Series name
②Dual output
③Output wattage
④Input voltage
⑤Output voltage
⑥Optional
G: Capacitor between Input and Output is removed.
R: with Remote ON/OFF (Positive logic control)

MODEL		MGW301205	MGW301212	MGW301215	MGW302405	MGW302412	MGW302415	MGW304805	MGW304812	MGW304815
MAX OUTPUT WATTAGE[W]		25	30	30	25	30	30	25	30	30
DC OUTPUT	VOLTAGE[V] *1	±5 or +10	±12 or +24	±15 or +30	±5 or +10	±12 or +24	±15 or +30	±5 or +10	±12 or +24	±15 or +30
	CURRENT[A]	2.5	1.25	1	2.5	1.25	1	2.5	1.25	1

SPECIFICATIONS

	MODEL		MGW301205	MGW301212	MGW301215	MGW302405	MGW302412	MGW302415	MGW304805	MGW304812	MGW304815
INPUT	VOLTAGE[V]		DC9 - 18			DC18 - 36			DC36 - 76		
	CURRENT[A]	*2	2.42typ	2.78typ	2.78typ	1.20typ	1.38typ	1.38typ	0.60typ	0.70typ	0.70typ
	EFFICIENCY[%]	*2	86typ	90typ	90typ	87typ	91typ	91typ	87typ	90typ	90typ
OUTPUT	VOLTAGE[V]		±5(+10)	±12(+24)	±15(+30)	±5(+10)	±12(+24)	±15(+30)	±5(+10)	±12(+24)	±15(+30)
	CURRENT[A]		2.5	1.25	1	2.5	1.25	1	2.5	1.25	1
	LINE REGULATION[mV]		40max	60max	75max	40max	60max	75max	40max	60max	75max
	LOAD REGULATION[mV]	*3	500max *5	600max	750max	500max *5	600max	750max	500max *5	600max	750max
		*4	250max	480max	600max	250max	480max	600max	250max	480max	600max
	RIPPLE[mVp-p] *6	-20 to +60℃	100max	100max	100max	100max	100max	100max	100max	100max	100max
		-40 to -20℃	120max	120max	120max	120max	120max	120max	120max	120max	120max
	RIPPLE NOISE[mVp-p] *6	-20 to +60℃	100max	100max	100max	100max	100max	100max	100max	100max	100max
		-40 to -20℃	150max	150max	150max	150max	150max	150max	150max	150max	150max
	TEMPERATURE REGULATION[mV]	-20 to +60℃	50max	150max	180max	50max	150max	180max	50max	150max	180max
		-40 to +60℃	80max	240max	290max	80max	240max	290max	80max	240max	290max
	DRIFT[mV]	*7	50max	50max	60max	50max	50max	60max	50max	50max	60max
	START-UP TIME[ms]		30max (Minimum input, Io=100%)								
	OUTPUT VOLTAGE SETTING[V]	*8	4.935 - 5.240	11.765 - 12.492	14.602 - 15.505	4.935 - 5.240	11.765 - 12.492	14.602 - 15.505	4.935 - 5.240	11.765 - 12.492	14.602 - 15.505
PROTECTION CIRCUIT AND OTHERS	OVERCURRENT PROTECTION		Works over 105% of rating and recovers automatically								
	OVERVOLTAGE PROTECTION		Works over 120 to 160% of rating (Total of +V and -V)								
	REMOTE ON/OFF		Provided (Negative logic L:ON, H:OFF)								
ISOLATION	INPUT-OUTPUT		DC1,500V 1minute, Cutoff current = 10mA, DC500V 1,000MΩ min (20±15℃)								
	INPUT-CASE		DC1,000V 1minute, Cutoff current = 10mA, DC500V 1,000MΩ min (20±15℃)								
	OUTPUT-CASE		DC1,000V 1minute, Cutoff current = 10mA, DC500V 1,000MΩ min (20±15℃)								
ENVIRONMENT	OPERATING TEMP.,HUMID.AND ALTITUDE		-40 to +85℃, 20 to 95%RH (Non condensing) (Refer to "Derating"), 3,000m (10,000feet) max								
	STORAGE TEMP.,HUMID.AND ALTITUDE		-40 to +100℃, 20 to 95%RH (Non condensing), 9,000m (30,000feet) max								
	VIBRATION		10 - 55Hz, 98.0m/s² (10G), 3minutes period, 60minutes each along X, Y and Z axis								
	IMPACT		490.3m/s² (50G), 11ms, once each along X, Y and Z axis								
SAFETY	AGENCY APPROVALS		UL60950-1, C-UL, EN62368-1								
OTHERS	CASE SIZE/WEIGHT		25.4×9.9×50.8mm [1×0.39×2 inches] (W×H×D) / 40g max								
	COOLING METHOD		Convection/Forced air								

*1 Single output +10V, +24V, +30V with no use of COM.
*2 Rated input 12V, 24V or 48V DC Io=100%
*3 Symmetrical loading from 5% to 100%.
*4 Symmetrical loading from 20% to 100%.
*5 Refer to the instruction manual 11.
*6 Ripple and Ripple Noise is measured by using test board with ceramic capacitor 22μF at 50mm from output pins. (20MHz Osilloscope)
*7 Drift is the DC output accuracy for eight hours period after a half-hour warm-up at 25℃.
*8 Rated input voltage (DC12V, DC24V, DC48V), rated output wattage, ambient temperature at 25℃.
* Parallel operation with other model is not possible.

External view

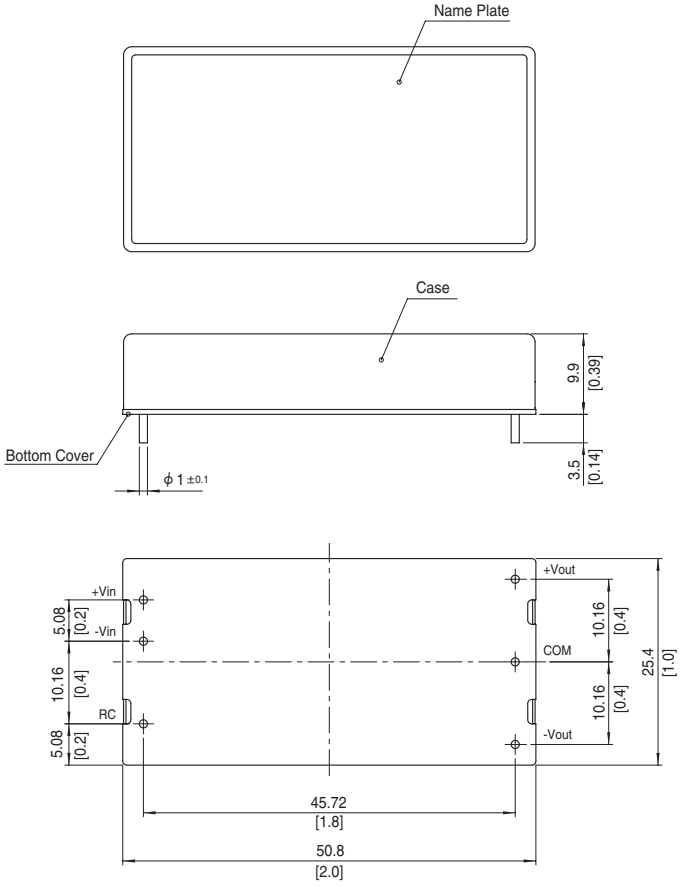

※Recommended Pad and Hole dia.
(TOP VIEW)

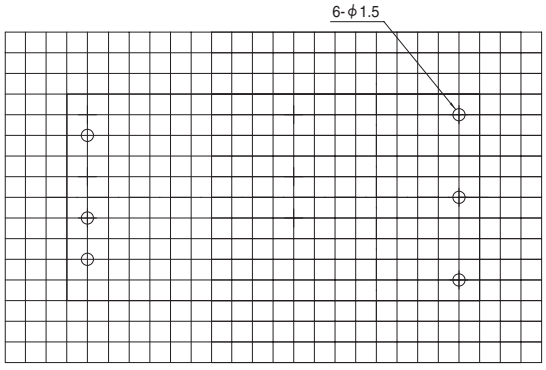

※Unit : 0.1inch
※Dimension : mm

※ Tolerance ±0.5 [±0.02]
※ Dimensions in mm, [ ]=inches
※ Pin terminal material : Copper
※ Plating treatment of terminal : Lead free plating
※ Case material : Brass
※ Plating treatment of case : Nickel plating
※ Bottom Cover : FR4 (t=0.6) [t=0.024]
※ Please keep enough creepage distance with the pattern on PCB and other components.
※ Weight 40g max

COSEL DC-DC Converters PCB Mount Type

MGFS15

Ordering information

MGF ① S ② 15 ③ 24 ④ 05 ⑤ -□ ⑥

①Series name
②Single output
③Output wattage
④Input voltage
⑤Output voltage
⑥Optional
G: Capacitor between Input and Output is removed.
R: with Remote ON/OFF (Positive logic control)

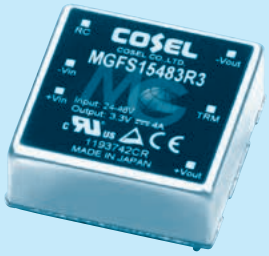

MODEL		MGFS15243R3	MGFS152405	MGFS152412	MGFS152415
MAX OUTPUT WATTAGE[W]		13.2	15	15.6	15
DC OUTPUT	VOLTAGE[V] *1	3.3	5	12	15
	CURRENT[A]	4	3	1.3	1

SPECIFICATIONS

	MODEL		MGFS15243R3	MGFS152405	MGFS152412	MGFS152415
INPUT	VOLTAGE[V]		DC9 - 36			
	CURRENT[A]	*2	0.63typ	0.71typ	0.73typ	0.70typ
	EFFICIENCY[%]	*2	87typ	88typ	89typ	89typ
OUTPUT	VOLTAGE[V]		3.3	5	12	15
	CURRENT[A]		4	3	1.3	1
	LINE REGULATION[mV]		13.2max	20max	48max	60max
	LOAD REGULATION[mV]		13.2max	20max	48max	60max
	RIPPLE[mVp-p] *3	-20 to +60℃	75max	75max	100max	100max
		-40 to -20℃	100max	100max	120max	120max
	RIPPLE NOISE[mVp-p] *3	-20 to +60℃	75max	75max	100max	100max
		-40 to -20℃	150max	150max	150max	150max
	TEMPERATURE REGULATION[mV]	-20 to +60℃	50max	50max	150max	180max
		-40 to +60℃	80max	80max	240max	290max
	DRIFT[mV]	*4	20max	20max	48max	60max
	START-UP TIME[ms]		30max (Minimum input, Io=100%)			
	OUTPUT VOLTAGE ADJUSTMENT RANGE		Fixed (TRM pin open) ±10% adjustable by external VR			
	OUTPUT VOLTAGE SETTING[V]	*5	3.296 - 3.404	4.975 - 5.137	11.857 - 12.243	14.839 - 15.321
PROTECTION CIRCUIT AND OTHERS	OVERCURRENT PROTECTION		Works over 105% of rating and recovers automatically			
	REMOTE ON/OFF		Provided (Negative logic L:ON, H:OFF)			

MODEL		MGFS15483R3	MGFS154805	MGFS154812	MGFS154815
MAX OUTPUT WATTAGE[W]		13.2	15	15.6	15
DC OUTPUT	VOLTAGE[V] *1	3.3	5	12	15
	CURRENT[A]	4	3	1.3	1

SPECIFICATIONS

	MODEL		MGFS15483R3	MGFS154805	MGFS154812	MGFS154815
INPUT	VOLTAGE[V]		DC18 - 76			
	CURRENT[A]	*2	0.32typ	0.36typ	0.37typ	0.35typ
	EFFICIENCY[%]	*2	87typ	88typ	88typ	89typ
OUTPUT	VOLTAGE[V]		3.3	5	12	15
	CURRENT[A]		4	3	1.3	1
	LINE REGULATION[mV]		13.2max	20max	48max	60max
	LOAD REGULATION[mV]		13.2max	20max	48max	60max
	RIPPLE[mVp-p] *3	-20 to +60℃	75max	75max	100max	100max
		-40 to -20℃	100max	100max	120max	120max
	RIPPLE NOISE[mVp-p] *3	-20 to +60℃	75max	75max	100max	100max
		-40 to -20℃	150max	150max	150max	150max
	TEMPERATURE REGULATION[mV]	-20 to +60℃	50max	50max	150max	180max
		-40 to +60℃	80max	80max	240max	290max
	DRIFT[mV]	*4	20max	20max	48max	60max
	START-UP TIME[ms]		30max (Minimum input, Io=100%)			
	OUTPUT VOLTAGE ADJUSTMENT RANGE		Fixed (TRM pin open) ±10% adjustable by external VR			
	OUTPUT VOLTAGE SETTING[V]	*5	3.296 - 3.404	4.975 - 5.137	11.857 - 12.243	14.839 - 15.321
PROTECTION CIRCUIT AND OTHERS	OVERCURRENT PROTECTION		Works over 105% of rating and recovers automatically			
	REMOTE ON/OFF		Provided (Negative logic L:ON, H:OFF)			

GENERAL SPECIFICATIONS

ISOLATION	INPUT-OUTPUT	DC1,500V 1minute, Cutoff current = 10mA, DC500V 1,000MΩ min (20±15℃)
	INPUT-CASE	DC1,000V 1minute, Cutoff current = 10mA, DC500V 1,000MΩ min (20±15℃)
	OUTPUT-CASE	DC1,000V 1minute, Cutoff current = 10mA, DC500V 1,000MΩ min (20±15℃)
ENVIRONMENT	OPERATING TEMP.,HUMID.AND ALTITUDE	-40 to +85℃, 20 to 95%RH (Non condensing) (Refer to "Derating"), 3,000m (10,000feet) max
	STORAGE TEMP.,HUMID.AND ALTITUDE	-40 to +100℃, 20 to 95%RH (Non condensing), 9,000m (30,000feet) max
	VIBRATION	10 - 55Hz, 98.0m/s² (10G), 3minutes period, 60minutes each along X, Y and Z axis
	IMPACT	490.3m/s² (50G), 11ms, once each along X, Y and Z axis
SAFETY	AGENCY APPROVALS	UL60950-1, C-UL, EN62368-1
OTHERS	CASE SIZE/WEIGHT	25.4×9.9×25.4mm [1×0.39×1 inches] (W×H×D) / 20g max
	COOLING METHOD	Convection/Forced air

*1 MGFW15xx05/MGFW15xx12/MGFW15xx15 is available as single output, +10V/+24V/+30V
*2 Rated input 12V, 24V or 48V DC Io=100%
*3 Ripple and Ripple Noise is measured by using test board with ceramic capacitor 22μF at 50mm from output pins. (20MHz Osilloscope)
*4 Drift is the DC output accuracy for eight hours period after a half-hour warm-up at 25℃.
*5 Rated input voltage (DC24V, DC48V), rated output wattage, ambient temperature at 25℃.
* Parallel operation with other model is not possible.

External view

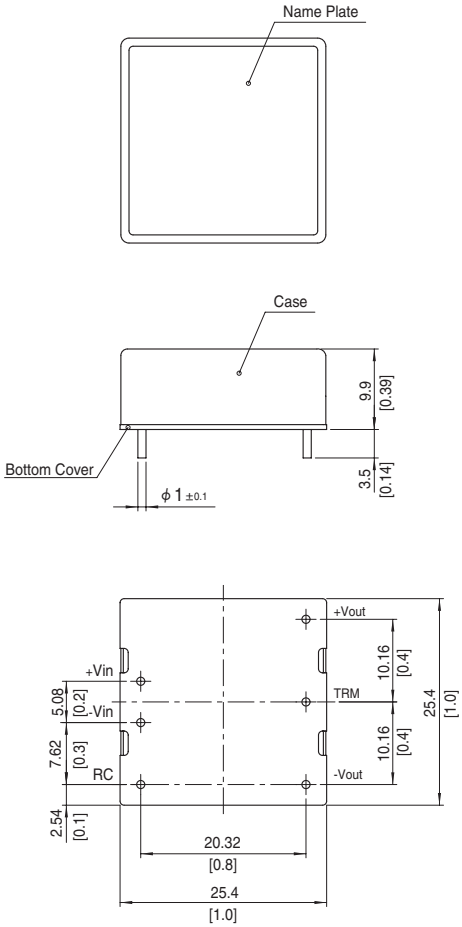

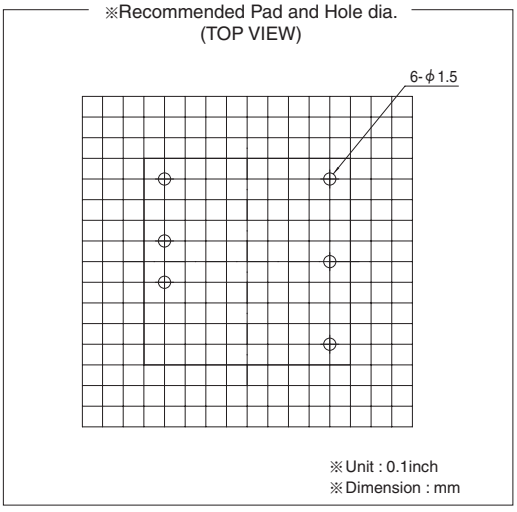

※ Tolerance ±0.5 [±0.02]
※ Dimensions in mm, [ ]=inches
※ Pin terminal material : Copper
※ Plating treatment of terminal : Lead free plating
※ Case material : Brass
※ Plating treatment of case : Nickel plating
※ Bottom Cover : FR4 (t=0.6) [t=0.024]
※ Please keep enough creepage distance with the pattern on PCB and other components.
※ Weight 20g max

COSEL DC-DC Converters PCB Mount Type

MGFW15

Ordering information

MGF	W	15	24	05	-□
①	②	③	④	⑤	⑥

①Series name
②Dual output
③Output wattage
④Input voltage
⑤Output voltage
⑥Optional
G: Capacitor between Input and Output is removed.
R: with Remote ON/OFF (Positive logic control)



MODEL		MGFW152405	MGFW152412	MGFW152415	MGFW154805	MGFW154812	MGFW154815
MAX OUTPUT WATTAGE[W]		15	15.6	15	15	15.6	15
DC OUTPUT	VOLTAGE[V] *1	±5 or +10	±12 or +24	±15 or +30	±5 or +10	±12 or +24	±15 or +30
	CURRENT[A]	1.5	0.65	0.5	1.5	0.65	0.5

SPECIFICATIONS

	MODEL		MGFW152405	MGFW152412	MGFW152415	MGFW154805	MGFW154812	MGFW154815
INPUT	VOLTAGE[V]		DC9 - 36			DC18 - 76		
	CURRENT[A]	*2	0.74typ	0.74typ	0.70typ	0.37typ	0.37typ	0.36typ
	EFFICIENCY[%]	*2	84typ	88typ	89typ	84typ	87typ	88typ
OUTPUT	VOLTAGE[V]		±5(+10)	±12(+24)	±15(+30)	±5(+10)	±12(+24)	±15(+30)
	CURRENT[A]		1.5	0.65	0.5	1.5	0.65	0.5
	LINE REGULATION[mV]		40max	60max	75max	40max	60max	75max
	LOAD REGULATION[mV]	*3	500max *5	600max	750max	500max *5	600max	750max
		*4	250max	480max	600max	250max	480max	600max
	RIPPLE[mVp-p] *6	-20 to +60℃	100max	100max	100max	100max	100max	100max
		-40 to -20℃	120max	120max	120max	120max	120max	120max
	RIPPLE NOISE[mVp-p] *6	-20 to +60℃	100max	100max	100max	100max	100max	100max
		-40 to -20℃	150max	150max	150max	150max	150max	150max
	TEMPERATURE REGULATION[mV]	-20 to +60℃	50max	150max	180max	50max	150max	180max
		-40 to +60℃	80max	240max	290max	80max	240max	290max
	DRIFT[mV]	*7	50max	50max	60max	50max	50max	60max
	START-UP TIME[ms]		30max (Minimum input, Io=100%)					
	OUTPUT VOLTAGE SETTING[V]	*8	4.935 - 5.240	11.765 - 12.492	14.602 - 15.505	4.935 - 5.240	11.765 - 12.492	14.602 - 15.505
PROTECTION CIRCUIT AND OTHERS	OVERCURRENT PROTECTION		Works over 105% of rating and recovers automatically					
	REMOTE ON/OFF		Provided (Negative logic L:ON, H:OFF)					
ISOLATION	INPUT-OUTPUT		DC1,500V 1minute, Cutoff current = 10mA, DC500V 1,000MΩ min (20±15℃)					
	INPUT-CASE		DC1,000V 1minute, Cutoff current = 10mA, DC500V 1,000MΩ min (20±15℃)					
	OUTPUT-CASE		DC1,000V 1minute, Cutoff current = 10mA, DC500V 1,000MΩ min (20±15℃)					
ENVIRONMENT	OPERATING TEMP.,HUMID.AND ALTITUDE		-40 to +85℃, 20 to 95%RH (Non condensing) (Refer to "Derating"), 3,000m (10,000feet) max					
	STORAGE TEMP.,HUMID.AND ALTITUDE		-40 to +100℃, 20 to 95%RH (Non condensing), 9,000m (30,000feet) max					
	VIBRATION		10 - 55Hz, 98.0m/s² (10G), 3minutes period, 60minutes each along X, Y and Z axis					
	IMPACT		490.3m/s² (50G), 11ms, once each along X, Y and Z axis					
SAFETY	AGENCY APPROVALS		UL60950-1, C-UL, EN62368-1					
OTHERS	CASE SIZE/WEIGHT		25.4×9.9×25.4mm [1×0.39×1 inches] (W×H×D) / 20g max					
	COOLING METHOD		Convection/Forced air					

*1 Single output +10V, +24V, +30V with no use of COM.
*2 Rated input 12V, 24V or 48V DC Io=100%
*3 Symmetrical loading from 5% to 100%.
*4 Symmetrical loading from 20% to 100%.
*5 Refer to the instruction manual 11.
*6 Ripple and Ripple Noise is measured by using test board with ceramic capacitor 22μF at 50mm from output pins. (20MHz Osilloscope)
*7 Drift is the DC output accuracy for eight hours period after a half-hour warm-up at 25℃.
*8 Rated input voltage (DC24V, DC48V), rated output wattage, ambient temperature at 25℃.
* Parallel operation with other model is not possible.

External view

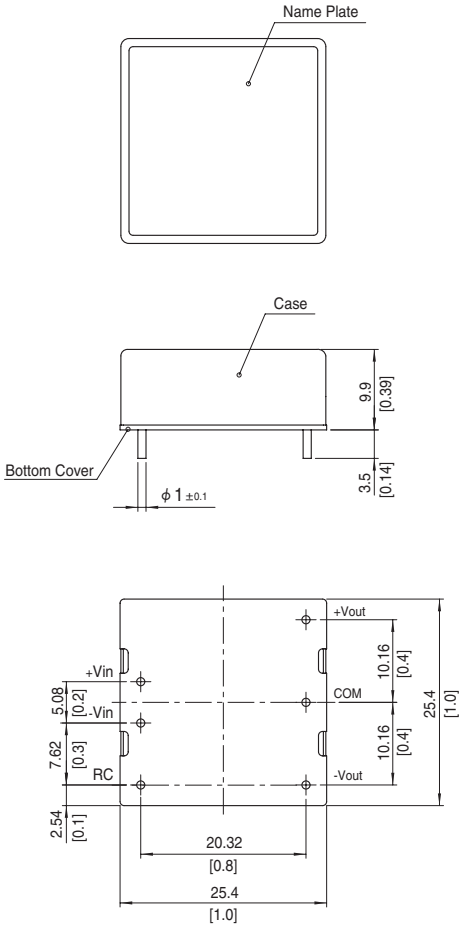

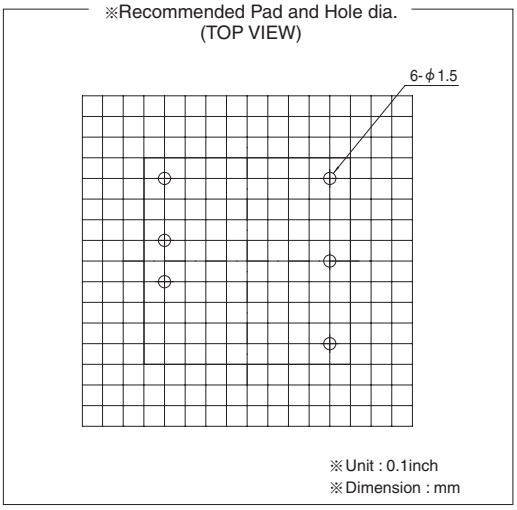

※ Tolerance ±0.5 [±0.02]
※ Dimensions in mm, [ ]=inches
※ Pin terminal material : Copper
※ Plating treatment of terminal : Lead free plating
※ Case material : Brass
※ Plating treatment of case : Nickel plating
※ Bottom Cover : FR4 (t=0.6) [t=0.024]
※ Please keep enough creepage distance with the pattern on PCB and other components.
※ Weight 20g max

COSEL DC-DC Converters PCB Mount Type

MGFS30

Ordering information

MGF	S	30	24	05	-□
①	②	③	④	⑤	⑥



①Series name
②Single output
③Output wattage
④Input voltage
⑤Output voltage
⑥Optional
G: Capacitor between Input and Output is removed.
R: with Remote ON/OFF (Positive logic control)

MODEL		MGFS30243R3	MGFS302405	MGFS302412	MGFS302415
MAX OUTPUT WATTAGE[W]		24.75	30	30	30
DC OUTPUT	VOLTAGE[V] *1	3.3	5	12	15
	CURRENT[A]	7.5	6	2.5	2

SPECIFICATIONS

	MODEL		MGFS30243R3	MGFS302405	MGFS302412	MGFS302415
INPUT	VOLTAGE[V]		DC9 - 36			
	CURRENT[A]	*2	1.16typ	1.39typ	1.40typ	1.40typ
	EFFICIENCY[%]	*2	89typ	90typ	89typ	89typ
OUTPUT	VOLTAGE[V]		3.3	5	12	15
	CURRENT[A]		7.5	6	2.5	2
	LINE REGULATION[mV]		13.2max	20max	48max	60max
	LOAD REGULATION[mV]		13.2max	20max	48max	60max
	RIPPLE[mVp-p] *3	-20 to +60℃	75max	75max	100max	100max
		-40 to -20℃	100max	100max	120max	120max
	RIPPLE NOISE[mVp-p] *3	-20 to +60℃	75max	75max	100max	100max
		-40 to -20℃	150max	150max	150max	150max
	TEMPERATURE REGULATION[mV]	-20 to +60℃	50max	50max	150max	180max
		-40 to +60℃	80max	80max	240max	290max
	DRIFT[mV]	*4	20max	20max	48max	60max
	START-UP TIME[ms]		30max (Minimum input, Io=100%)			
	OUTPUT VOLTAGE ADJUSTMENT RANGE		Fixed (TRM pin open) ±10% adjustable by external VR			
	OUTPUT VOLTAGE SETTING[V]	*5	3.296 - 3.404	4.975 - 5.137	11.857 - 12.243	14.839 - 15.321
PROTECTION CIRCUIT AND OTHERS	OVERCURRENT PROTECTION		Works over 105% of rating and recovers automatically			
	OVERVOLTAGE PROTECTION		Works over 120 to 160% of rating			
	REMOTE ON/OFF		Provided (Negative logic L:ON, H:OFF)			

MODEL		MGFS30483R3	MGFS304805	MGFS304812	MGFS304815
MAX OUTPUT WATTAGE[W]		24.75	30	30	30
DC OUTPUT	VOLTAGE[V] *1	3.3	5	12	15
	CURRENT[A]	7.5	6	2.5	2

SPECIFICATIONS

	MODEL		MGFS30483R3	MGFS304805	MGFS304812	MGFS304815
INPUT	VOLTAGE[V]		DC18 - 76			
	CURRENT[A]	*2	0.58typ	0.70typ	0.70typ	0.70typ
	EFFICIENCY[%]	*2	89typ	90typ	89typ	89typ
OUTPUT	VOLTAGE[V]		3.3	5	12	15
	CURRENT[A]		7.5	6	2.5	2
	LINE REGULATION[mV]		13.2max	20max	48max	60max
	LOAD REGULATION[mV]		13.2max	20max	48max	60max
	RIPPLE[mVp-p] *3	-20 to +60℃	75max	75max	100max	100max
		-40 to -20℃	100max	100max	120max	120max
	RIPPLE NOISE[mVp-p] *3	-20 to +60℃	75max	75max	100max	100max
		-40 to -20℃	150max	150max	150max	150max
	TEMPERATURE REGULATION[mV]	-20 to +60℃	50max	50max	150max	180max
		-40 to +60℃	80max	80max	240max	290max
	DRIFT[mV]	*4	20max	20max	48max	60max
	START-UP TIME[ms]		30max (Minimum input, Io=100%)			
	OUTPUT VOLTAGE ADJUSTMENT RANGE		Fixed (TRM pin open) ±10% adjustable by external VR			
	OUTPUT VOLTAGE SETTING[V]	*5	3.296 - 3.404	4.975 - 5.137	11.857 - 12.243	14.839 - 15.321
PROTECTION CIRCUIT AND OTHERS	OVERCURRENT PROTECTION		Works over 105% of rating and recovers automatically			
	OVERVOLTAGE PROTECTION		Works over 120 to 160% of rating			
	REMOTE ON/OFF		Provided (Negative logic L:ON, H:OFF)			

GENERAL SPECIFICATIONS

ISOLATION	INPUT-OUTPUT	DC1,500V 1minute, Cutoff current = 10mA, DC500V 1,000MΩ min (20±15℃)
	INPUT-CASE	DC1,000V 1minute, Cutoff current = 10mA, DC500V 1,000MΩ min (20±15℃)
	OUTPUT-CASE	DC1,000V 1minute, Cutoff current = 10mA, DC500V 1,000MΩ min (20±15℃)
ENVIRONMENT	OPERATING TEMP.,HUMID.AND ALTITUDE	-40 to +85℃, 20 to 95%RH (Non condensing) (Refer to "Derating"), 3,000m (10,000feet) max
	STORAGE TEMP.,HUMID.AND ALTITUDE	-40 to +100℃, 20 to 95%RH (Non condensing), 9,000m (30,000feet) max
	VIBRATION	10 - 55Hz, 98.0m/s² (10G), 3minutes period, 60minutes each along X, Y and Z axis
	IMPACT	490.3m/s² (50G), 11ms, once each along X, Y and Z axis
SAFETY	AGENCY APPROVALS	UL60950-1, C-UL, EN62368-1
OTHERS	CASE SIZE/WEIGHT	25.4×9.9×50.8mm [1×0.39×2 inches] (W×H×D) / 40g max
	COOLING METHOD	Convection/Forced air

*1 MGFW30xx05/MGFW30xx12/MGFW30xx15 is available as single output, +10V/+24V/+30V
*2 Rated input 12V, 24V or 48V DC Io=100%
*3 Ripple and Ripple Noise is measured by using test board with ceramic capacitor 22μF at 50mm from output pins. (20MHz Osilloscope)
*4 Drift is the DC output accuracy for eight hours period after a half-hour warm-up at 25℃.
*5 Rated input voltage (DC24V, DC48V), rated output wattage, ambient temperature at 25℃.
* Parallel operation with other model is not possible.

External view

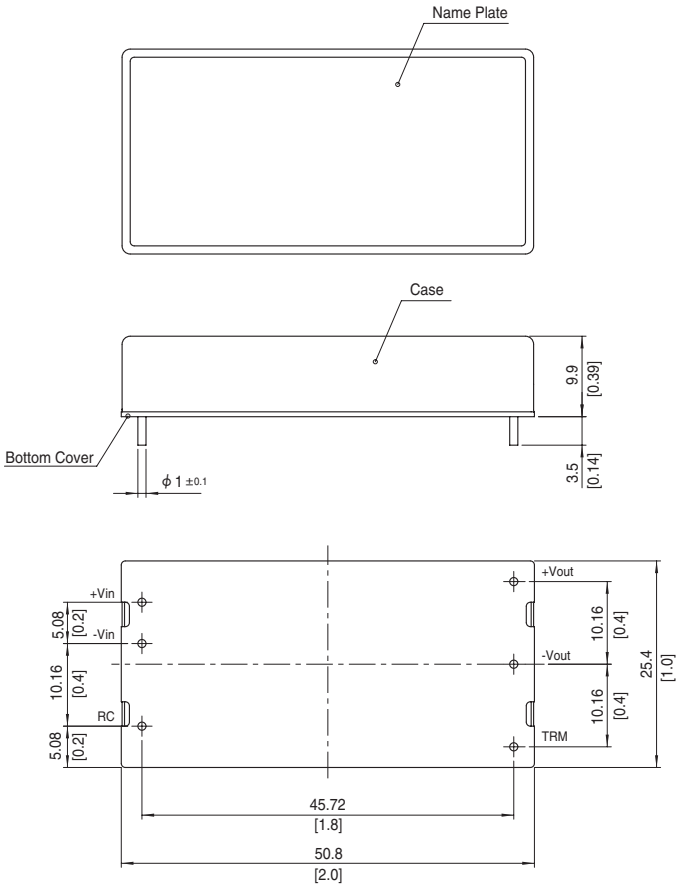

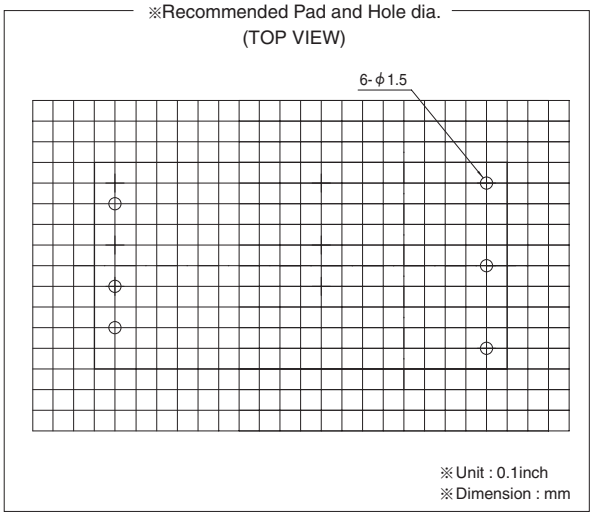

※ Tolerance ±0.5 [±0.02]
※ Dimensions in mm, [ ]=inches
※ Pin terminal material : Copper
※ Plating treatment of terminal : Lead free plating
※ Case material : Brass
※ Plating treatment of case : Nickel plating
※ Bottom Cover : FR4 (t=0.6) [t=0.024]
※ Please keep enough creepage distance with the pattern on PCB and other components.
※ Weight 40g max

COSEL DC-DC Converters PCB Mount Type

MGFW30

Ordering information

MGF	W	30	24	05	-□
①	②	③	④	⑤	⑥



①Series name
②Dual output
③Output wattage
④Input voltage
⑤Output voltage
⑥Optional
G: Capacitor between Input and Output is removed.
R: with Remote ON/OFF (Positive logic control)

MODEL		MGFW302405	MGFW302412	MGFW302415	MGFW304805	MGFW304812	MGFW304815
MAX OUTPUT WATTAGE[W]		20	30	30	20	30	30
DC OUTPUT	VOLTAGE[V] *1	±5 or +10	±12 or +24	±15 or +30	±5 or +10	±12 or +24	±15 or +30
	CURRENT[A]	2	1.25	1	2	1.25	1

SPECIFICATIONS

	MODEL		MGFW302405	MGFW302412	MGFW302415	MGFW304805	MGFW304812	MGFW304815
INPUT	VOLTAGE[V]		DC9 - 36			DC18 - 76		
	CURRENT[A]	*2	0.98typ	1.42typ	1.44typ	0.49typ	0.71typ	0.72typ
	EFFICIENCY[%]	*2	85typ	88typ	87typ	85typ	88typ	87typ
OUTPUT	VOLTAGE[V]		±5(+10)	±12(+24)	±15(+30)	±5(+10)	±12(+24)	±15(+30)
	CURRENT[A]		2	1.25	1	2	1.25	1
	LINE REGULATION[mV]		40max	60max	75max	40max	60max	75max
	LOAD REGULATION[mV]	*3	500max *5	600max	750max	500max *5	600max	750max
		*4	250max	480max	600max	250max	480max	600max
	RIPPLE[mVp-p] *6	-20 to +60℃	100max	100max	100max	100max	100max	100max
		-40 to -20℃	120max	120max	120max	120max	120max	120max
	RIPPLE NOISE[mVp-p] *6	-20 to +60℃	100max	100max	100max	100max	100max	100max
		-40 to -20℃	150max	150max	150max	150max	150max	150max
	TEMPERATURE REGULATION[mV]	-20 to +60℃	50max	150max	180max	50max	150max	180max
		-40 to +60℃	80max	240max	290max	80max	240max	290max
	DRIFT[mV]	*7	50max	50max	60max	50max	50max	60max
	START-UP TIME[ms]		30max (Minimum input, Io=100%)					
	OUTPUT VOLTAGE SETTING[V]	*8	4.935 - 5.240	11.765 - 12.492	14.602 - 15.505	4.935 - 5.240	11.765 - 12.492	14.602 - 15.505
PROTECTION CIRCUIT AND OTHERS	OVERCURRENT PROTECTION		Works over 105% of rating and recovers automatically					
	OVERVOLTAGE PROTECTION		Works over 120 to 160% of rating (Total of +V and -V)					
	REMOTE ON/OFF		Provided (Negative logic L:ON, H:OFF)					
ISOLATION	INPUT-OUTPUT		DC1,500V 1minute, Cutoff current = 10mA, DC500V 1,000MΩ min (20±15℃)					
	INPUT-CASE		DC1,000V 1minute, Cutoff current = 10mA, DC500V 1,000MΩ min (20±15℃)					
	OUTPUT-CASE		DC1,000V 1minute, Cutoff current = 10mA, DC500V 1,000MΩ min (20±15℃)					
ENVIRONMENT	OPERATING TEMP.,HUMID.AND ALTITUDE		-40 to +85℃, 20 to 95%RH (Non condensing) (Refer to "Derating"), 3,000m (10,000feet) max					
	STORAGE TEMP.,HUMID.AND ALTITUDE		-40 to +100℃, 20 to 95%RH (Non condensing), 9,000m (30,000feet) max					
	VIBRATION		10 - 55Hz, 98.0m/s² (10G), 3minutes period, 60minutes each along X, Y and Z axis					
	IMPACT		490.3m/s² (50G), 11ms, once each along X, Y and Z axis					
SAFETY	AGENCY APPROVALS		UL60950-1, C-UL, EN62368-1					
OTHERS	CASE SIZE/WEIGHT		25.4×9.9×50.8mm [1×0.39×2 inches] (W×H×D) / 40g max					
	COOLING METHOD		Convection/Forced air					

*1 Single output +10V, +24V, +30V with no use of COM.
*2 Rated input 12V, 24V or 48V DC Io=100%
*3 Symmetrical loading from 5% to 100%.
*4 Symmetrical loading from 20% to 100%.
*5 Refer to the instruction manual 11.
*6 Ripple and Ripple Noise is measured by using test board with ceramic capacitor 22μF at 50mm from output pins. (20MHz Osilloscope)
*7 Drift is the DC output accuracy for eight hours period after a half-hour warm-up at 25℃.
*8 Rated input voltage (DC24V, DC48V), rated output wattage, ambient temperature at 25℃.
* Parallel operation with other model is not possible.

External view

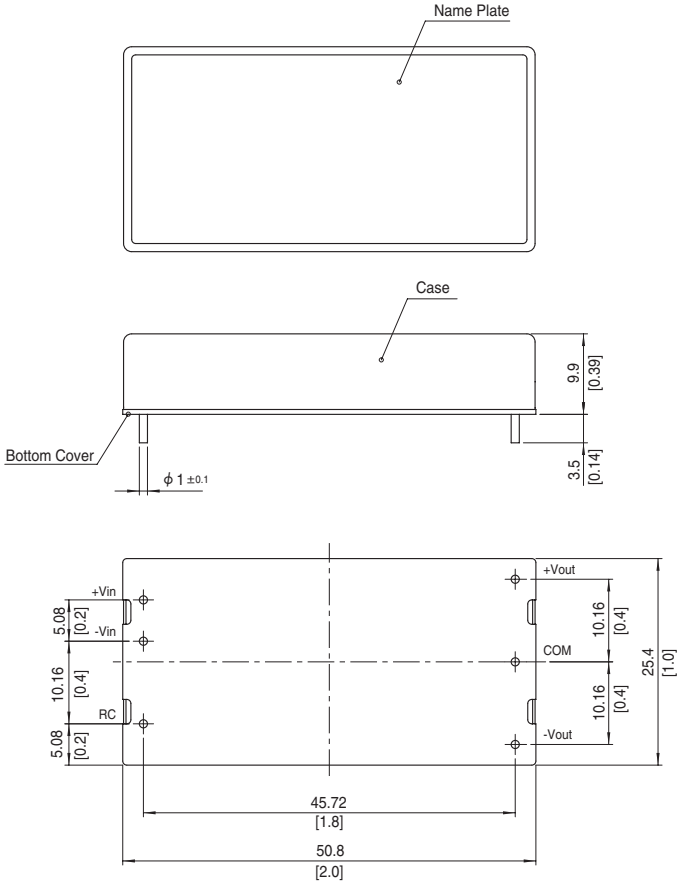

※Recommended Pad and Hole dia.
(TOP VIEW)

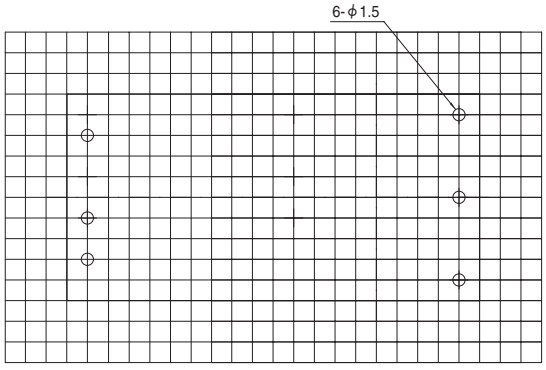

※Unit : 0.1inch
※Dimension : mm

※ Tolerance ±0.5 [±0.02]
※ Dimensions in mm, [ ]=inches
※ Pin terminal material : Copper
※ Plating treatment of terminal : Lead free plating
※ Case material : Brass
※ Plating treatment of case : Nickel plating
※ Bottom Cover : FR4 (t=0.6) [t=0.024]
※ Please keep enough creepage distance with the pattern on PCB and other components.
※ Weight 40g max

COSEL DC-DC Converters PCB Mount Type

MGFS40

Ordering information

MGF ① S ② 40 ③ 24 ④ 05 ⑤ - □ ⑥



①Series name
②Single output
③Output wattage
④Input voltage
⑤Output voltage
⑥Optional
G: Capacitor between Input and Output is removed.
R: with Remote ON/OFF (Positive logic control)

MODEL		MGFS40053R3	MGFS400505	MGFS400512	MGFS400515	MGFS40243R3	MGFS402405	MGFS402412	MGFS402415
MAX OUTPUT WATTAGE[W]		26.4	30	30	30	33	40	40.8	40.5
DC OUTPUT	VOLTAGE[V] *1	3.3	5	12	15	3.3	5	12	15
	CURRENT[A]	8	6	2.5	2	10	8	3.4	2.7

SPECIFICATIONS

	MODEL		MGFS40053R3	MGFS400505	MGFS400512	MGFS400515	MGFS40243R3	MGFS402405	MGFS402412	MGFS402415
INPUT	VOLTAGE[V]		DC4.5 - 13 (Surge Voltage 15V, 100ms max)				DC9 - 36 (Surge Voltage 50V, 100ms max)			
	CURRENT[A]	*2	6.21typ	6.90typ	6.90typ	6.82typ	1.54typ	1.83typ	1.85typ	1.83typ
	EFFICIENCY[%]	*2	85typ	87typ	87typ	88typ	89typ	91typ	92typ	92typ
OUTPUT	VOLTAGE[V]		3.3	5	12	15	3.3	5	12	15
	CURRENT[A]		8	6	2.5	2	10	8	3.4	2.7
	LINE REGULATION[mV]		13.2max	20max	48max	60max	13.2max	20max	48max	60max
	LOAD REGULATION[mV]		13.2max	20max	48max	60max	13.2max	20max	48max	60max
	RIPPLE[mVp-p]	-20 to +60℃	75max	75max	100max	100max	75max	75max	100max	100max
	*3	-40 to -20℃	100max	100max	120max	120max	100max	100max	120max	120max
	RIPPLE NOISE[mVp-p]	-20 to +60℃	75max	75max	100max	100max	75max	75max	100max	100max
	*3	-40 to -20℃	150max	150max	150max	150max	150max	150max	150max	150max
	TEMPERATURE REGULATION[mV]	-20 to +60℃	50max	50max	150max	180max	50max	50max	150max	180max
		-40 to +60℃	80max	80max	240max	290max	80max	80max	240max	290max
	DRIFT[mV]	*4	20max	20max	48max	60max	20max	20max	48max	60max
	START-UP TIME[ms]		30max (Minimum input, Rated load)							
	OUTPUT VOLTAGE ADJUSTMENT RANGE		Fixed (TRM pin open) ±10% adjustable by external VR							
	OUTPUT VOLTAGE SETTING[V]	*5	3.296 - 3.404	4.975 - 5.137	11.857 - 12.243	14.839 - 15.321	3.296 - 3.404	4.975 - 5.137	11.857 - 12.243	14.839 - 15.321
PROTECTION CIRCUIT AND OTHERS	OVERCURRENT PROTECTION		Works over 105% of rating and recovers automatically							
	OVERVOLTAGE PROTECTION		Work over 115 to 140% of rating							
	REMOTE ON/OFF		Provided (Negative logic L:ON, H:OFF)							

MODEL		MGFS40483R3	MGFS404805	MGFS404812	MGFS404815
MAX OUTPUT WATTAGE[W]		33	40	40.8	40.5
DC OUTPUT	VOLTAGE[V] *1	3.3	5	12	15
	CURRENT[A]	10	8	3.4	2.7

SPECIFICATIONS

	MODEL		MGFS40483R3	MGFS404805	MGFS404812	MGFS404815
INPUT	VOLTAGE[V]		DC18 - 76 (Surge Voltage 100V, 100ms max)			
	CURRENT[A]	*2	0.77typ	0.92typ	0.92typ	0.92typ
	EFFICIENCY[%]	*2	89typ	91typ	92typ	92typ
OUTPUT	VOLTAGE[V]		3.3	5	12	15
	CURRENT[A]		10	8	3.4	2.7
	LINE REGULATION[mV]		13.2max	20max	48max	60max
	LOAD REGULATION[mV]		13.2max	20max	48max	60max
	RIPPLE[mVp-p]	-20 to +60℃	75max	75max	100max	100max
	*3	-40 to -20℃	100max	100max	120max	120max
	RIPPLE NOISE[mVp-p]	-20 to +60℃	75max	75max	100max	100max
	*3	-40 to -20℃	150max	150max	150max	150max
	TEMPERATURE REGULATION[mV]	-20 to +60℃	50max	50max	150max	180max
		-40 to +60℃	80max	80max	240max	290max
	DRIFT[mV]	*4	20max	20max	48max	60max
	START-UP TIME[ms]		30max (Minimum input, Rated load)			
	OUTPUT VOLTAGE ADJUSTMENT RANGE		Fixed (TRM pin open) ±10% adjustable by external VR			
	OUTPUT VOLTAGE SETTING[V]	*5	3.296 - 3.404	4.975 - 5.137	11.857 - 12.243	14.839 - 15.321
PROTECTION CIRCUIT AND OTHERS	OVERCURRENT PROTECTION		Works over 105% of rating and recovers automatically			
	OVERVOLTAGE PROTECTION		Work over 115 to 140% of rating			
	REMOTE ON/OFF		Provided (Negative logic L:ON, H:OFF)			

GENERAL SPECIFICATIONS

ISOLATION	INPUT-OUTPUT	DC1,500V 1minute, Cutoff current = 10mA, DC500V 1,000MΩ min (20±15℃)
	INPUT-CASE	DC1,000V 1minute, Cutoff current = 10mA, DC500V 1,000MΩ min (20±15℃)
	OUTPUT-CASE	DC1,000V 1minute, Cutoff current = 10mA, DC500V 1,000MΩ min (20±15℃)
ENVIRONMENT	OPERATING TEMP.,HUMID.AND ALTITUDE	-40 to +85℃, 20 to 95%RH (Non condensing) (Refer to "Derating"), 5,000m (16,400feet) max
	STORAGE TEMP.,HUMID.AND ALTITUDE	-40 to +100℃, 20 to 95%RH (Non condensing), 9,000m (30,000feet) max
	VIBRATION	10 - 55Hz, 98.0m/s² (10G), 3minutes period, 60minutes each along X, Y and Z axis
	IMPACT	490.3m/s² (50G), 11ms, once each along X, Y and Z axis
SAFETY	AGENCY APPROVALS	UL62368-1, C-UL(CSA62368-1), EN62368-1
OTHERS	CASE SIZE/WEIGHT	25.4×9.9×25.4mm (W×H×D) / 30g max
	COOLING METHOD	Convection/Forced air

*1 MGFW40xx12/MGFW40xx15 is available as single output +24V/+30V
*2 Rated input voltage (DC5V, DC24V, DC48V) Io=100%
*3 Riple and Ripple Noise is measured by using test board with ceramic capacitor 22μF and Recommended Capacitance at 50mm from output pins. (20MHz Oscilloscope)
*4 Drift is the DC output accuracy for eight hour period after a half-hour warm-up at 25℃
*5 Rated input voltage (DC5V, DC24V, DC48V), rated output wattage, ambient temperature at 25℃
* Parallel operation with other model is not possible.

External view

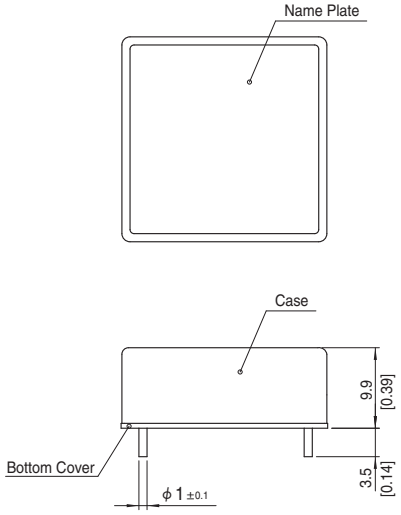

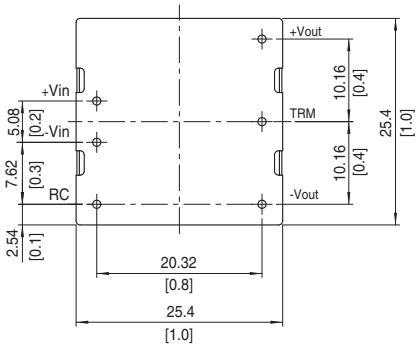

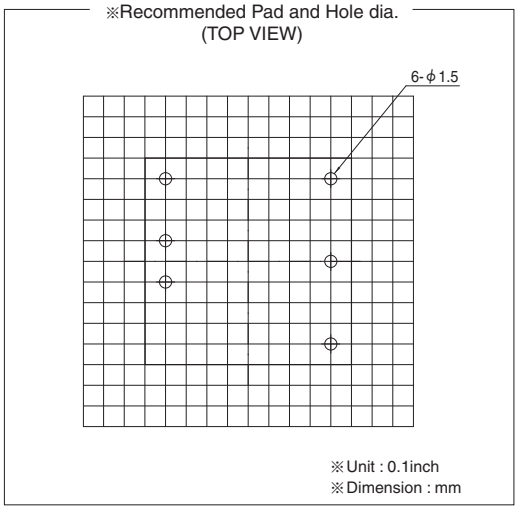

※ Tolerance ±0.5 [±0.02]
※ Dimensions in mm, [ ]=inches
※ Pin terminal material : Copper
※ Plating treatment of terminal : Lead free plating
※ Case material : Brass
※ Plating treatment of case : Nickel plating
※ Bottom Cover : FR4 (t=0.6) [t=0.024]
※ Please keep enough creepage distance with the pattern on PCB and other components.
※ Weight 30g max

COSEL DC-DC Converters PCB Mount Type

MGFW40

Ordering information

MGF	W	40	24	12	-□
①	②	③	④	⑤	⑥



①Series name
②Dual output
③Output wattage
④Input voltage
⑤Output voltage
⑥Optional
G: Capacitor between Input and Output is removed.
R: with Remote ON/OFF (Positive logic control)

MODEL			MGFW400512	MGFW400515	MGFW402412	MGFW402415	MGFW404812	MGFW404815
MAX OUTPUT WATTAGE[W]			31.2	30	40.8	42	40.8	42
DC OUTPUT	VOLTAGE[V]	*1	±12 or +24	±15 or +30	±12 or +24	±15 or +30	±12 or +24	±15 or +30
	CURRENT[A]		1.3	1	1.7	1.4	1.7	1.4

SPECIFICATIONS

	MODEL		MGFW400512	MGFW400515	MGFW402412	MGFW402415	MGFW404812	MGFW404815
INPUT	VOLTAGE[V]		DC4.5 - 13 (Surge Voltage 15V, 100ms max)		DC9 - 36 (Surge Voltage 50V, 100ms max)		DC18 - 76 (Surge Voltage 100V, 100ms max)	
	CURRENT[A]	*2	7.26typ	6.90typ	1.87typ	1.92typ	0.93typ	0.96typ
	EFFICIENCY[%]	*2	86typ	87typ	91typ	91typ	91typ	91typ
OUTPUT	VOLTAGE[V]		±12(+24)	±15(+30)	±12(+24)	±15(+30)	±12(+24)	±15(+30)
	CURRENT[A]		1.3	1	1.7	1.4	1.7	1.4
	LINE REGULATION[mV]		60max	75max	60max	75max	60max	75max
	LOAD REGULATION[mV]	*3	600max	750max	600max	750max	600max	750max
		*4	480max	600max	480max	600max	480max	600max
	RIPPLE[mVp-p] *5	-20 to +60℃	100max	100max	100max	100max	100max	100max
		-40 to -20℃	120max	120max	120max	120max	120max	120max
	RIPPLE NOISE[mVp-p] *5	-20 to +60℃	100max	100max	100max	100max	100max	100max
		-40 to -20℃	150max	150max	150max	150max	150max	150max
	TEMPERATURE REGULATION[mV]	-20 to +60℃	150max	180max	150max	180max	150max	180max
		-40 to +60℃	240max	290max	240max	290max	240max	290max
	DRIFT[mV]	*6	50max	60max	50max	60max	50max	60max
	START-UP TIME[ms]		30max (Minimum input, Rated load)					
	OUTPUT VOLTAGE SETTING[V]	*7	11.765 - 12.492	14.602 - 15.505	11.765 - 12.492	14.602 - 15.505	11.765 - 12.492	14.602 - 15.505
PROTECTION CIRCUIT AND OTHERS	OVERCURRENT PROTECTION		Works over 105% of rating and recovers automatically					
	OVERVOLTAGE PROTECTION		Work over 115 to 140% of rating (Total of +Vo and -Vo)					
	REMOTE ON/OFF		Provided (Negative logic L:ON, H:OFF)					
ISOLATION	INPUT-OUTPUT		DC1,500V 1minute, Cutoff current = 10mA, DC500V 1,000MΩ min (20±15℃)					
	INPUT-CASE		DC1,000V 1minute, Cutoff current = 10mA, DC500V 1,000MΩ min (20±15℃)					
	OUTPUT-CASE		DC1,000V 1minute, Cutoff current = 10mA, DC500V 1,000MΩ min (20±15℃)					
ENVIRONMENT	OPERATING TEMP.,HUMID.AND ALTITUDE		-40 to +85℃, 20 to 95%RH (Non condensing) (Refer to "Derating"), 5,000m (16,400feet) max					
	STORAGE TEMP.,HUMID.AND ALTITUDE		-40 to +100℃, 20 to 95%RH (Non condensing), 9,000m (30,000feet) max					
	VIBRATION		10 - 55Hz, 98.0m/s² (10G), 3minutes period, 60minutes each along X, Y and Z axis					
	IMPACT		490.3m/s² (50G), 11ms, once each along X, Y and Z axis					
SAFETY	AGENCY APPROVALS		UL62368-1, C-UL (CSA62368-1), EN62368-1					
OTHERS	CASE SIZE/WEIGHT		25.4×9.9×25.4mm (W×H×D) / 30g max					
	COOLING METHOD		Convection/Forced air					

*1 Single output +24V/+30V with no use of COM
*2 Rated input voltage(DC5V , DC24V, DC48V) Io=100%
*3 Symmetrical loading from 0% to 100%
*4 Symmetrical loading from 20% to 100%
*5 Riple and Ripple Noise is measured by using test board with ceramic capacitor 22μF and Recommended Capacitance at 50mm from output pins. (20MHz Oscilloscope)
*6 Drift is the DC output accuracy for eight hour period after a half-hour warm-up at 25℃
*7 Rated input voltage (DC5V, DC24V, DC48V), rated output wattage, ambient temperature at 25℃
* Parallel operation with other model is not possible.

External view

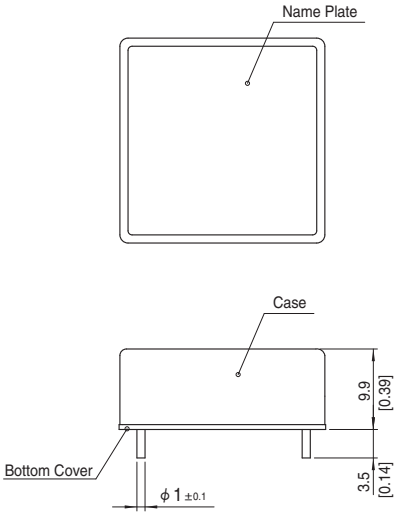

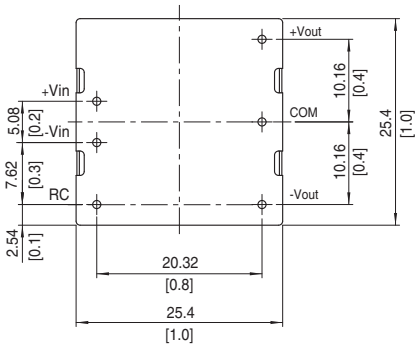

※Recommended Pad and Hole dia.
(TOP VIEW)

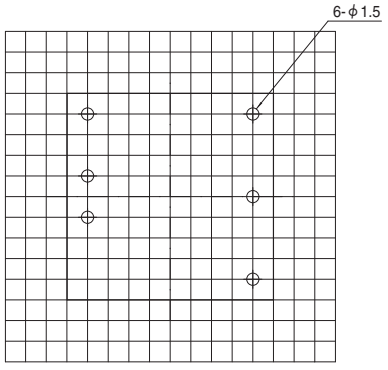

※Unit : 0.1inch
※Dimension : mm

※ Tolerance ±0.5 [±0.02]
※ Dimensions in mm, [ ]=inches
※ Pin terminal material : Copper
※ Plating treatment of terminal : Lead free plating
※ Case material : Brass
※ Plating treatment of case : Nickel plating
※ Bottom Cover : FR4 (t=0.6) [t=0.024]
※ Please keep enough creepage distance with the pattern on PCB and other components.
※ Weight 30g max

COSEL DC-DC Converters PCB Mount Type

MGFS80

Ordering information

MGF ① S ② 80 ③ 24 ④ 05 ⑤ -□ ⑥



①Series name
②Single output
③Output wattage
④Input voltage
⑤Output voltage
⑥Optional
G: Capacitor between Input and Output is removed.
R: with Remote ON/OFF (Positive logic control)

MODEL		MGFS80243R3	MGFS802405	MGFS802412	MGFS802415
MAX OUTPUT WATTAGE[W]		59.4	80	80.4	81
DC OUTPUT	VOLTAGE[V] *1	3.3	5	12	15
	CURRENT[A]	18	16	6.7	5.4

SPECIFICATIONS

	MODEL		MGFS80243R3	MGFS802405	MGFS802412	MGFS802415
INPUT	VOLTAGE[V]		DC9 - 36 (Surge Voltage 50V, 100ms max)			
	CURRENT[A]	*2	2.69typ	3.60typ	3.56typ	3.59typ
	EFFICIENCY[%]	*2	92typ	93typ	94typ	94typ
OUTPUT	VOLTAGE[V]		3.3	5	12	15
	CURRENT[A]		18	16	6.7	5.4
	LINE REGULATION[mV]		13.2max	20max	48max	60max
	LOAD REGULATION[mV]		20max	20max	48max	60max
	RIPPLE[mVp-p] *3	-20 to +60℃	75max	75max	100max	100max
		-40 to -20℃	100max	100max	120max	120max
		Io=0 to 10%	200max	200max	240max	240max
	RIPPLE NOISE[mVp-p] *3	-20 to +60℃	75max	75max	100max	100max
		-40 to -20℃	150max	150max	150max	150max
		Io=0 to 10%	250max	250max	270max	270max
	TEMPERATURE REGULATION[mV]	-20 to +60℃	50max	50max	150max	180max
		-40 to +60℃	80max	80max	240max	290max
	DRIFT[mV]	*4	20max	20max	48max	60max
	START-UP TIME[ms]		30max (Minimum input, Rated load)			
	OUTPUT VOLTAGE ADJUSTMENT RANGE		Fixed (TRM pin open) ±10% adjustable by external VR			
	OUTPUT VOLTAGE SETTING[V]	*5	3.296 - 3.404	4.975 - 5.137	11.857 - 12.243	14.839 - 15.321
PROTECTION CIRCUIT AND OTHERS	OVERCURRENT PROTECTION		Works over 105% of rating and recovers automatically			
	OVERVOLTAGE PROTECTION		Work over 115 to 140% of rating			
	REMOTE ON/OFF		Provided (Negative logic L:ON, H:OFF)			

MODEL		MGFS80483R3	MGFS804805	MGFS804812	MGFS804815
MAX OUTPUT WATTAGE[W]		59.4	80	80.4	81
DC OUTPUT	VOLTAGE[V] *1	3.3	5	12	15
	CURRENT[A]	18	16	6.7	5.4

SPECIFICATIONS

	MODEL		MGFS80483R3	MGFS804805	MGFS804812	MGFS804815
INPUT	VOLTAGE[V]		DC18 - 76 (Surge Voltage 100V, 100ms max)			
	CURRENT[A]	*2	1.35typ	1.80typ	1.78typ	1.80typ
	EFFICIENCY[%]	*2	92typ	93typ	94typ	94typ
OUTPUT	VOLTAGE[V]		3.3	5	12	15
	CURRENT[A]		18	16	6.7	5.4
	LINE REGULATION[mV]		13.2max	20max	48max	60max
	LOAD REGULATION[mV]		20max	20max	48max	60max
	RIPPLE[mVp-p] *3	-20 to +60℃	75max	75max	100max	100max
		-40 to -20℃	100max	100max	120max	120max
		Io=0 to 10%	200max	200max	240max	240max
	RIPPLE NOISE[mVp-p] *3	-20 to +60℃	75max	75max	100max	100max
		-40 to -20℃	150max	150max	150max	150max
		Io=0 to 10%	250max	250max	270max	270max
	TEMPERATURE REGULATION[mV]	-20 to +60℃	50max	50max	150max	180max
		-40 to +60℃	80max	80max	240max	290max
	DRIFT[mV]	*4	20max	20max	48max	60max
	START-UP TIME[ms]		30max (Minimum input, Rated load)			
	OUTPUT VOLTAGE ADJUSTMENT RANGE		Fixed (TRM pin open) ±10% adjustable by external VR			
	OUTPUT VOLTAGE SETTING[V]	*5	3.296 - 3.404	4.975 - 5.137	11.857 - 12.243	14.839 - 15.321
PROTECTION CIRCUIT AND OTHERS	OVERCURRENT PROTECTION		Works over 105% of rating and recovers automatically			
	OVERVOLTAGE PROTECTION		Work over 115 to 140% of rating			
	REMOTE ON/OFF		Provided (Negative logic L:ON, H:OFF)			

GENERAL SPECIFICATIONS

ISOLATION	INPUT-OUTPUT	DC1,500V 1minute, Cutoff current = 10mA, DC500V 1,000MΩ min (20±15℃)
	INPUT-CASE	DC1,000V 1minute, Cutoff current = 10mA, DC500V 1,000MΩ min (20±15℃)
	OUTPUT-CASE	DC1,000V 1minute, Cutoff current = 10mA, DC500V 1,000MΩ min (20±15℃)
ENVIRONMENT	OPERATING TEMP.,HUMID.AND ALTITUDE	-40 to +85℃, 20 to 95%RH (Non condensing) (Refer to "Derating"), 5,000m (16,400feet) max
	STORAGE TEMP.,HUMID.AND ALTITUDE	-40 to +100℃, 20 to 95%RH (Non condensing), 9,000m (30,000feet) max
	VIBRATION	10 - 55Hz, 98.0m/s² (10G), 3minutes period, 60minutes each along X, Y and Z axis
	IMPACT	490.3m/s² (50G), 11ms, once each along X, Y and Z axis
SAFETY	AGENCY APPROVALS	UL62368-1, C-UL(CSA62368-1), EN62368-1
OTHERS	CASE SIZE/WEIGHT	25.4×9.9×50.8mm (W×H×D) / 50g max
	COOLING METHOD	Convection/Forced air

*1 MGFW80xx12/MGFW80xx15 is available as single output +24V/+30V
*2 Rated input voltage (DC24V, DC48V) Io=100%
*3 Riple and Ripple Noise is measured by using test board with ceramic capacitor 22μF and Recommended Capacitance at 50mm from output pins. (20MHz Oscilloscope)
*4 Drift is the DC output accuracy for eight hour period after a half-hour warm-up at 25℃
*5 Rated input voltage (DC24V, DC48V), rated output wattage, ambient temperature at 25℃
* Parallel operation with other model is not possible.

External view

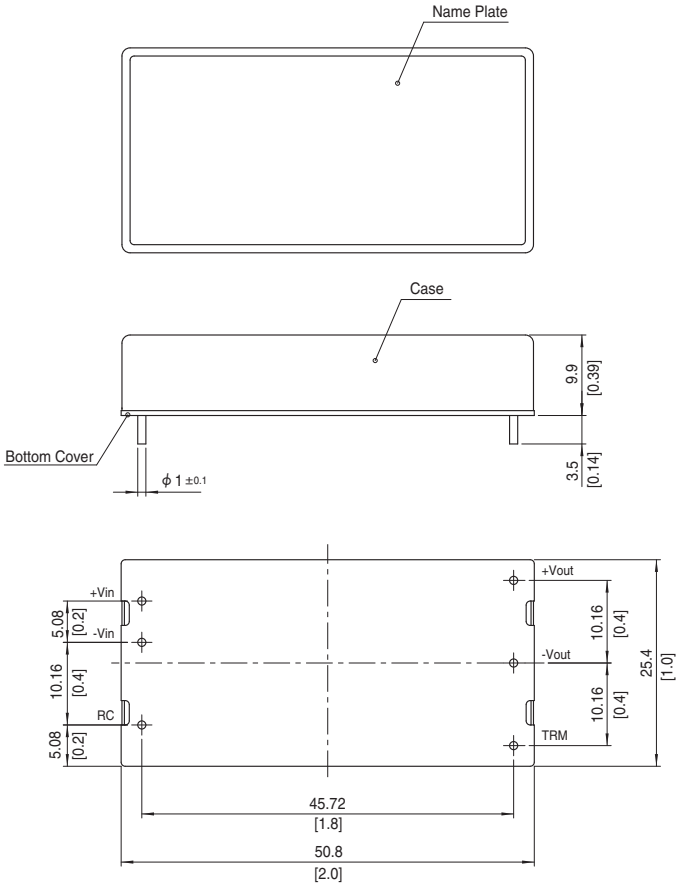

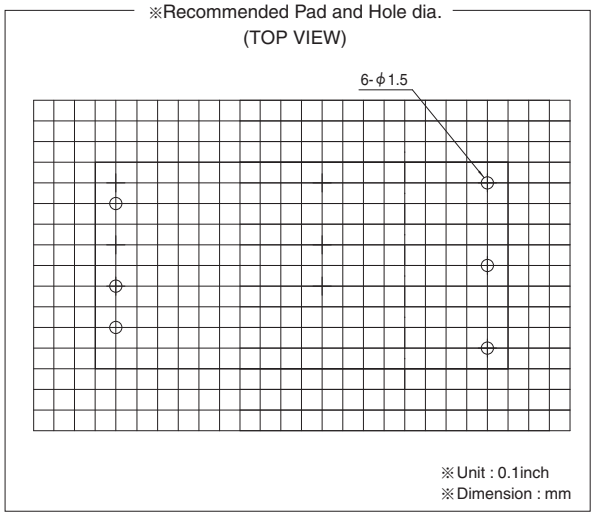

※ Tolerance ±0.5 [±0.02]
※ Dimensions in mm, [ ]=inches
※ Pin terminal material : Copper
※ Plating treatment of terminal : Lead free plating
※ Case material : Brass
※ Plating treatment of case : Nickel plating
※ Bottom Cover : FR4 (t=0.6) [t=0.024]
※ Please keep enough creepage distance with the pattern on PCB and other components.
※ Weight 50g max

COSEL DC-DC Converters PCB Mount Type

MGFW80

Ordering information

MGF	W	80	24	12	-□
①	②	③	④	⑤	⑧

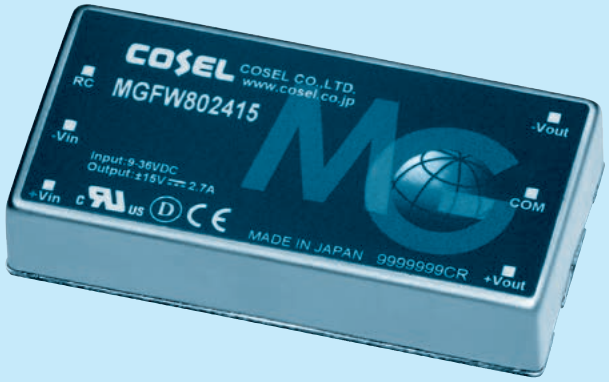

①Series name
②Dual output
③Output wattage
④Input voltage
⑤Output voltage
⑥Optional
G: Capacitor between Input and Output is removed.
R: with Remote ON/OFF (Positive logic control)

MODEL			MGFW802412	MGFW802415	MGFW804812	MGFW804815
MAX OUTPUT WATTAGE[W]			81.6	81	81.6	81
DC OUTPUT	VOLTAGE[V]	*1	±12 or +24	±15 or +30	±12 or +24	±15 or +30
	CURRENT[A]		3.4	2.7	3.4	2.7

SPECIFICATIONS

	MODEL		MGFW802412	MGFW802415	MGFW804812	MGFW804815
INPUT	VOLTAGE[V]		DC9 - 36 (Surge Voltage 50V, 100ms max)		DC18 - 76 (Surge Voltage 100V, 100ms max)	
	CURRENT[A]	*2	3.62typ	3.59typ	1.81typ	1.80typ
	EFFICIENCY[%]	*2	94typ	94typ	94typ	94typ
OUTPUT	VOLTAGE[V]		±12 or +24	±15 or +30	±12 or +24	±15 or +30
	CURRENT[A]		3.4	2.7	3.4	2.7
	LINE REGULATION[mV]		60max	75max	60max	75max
	LOAD REGULATION[mV]	*3	600max	750max	600max	750max
		*4	480max	600max	480max	600max
	RIPPLE[mVp-p] *5	-20 to +60℃	100max	100max	100max	100max
		-40 to -20℃	120max	120max	120max	120max
		Io=0 to 10%	240max	240max	240max	240max
	RIPPLE NOISE[mVp-p] *5	-20 to +60℃	100max	100max	100max	100max
		-40 to -20℃	150max	150max	150max	150max
		Io=0 to 10%	270max	270max	270max	270max
	TEMPERATURE REGULATION[mV]	-20 to +60℃	150max	180max	150max	180max
		-40 to +60℃	240max	290max	240max	290max
	DRIFT[mV]	*6	50max	60max	50max	60max
	START-UP TIME[ms]		30max (Minimum input, Rated load)			
	OUTPUT VOLTAGE SETTING[V]	*7	11.765 - 12.492	14.602 - 15.505	11.765 - 12.492	14.602 - 15.505
PROTECTION CIRCUIT AND OTHERS	OVERCURRENT PROTECTION		Works over 105% of rating and recovers automatically			
	OVERVOLTAGE PROTECTION		Work over 115 to 140% of rating (Total of +Vo and -Vo)			
	REMOTE ON/OFF		Provided (Negative logic L:ON, H:OFF)			
ISOLATION	INPUT-OUTPUT		DC1,500V 1minute, Cutoff current = 10mA, DC500V 1,000MΩ min (20±15℃)			
	INPUT-CASE		DC1,000V 1minute, Cutoff current = 10mA, DC500V 1,000MΩ min (20±15℃)			
	OUTPUT-CASE		DC1,000V 1minute, Cutoff current = 10mA, DC500V 1,000MΩ min (20±15℃)			
ENVIRONMENT	OPERATING TEMP.,HUMID.AND ALTITUDE		-40 to +85℃, 20 to 95%RH (Non condensing) (Refer to "Derating"), 5,000m (16,400feet) max			
	STORAGE TEMP.,HUMID.AND ALTITUDE		-40 to +100℃, 20 to 95%RH (Non condensing), 9,000m (30,000feet) max			
	VIBRATION		10 - 55Hz, 98.0m/s² (10G), 3minutes period, 60minutes each along X, Y and Z axis			
	IMPACT		490.3m/s² (50G), 11ms, once each along X, Y and Z axis			
SAFETY	AGENCY APPROVALS		UL62368-1, C-UL (CSA62368-1), EN62368-1			
OTHERS	CASE SIZE/WEIGHT		25.4×9.9×50.8mm (W×H×D) / 50g max			
	COOLING METHOD		Convection/Forced air			

*1 Single output +24V/+30V with no use of COM
*2 Rated input voltage(DC24V, DC48V) Io=100%
*3 Symmetrical loading from 0% to 100%
*4 Symmetrical loading from 20% to 100%
*5 Riple and Ripple Noise is measured by using test board with ceramic capacitor 22μF and Recommended Capacitance at 50mm from output pins. (20MHz Oscilloscope)
*6 Drift is the DC output accuracy for eight hour period after a half-hour warm-up at 25℃
*7 Rated input voltage (DC24V, DC48V), rated output wattage, ambient temperature at 25℃
* Parallel operation with other model is not possible.

External view

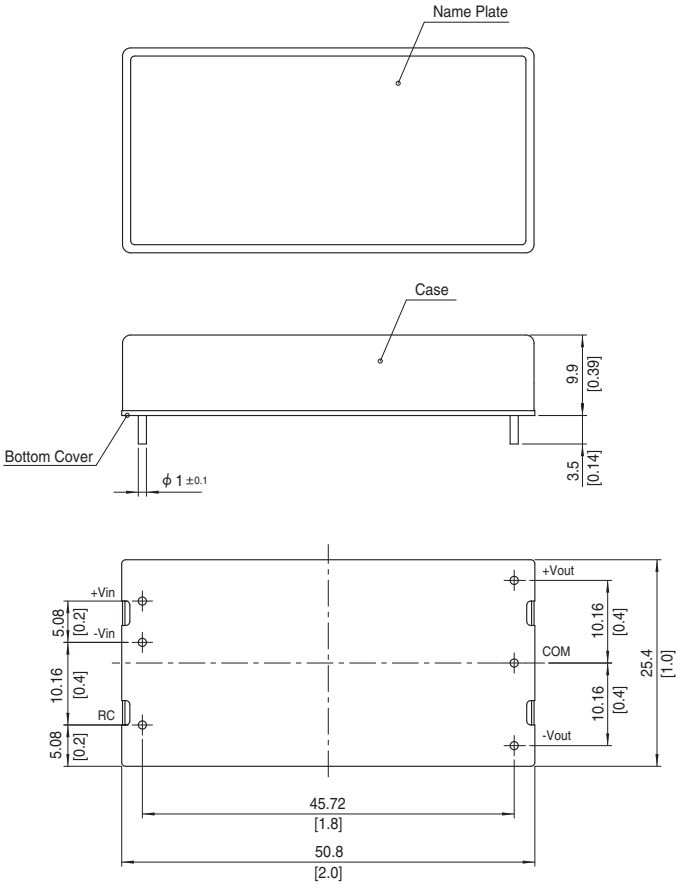

※Recommended Pad and Hole dia.
(TOP VIEW)

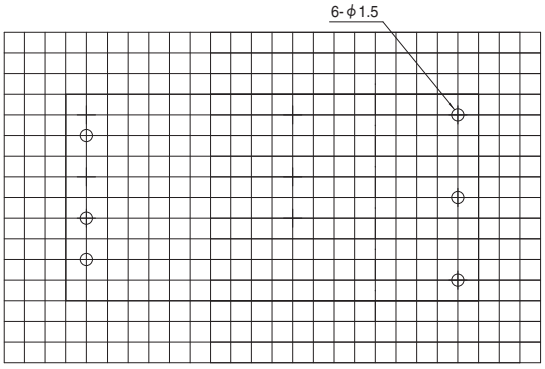

※Unit : 0.1inch
※Dimension : mm

※ Tolerance ±0.5 [±0.02]
※ Dimensions in mm, [ ]=inches
※ Pin terminal material : Copper
※ Plating treatment of terminal : Lead free plating
※ Case material : Brass
※ Plating treatment of case : Nickel plating
※ Bottom Cover : FR4 (t=0.6) [t=0.024]
※ Please keep enough creepage distance with the pattern on PCB and other components.
※ Weight 50g max

Pin configuration

●MG15/MG40 Single Output and Dual (±) Output

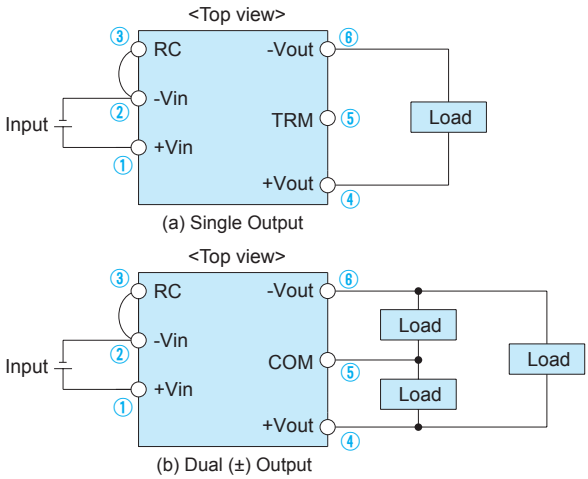

Pin No.	Pin Name	Function
①	+Vin	+DC Input
②	-Vin	-DC Input
③	RC	Remote ON/OFF
④	+Vout	+DC Output
⑤	TRM	Output Voltage Adjustment (Refer to instruction manual 1.5)
	COM	GND of Output Voltage (for Dual Output)
⑥	-Vout	-DC Output

●MG30/MG80 Single Output and Dual (±) Output

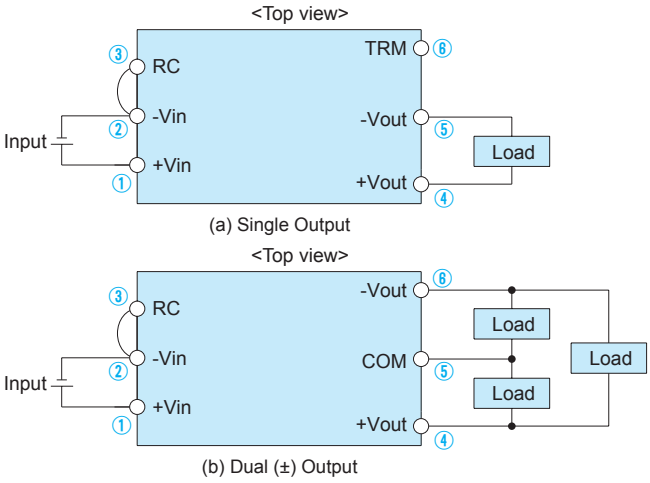

Pin No.	Pin Name	Function
①	+Vin	+DC Input
②	-Vin	-DC Input
③	RC	Remote ON/OFF
④	+Vout	+DC Output
⑤	-Vout	-DC Output (for Single Output)
	COM	GND of Output Voltage (for Dual Output)
⑥	TRM	Output Voltage Adjustment (Refer to instruction manual 1.5)
	-Vout	-DC Output (for Dual Output)

Assembling and Installation Method

Installation

■When two or more power supplies are used side by side, position them with proper intervals to allow enough air ventilation. Ambient temperature around each power supply should not exceed the temperature range shown in “Derating”.

Soldering Conditions

(1) Flow Soldering : 260℃ 15 seconds or less
(2) Soldering Iron : maximum 360℃ 5 seconds or less

Stress to Pin

■Applying excessive stress to the input or output pins of the power module may damage internal connections. Avoid applying stress in excess of that shown in right figure.
■Input/output pin are soldered to the PCB internally. Do not pull or bend a lead powerfully.

■If it is expected that stress is applied to the input/output pin due to vibration or impact, reduce the stress to the pin by taking such measures as fixing the unit to the PCB by silicone rubber, etc.
■Due to prevent failure, PS should not be pulled after soldering with PCB.

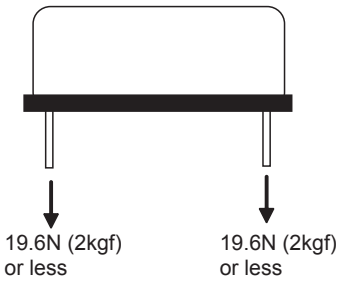

Derating

Derating curve for input voltage

●MGF□4005□

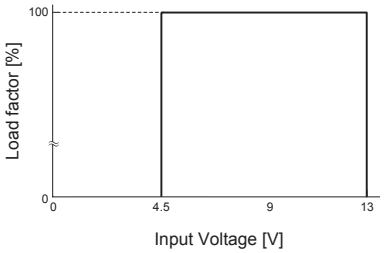

●MGF□4024□, MGF□4048□, MGF□8024□ and MGF□8048□

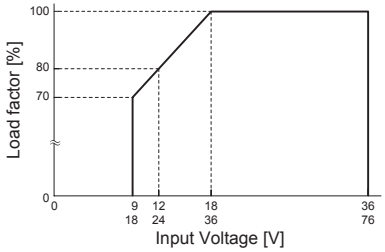

Ambient temperature derating curve

■It is necessary to note thermal fatigue life by power cycle. Please reduce the temperature fluctuation range as much as possible when the up and down of temperature are frequently generated.

■In case of forced air, ventilation must keep the temperature of point below the temperatures shown in Instruction Manual 7.

●MG15/MGF15 (Rated Input Voltage)

(1) In the case of Convection Cooling

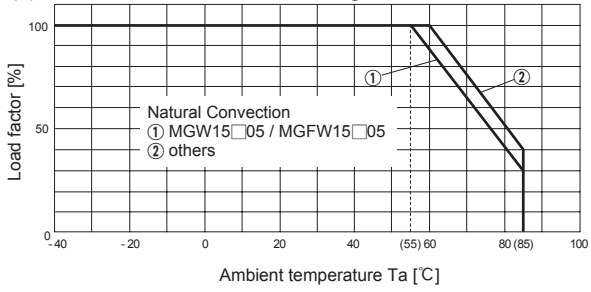

(2) In the case of Forced Air Cooling (1.0m/s)
(Excluding MGW15□05/MGFW15□05)

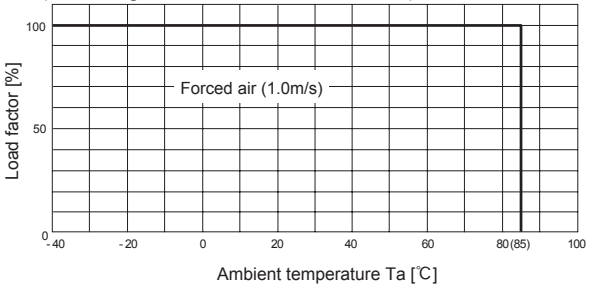

(3) In the case of Forced Air Cooling (1.0m/s, 2.5m/s)
(MGW15□05/MGFW15□05)

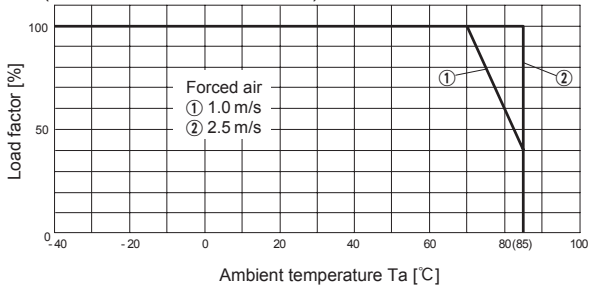

●MG30/MGF30 (Rated Input Voltage)

(1) In the case of Convection Cooling

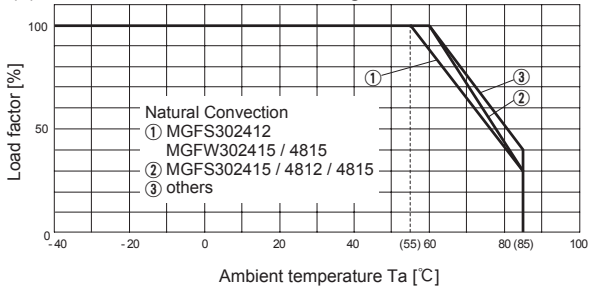

(2) In the case of Forced Air Cooling (1.0m/s)
(Excluding MGW30□05 and MGFW30□12/15)

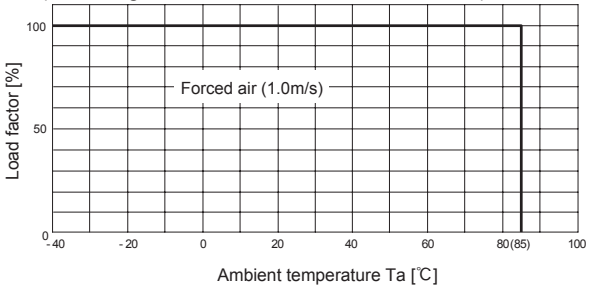

(3) In the case of Forced Air Cooling (1.0m/s, 1.5m/s)
(MGW30□05 and MGFW30□12/15)

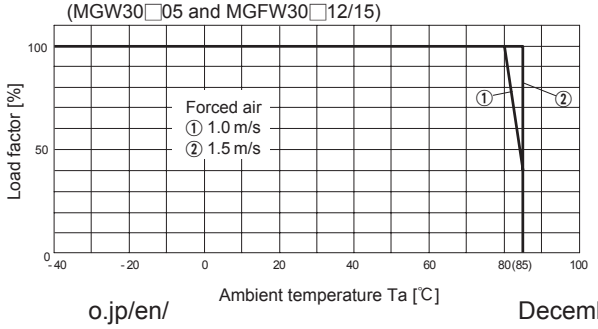

Derating

●MGF40 (Rated Input Voltage)

(1) In the case of Convection Cooling

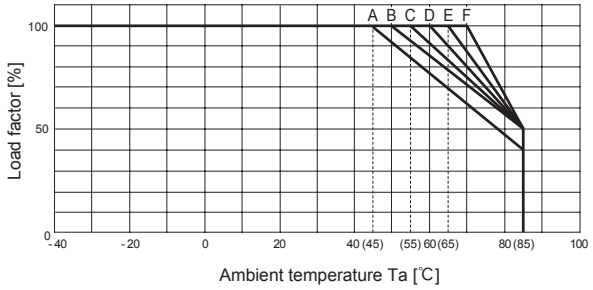

(2) In the case of Forced Air Cooling (1.0m/s)

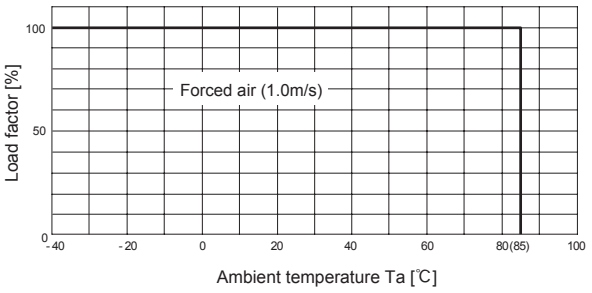

Input Voltage[V]	Output Voltage[V]					
	3.3	5	12	15	±12	±15
5	B	A	B	C	B	B
24	E	D	E	F	E	E
48	F	D	F	E	E	E

●MGF80 (Rated Input Voltage)

(1) In the case of Convection Cooling

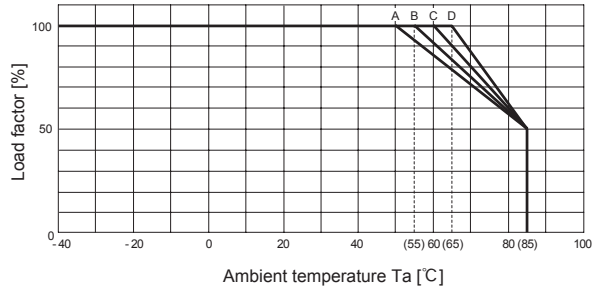

(2) In the case of Forced Air Cooling (1.0m/s)

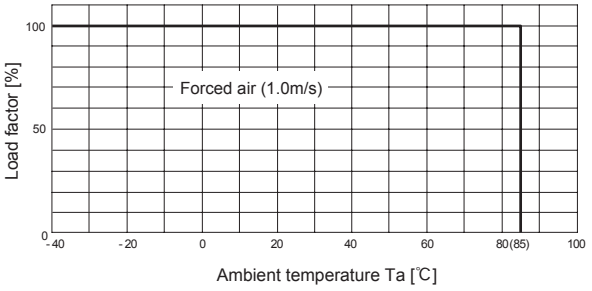

Input Voltage[V]	Output Voltage[V]					
	3.3	5	12	15	±12	±15
24	B	A	C	C	C	C
48	C	B	C	D	C	C

Instruction Manual

◆ It is neccessary to read the “Instruction Manual” and “Before using our product” before you use our product.

Instruction Manual	https://www.cosel.co.jp/redirect/catalog/en/MGS/
Instruction Manual	https://www.cosel.co.jp/redirect/catalog/en/MGW/
Instruction Manual	https://www.cosel.co.jp/redirect/catalog/en/MGFS/
Instruction Manual	https://www.cosel.co.jp/redirect/catalog/en/MGFW/
Before using our product	https://en.cosel.co.jp/technical/caution/index.html

MGS MGW MGFS MGFW NOTICE

Basic Characteristics Data

Model	Circuit method	Switching frequency [kHz] (reference)	Input current [A]	Inrush current protection	PCB/Pattern			Series/Parallel operation availability	
					Material	Single sided	Double sided	Series operation	Parallel operation
MG15	Flyback converter	445-495	∗1	-	glass fabric base,epoxy resin		Yes	Yes	∗2
MGF15	Flyback converter	445-495	∗1	-	glass fabric base,epoxy resin		Yes	Yes	∗2
MG30	Forward converter	380-460	∗1	-	glass fabric base,epoxy resin		Yes	Yes	∗2
MGF30	Forward converter	380-460	∗1	-	glass fabric base,epoxy resin		Yes	Yes	∗2
MGF40	Flyback converter	100-1500 ∗3	∗1	-	glass fabric base,epoxy resin		Yes	Yes	∗2
MGF80	Flyback converter	100-1500 ∗3	∗1	-	glass fabric base,epoxy resin		Yes	Yes	∗2

∗1 Refer to Specification.
∗2 Refer to Instruction Manual.
∗3 The value changes depending on input and load.