DC-DC Converters PCB Mount Type

Isolated | Safety Approvals | OCP | Remote ON/OFF | Wide 4 :1 input | Medical electric equipment

MH-series

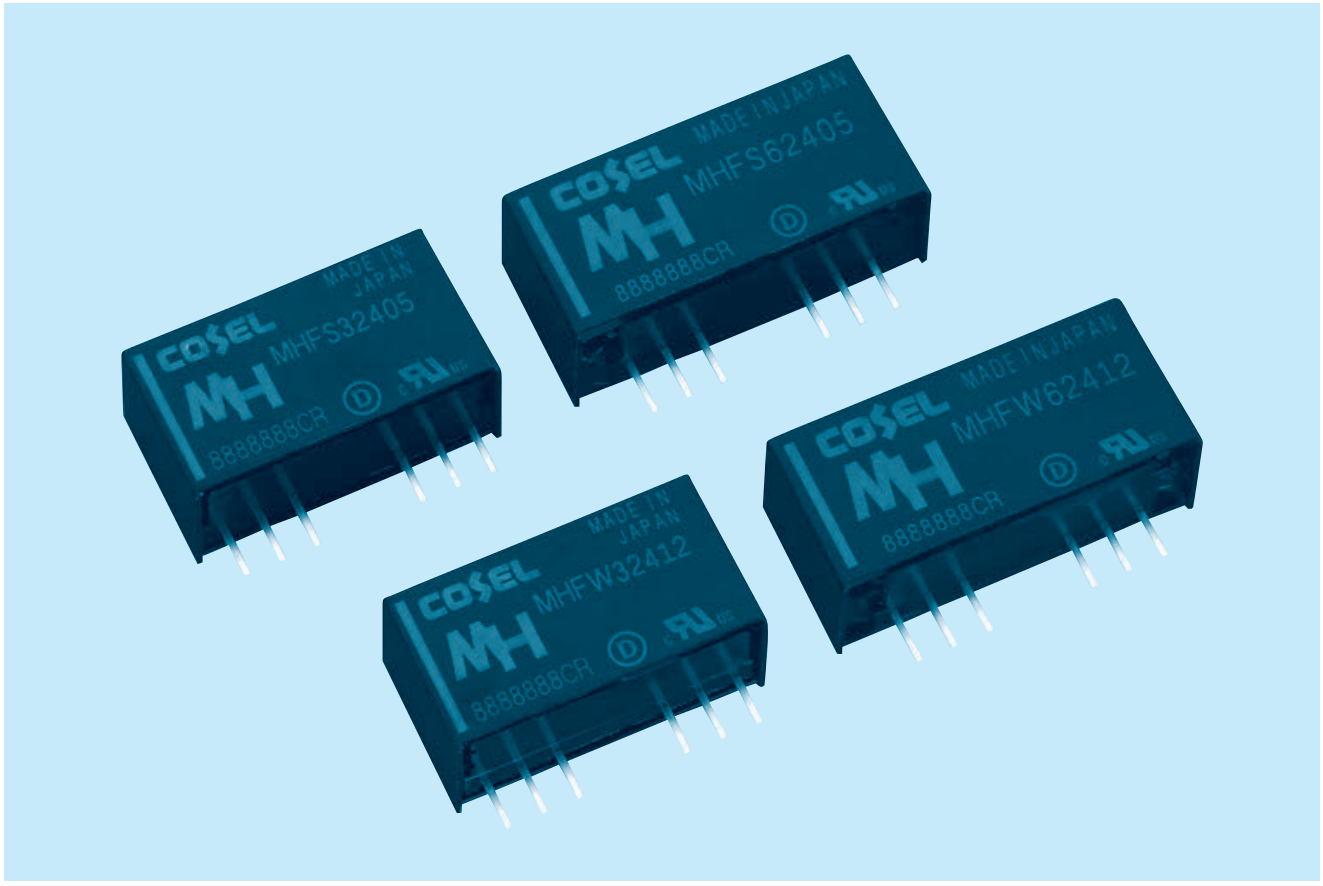

Feature

Industry Standard SIP8
Wide input range DC4.5-18V/DC9-36V//DC18-76V
I/O isolation voltage AC3,000V (1 minute), DC4,200V (1 minute)
Built-in overcurrent protection circuits (recovers automatically)
Built-in remote ON/OFF
Output voltage adjustability by external variable resistor (MHFS3/MHFS6)
For medical electric equipment (ANSI/AAMI ES60601-1, EN60601-1 3rd)
Medical Isolation Grade 2MOOP
High reliability : not built-in aluminum and tantalum electrolytic capacitor

CE marking

Low voltage Directive
RoHS Directive

Safety agency approvals

UL62368-1, EN62368-1, C-UL (equivalent to CAN/CSA-C22.2 No.62368-1),
ANSI/AAMI ES60601-1, EN60601-1 3rd, C-UL (equivalent to CAN/CSA-C22.2 No.60601-1)

5-years warranty

COSEL DC-DC Converters PCB Mount Type

MHFS3

Ordering information

MHF	S	3	24	05
①	②	③	④	⑤

①Series name
②Single output
③Output wattage
④Input voltage
⑤Output voltage

RoHS

2M00P

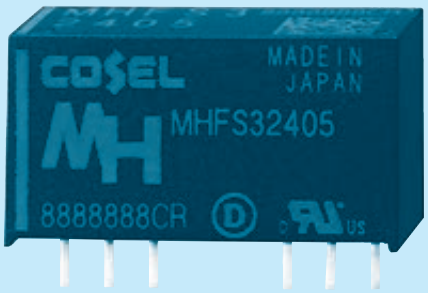

*If TRM pin does not open, the output voltage can not be adjusted.

MODEL		MHFS3123R3	MHFS31205	MHFS31209	MHFS31212	MHFS31215	MHFS3243R3	MHFS32405	MHFS32409	MHFS32412	MHFS32415
MAX OUTPUT WATTAGE[W]		2.64	3.00	2.97	3.00	3.00	2.64	3.00	2.97	3.00	3.00
DC OUTPUT	VOLTAGE[V]	3.3	5	9	12	15	3.3	5	9	12	15
	CURRENT[A]	0.8	0.6	0.33	0.25	0.2	0.8	0.6	0.33	0.25	0.2

SPECIFICATIONS

	MODEL		MHFS3123R3	MHFS31205	MHFS31209	MHFS31212	MHFS31215	MHFS3243R3	MHFS32405	MHFS32409	MHFS32412	MHFS32415
INPUT	VOLTAGE[VDC]		4.5 - 18 (Surge voltage 25V, 100ms max)					9 - 36 (Surge voltage 50V, 100ms max)				
	CURRENT[A]	*1	0.29typ	0.32typ	0.31typ	0.31typ	0.31typ	0.15typ	0.16typ	0.16typ	0.16typ	0.16typ
	EFFICIENCY[%]	*1	77typ	79typ	81typ	82typ	81.5typ	77.5typ	79typ	81.5typ	82typ	81typ
OUTPUT	VOLTAGE[V]		3.3	5	9	12	15	3.3	5	9	12	15
	CURRENT[A]		0.8	0.6	0.33	0.25	0.2	0.8	0.6	0.33	0.25	0.2
	LINE REGULATION[mV]		20max	20max	40max	48max	60max	20max	20max	40max	48max	60max
	LOAD REGULATION[mV]		20max	20max	40max	48max	60max	20max	20max	40max	48max	60max
	RIPPLE[mVp-p]	*2	120max	120max	150max	150max	150max	120max	120max	150max	150max	150max
	RIPPLE NOISE[mVp-p]	*2	200max	200max	200max	200max	200max	200max	200max	200max	200max	200max
	TEMPERATURE REGULATION[mV]	-20 to +70℃	50max	50max	100max	150max	180max	50max	50max	100max	150max	180max
		-40 to +70℃	80max	80max	160max	240max	290max	80max	80max	160max	240max	290max
	DRIFT[mV]	*3	20max	20max	40max	48max	60max	20max	20max	40max	48max	60max
	START-UP TIME[ms]		30max (Rated input, Io=100%)									
	OUTPUT VOLTAGE ADJUSTMENT RANGE		Fixed (TRM pin open) Available to adjust by external variable resister									
			-5%/+10%	-5%/+20%	-5%/+20%	-5%/+20%	-5%/+20%	-5%/+10%	-5%/+20%	-5%/+20%	-5%/+20%	-5%/+20%
	OUTPUT VOLTAGE SETTING[V]		3.21 - 3.42	4.90 - 5.21	8.73 - 9.27	11.64 - 12.36	14.55 - 15.45	3.21 - 3.42	4.90 - 5.21	8.73 - 9.27	11.64 - 12.36	14.55 - 15.45
PROTECTION CIRCUIT AND OTHERS	OVERCURRENT PROTECTION		Works over 105% of rating and recovers automatically									
	REMOTE ON/OFF		Provided (Negative logic L:ON, H:OFF)									

MODEL		MHFS3483R3	MHFS34805	MHFS34809	MHFS34812	MHFS34815
MAX OUTPUT WATTAGE[W]		2.64	3.00	2.97	3.00	3.00
DC OUTPUT	VOLTAGE[V]	3.3	5	9	12	15
	CURRENT[A]	0.8	0.6	0.33	0.25	0.2

SPECIFICATIONS

	MODEL		MHFS3483R3	MHFS34805	MHFS34809	MHFS34812	MHFS34815
INPUT	VOLTAGE[VDC]		18 - 76 (Surge voltage 100V, 100ms max)				
	CURRENT[A]	*1	0.072typ	0.080typ	0.076typ	0.076typ	0.077typ
	EFFICIENCY[%]	*1	77typ	79typ	82typ	82.5typ	81.5typ
OUTPUT	VOLTAGE[V]		3.3	5	9	12	15
	CURRENT[A]		0.8	0.6	0.33	0.25	0.2
	LINE REGULATION[mV]		20max	20max	40max	48max	60max
	LOAD REGULATION[mV]		20max	20max	40max	48max	60max
	RIPPLE[mVp-p]	*2	120max	120max	150max	150max	150max
	RIPPLE NOISE[mVp-p]	*2	200max	200max	200max	200max	200max
	TEMPERATURE REGULATION[mV]	-20 to +70℃	50max	50max	100max	150max	180max
		-40 to +70℃	80max	80max	160max	240max	290max
	DRIFT[mV]	*3	20max	20max	40max	48max	60max
	START-UP TIME[ms]		30max (Rated input, Io=100%)				
	OUTPUT VOLTAGE ADJUSTMENT RANGE		Fixed (TRM pin open) Available to adjust by external variable resister				
			-5%/+10%	-5%/+20%	-5%/+20%	-5%/+20%	-5%/+20%
	OUTPUT VOLTAGE SETTING[V]		3.21 - 3.42	4.90 - 5.21	8.73 - 9.27	11.64 - 12.36	14.55 - 15.45
PROTECTION CIRCUIT AND OTHERS	OVERCURRENT PROTECTION		Works over 105% of rating and recovers automatically				
	REMOTE ON/OFF		Provided (Negative logic L:ON, H:OFF)				

GENERAL SPECIFICATIONS

ISOLATION	INPUT-OUTPUT	AC3,000V 1minute Cutoff current=1mA, DC4,200V 1minute Cutoff current=1mA, DC500V 1,000MΩ (20±15℃) 2MOOP (250VAC, 3,000m max)
ISOLATION CAPACITANCE	INPUT-OUTPUT	20pF max
ENVIRONMENT	OPERATING TEMP.,HUMID.AND ALTITUDE	-40 to +85℃, 20 to 95%RH (Non condensing) (Refer to Derating)
	STORAGE TEMP.,HUMID.AND ALTITUDE	-40 to +100℃, 20 to 95%RH (Non condensing)
	VIBRATION	10 - 55Hz 98.0m/s² (10G), 3minutes period, 60minutes each along X, Y and Z axis
	IMPACT	490.3m/s² (50G) 11ms, once each along X, Y and Z axis
SAFETY	AGENCY APPROVALS	UL62368-1, EN62368-1, C-UL (equivalent to CAN/CSA-C22.2 No.62368-1), ANSI/AAMI ES60601-1, EN60601-1 3rd, C-UL (equivalent to CAN/CSA-C22.2 No.60601-1)
OTHERS	CASE SIZE/WEIGHT	22.0×12.0×9.5mm [0.87×0.48×0.38 inches] (W×H×D) / 7g max
	COOLING METHOD	Convection/Forced air

*1 Rated input 12V, 24V or 48V DC Io=100%
*2 Ripple and ripple noise is measured by using test board with ceramic capacitor 0.1μF at 50mm from output pins.
*3 Drift is the DC output accuracy for eight hours period after a half-hour warm-up at 25℃.
* Parallel operation is not possible.
* MHFW3xx12/MHFW3xx15 is available as single output, +24V/+30V

External view

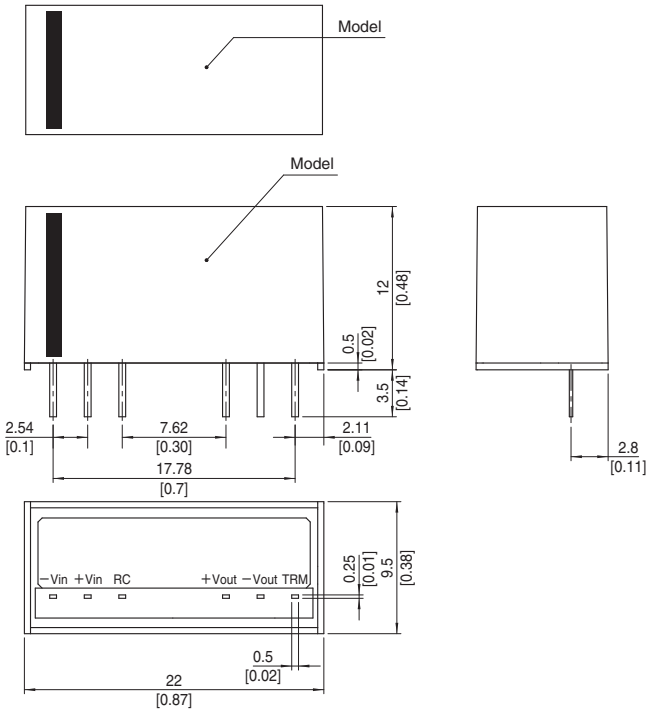

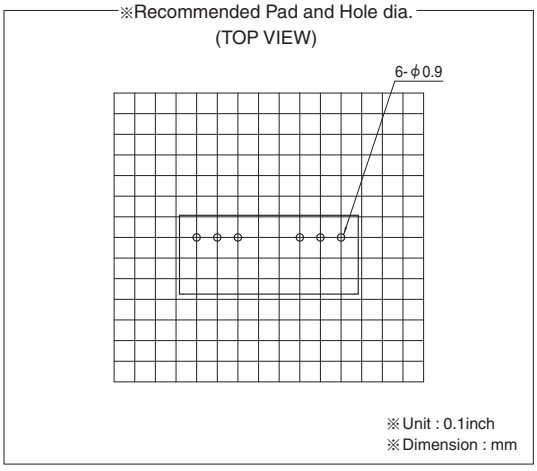

※ Tolerance ±0.5 [±0.02]
※ Dimensions in mm, [ ]= inches
※ Pin terminal material : Copper
※ Planting treatment of terminal : Lead free plating
※ Case material : PBT
※ Weight 7g max

COSEL DC-DC Converters PCB Mount Type

MHFW3

Ordering information

MHF	W	3	24	12
①	②	③	④	⑤

①Series name
②Dual output
③Output wattage
④Input voltage
⑤Output voltage

RoHS

2M00P

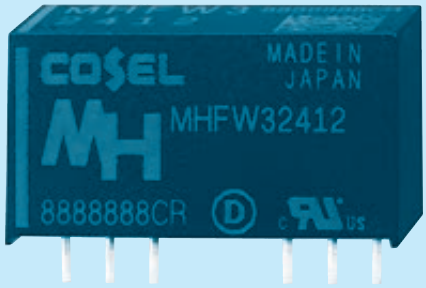

MODEL			MHFW31212	MHFW31215	MHFW32412	MHFW32415	MHFW34812	MHFW34815
MAX OUTPUT WATTAGE[W]			3.12	3.00	3.12	3.00	3.12	3.00
DC OUTPUT	VOLTAGE[V]	*1	±12 or +24	±15 or +30	±12 or +24	±15 or +30	±12 or +24	±15 or +30
	CURRENT[A]		0.13	0.1	0.13	0.1	0.13	0.1

SPECIFICATIONS

	MODEL		MHFW31212	MHFW31215	MHFW32412	MHFW32415	MHFW34812	MHFW34815
INPUT	VOLTAGE[VDC]		4.5 - 18 (Surge voltage 25V, 100ms max)		9 - 36 (Surge voltage 50V, 100ms max)		18 - 76 (Surge voltage 100V, 100ms max)	
	CURRENT[A]	*2	0.32typ	0.31typ	0.16typ	0.16typ	0.081typ	0.079typ
	EFFICIENCY[%]	*2	80.5typ	80typ	80typ	79typ	81typ	80typ
OUTPUT	VOLTAGE[V]		±12 (+24)	±15 (+30)	±12 (+24)	±15 (+30)	±12 (+24)	±15 (+30)
	CURRENT[A]		0.13	0.1	0.13	0.1	0.13	0.1
	LINE REGULATION[mV]		60max	75max	60max	75max	60max	75max
	CROSS REGULATION[mV]	*3	480max	600max	480max	600max	480max	600max
		*4	600max	750max	600max	750max	600max	750max
	RIPPLE[mVp-p]	*5	180max	180max	180max	180max	180max	180max
	RIPPLE NOISE[mVp-p]	*5	210max	210max	210max	210max	210max	210max
	TEMPERATURE REGULATION[mV]	-20 to +70℃	180max	220max	180max	220max	180max	220max
		-40 to +70℃	290max	340max	290max	340max	290max	340max
	DRIFT[mV]	*6	48max	60max	48max	60max	48max	60max
	START-UP TIME[ms]		30max (Rated input, Io=100%)					
	OUTPUT VOLTAGE SETTING[V]		11.64 - 12.36	14.55 - 15.45	11.64 - 12.36	14.55 - 15.45	11.64 - 12.36	14.55 - 15.45
PROTECTION CIRCUIT AND OTHERS	OVERCURRENT PROTECTION		Works over 105% of rating and recovers automatically					
	REMOTE ON/OFF		Provided (Negative logic L:ON, H:OFF)					

GENERAL SPECIFICATIONS

ISOLATION	INPUT-OUTPUT	AC3,000V 1minute Cutoff current=1mA, DC4,200V 1minute Cutoff current=1mA, DC500V 1,000MΩ (20±15℃) 2MOOP (250VAC, 3,000m max)
ISOLATION CAPACITANCE	INPUT-OUTPUT	20pF max
ENVIRONMENT	OPERATING TEMP.,HUMID.AND ALTITUDE	-40 to +85℃, 20 to 95%RH (Non condensing) (Refer to Derating)
	STORAGE TEMP.,HUMID.AND ALTITUDE	-40 to +100℃, 20 to 95%RH (Non condensing)
	VIBRATION	10 - 55Hz 98.0m/s² (10G), 3minutes period, 60minutes each along X, Y and Z axis
	IMPACT	490.3m/s² (50G) 11ms, once each along X, Y and Z axis
SAFETY	AGENCY APPROVALS	UL62368-1, EN62368-1, C-UL (equivalent to CAN/CSA-C22.2 No.62368-1), ANSI/AAMI ES60601-1, EN60601-1 3rd, C-UL (equivalent to CAN/CSA-C22.2 No.60601-1)
OTHERS	CASE SIZE/WEIGHT	22.0×12.0×9.5mm [0.87×0.48×0.38 inches] (W×H×D) / 7g max
	COOLING METHOD	Convection/Forced air

*1 Single output +24V, +30V with no use of COM.
*2 Rated input 12V or 24V or 48V DC Io=100%
*3 Symmetrical loading from 20% to 100%.
*4 Symmetrical loading from 0% to 100%.
*5 Ripple and ripple noise is measured by using test board with ceramic capacitor 0.1μF at 50mm from output pins.
*6 Drift is the DC output accuracy for eight hours period after a half-hour warm-up at 25℃.
* Parallel operation is not possible.

External view

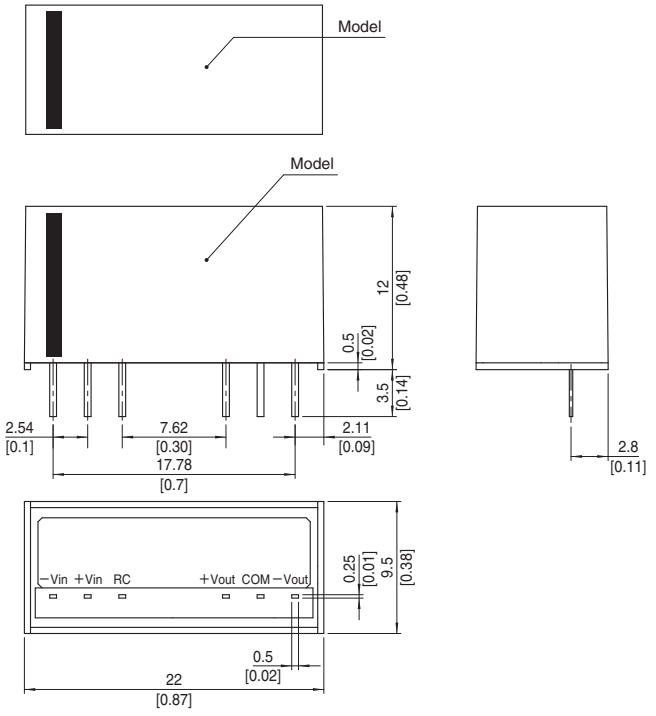

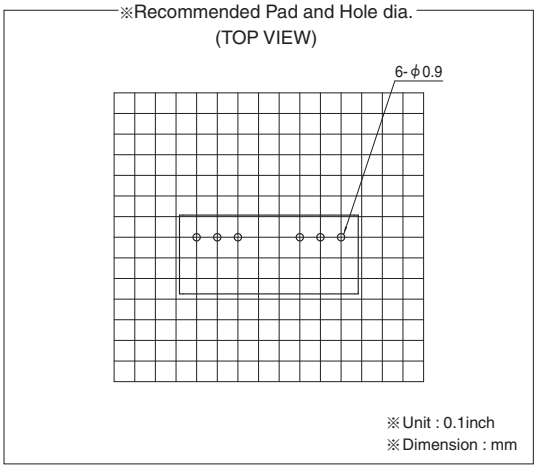

※ Tolerance ±0.5 [±0.02]
※ Dimensions in mm, [ ]= inches
※ Pin terminal material : Copper
※ Planting treatment of terminal : Lead free plating
※ Case material : PBT
※ Weight 7g max

COSEL DC-DC Converters PCB Mount Type

MHFS6

Ordering information

MHF	S	6	24	05
①	②	③	④	⑤

①Series name
②Single output
③Output wattage
④Input voltage
⑤Output voltage

RoHS

2M00P

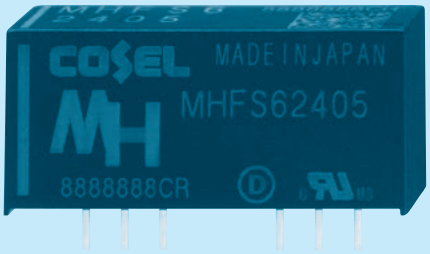

*If TRM pin does not open, the output voltage can not be adjusted.

MODEL		MHFS6123R3	MHFS61205	MHFS61209	MHFS61212	MHFS61215	MHFS6243R3	MHFS62405	MHFS62409	MHFS62412	MHFS62415
MAX OUTPUT WATTAGE[W]		5.28	6.00	5.94	6.00	6.00	5.28	6.00	5.94	6.00	6.00
DC OUTPUT	VOLTAGE[V]	3.3	5	9	12	15	3.3	5	9	12	15
	CURRENT[A]	1.6	1.2	0.66	0.5	0.4	1.6	1.2	0.66	0.5	0.4

SPECIFICATIONS

	MODEL		MHFS6123R3	MHFS61205	MHFS61209	MHFS61212	MHFS61215	MHFS6243R3	MHFS62405	MHFS62409	MHFS62412	MHFS62415
INPUT	VOLTAGE[VDC]		4.5 - 18 (Surge voltage 25V, 100ms max) (Refer to Derating for 5V and below)					9 - 36 (Surge voltage 50V, 100ms max) (Refer to Derating for 12V and below)				
	CURRENT[A]	*1	0.57typ	0.61typ	0.59typ	0.60typ	0.60typ	0.28typ	0.31typ	0.30typ	0.30typ	0.31typ
	EFFICIENCY[%]	*1	78typ	82typ	84typ	84typ	84typ	79typ	83typ	84typ	84typ	83typ
OUTPUT	VOLTAGE[V]		3.3	5	9	12	15	3.3	5	9	12	15
	CURRENT[A]		1.6	1.2	0.66	0.5	0.4	1.6	1.2	0.66	0.5	0.4
	LINE REGULATION[mV]		20max	20max	40max	48max	60max	20max	20max	40max	48max	60max
	LOAD REGULATION[mV]		20max	20max	40max	48max	60max	20max	20max	40max	48max	60max
	RIPPLE[mVp-p]	*3	75max	75max	100max	100max	100max	75max	75max	100max	100max	100max
		*2 *4	225max	225max	300max	300max	300max	225max	225max	300max	300max	300max
	RIPPLE NOISE[mVp-p]	*3	120max	120max	150max	150max	150max	120max	120max	150max	150max	150max
		*2 *4	300max	300max	400max	400max	400max	300max	300max	400max	400max	400max
	TEMPERATURE REGULATION[mV]	-20 to +50℃	50max	50max	100max	150max	180max	50max	50max	100max	150max	180max
		-40 to +50℃	80max	80max	160max	240max	290max	80max	80max	160max	240max	290max
	DRIFT[mV]	*5	20max	20max	40max	48max	60max	20max	20max	40max	48max	60max
	START-UP TIME[ms]		30max (Rated input, Io=100%)									
	OUTPUT VOLTAGE ADJUSTMENT RANGE		Fixed (TRM pin open) Available to adjust by external variable resister									
			-5%/+10%	-5%/+20%	-5%/+20%	-5%/+20%	-5%/+20%	-5%/+10%	-5%/+20%	-5%/+20%	-5%/+20%	-5%/+20%
	OUTPUT VOLTAGE SETTING[V]		3.21 - 3.42	4.90 - 5.21	8.73 - 9.27	11.64 - 12.36	14.55 - 15.45	3.21 - 3.42	4.90 - 5.21	8.73 - 9.27	11.64 - 12.36	14.55 - 15.45
PROTECTION CIRCUIT AND OTHERS	OVERCURRENT PROTECTION		Works over 105% of rating and recovers automatically									
	REMOTE ON/OFF		Provided (Negative logic L:ON, H:OFF)									

MODEL		MHFS6483R3	MHFS64805	MHFS64809	MHFS64812	MHFS64815
MAX OUTPUT WATTAGE[W]		5.28	6.00	5.94	6.00	6.00
DC OUTPUT	VOLTAGE[V]	3.3	5	9	12	15
	CURRENT[A]	1.6	1.2	0.66	0.5	0.4

SPECIFICATIONS

	MODEL		MHFS6483R3	MHFS64805	MHFS64809	MHFS64812	MHFS64815
INPUT	VOLTAGE[VDC]		18 - 76 (Surge voltage 100V, 100ms max) (Refer to Derating for 24V and below)				
	CURRENT[A]	*1	0.142typ	0.153typ	0.148typ	0.149typ	0.149typ
	EFFICIENCY[%]	*1	78typ	82typ	84typ	84typ	84typ
OUTPUT	VOLTAGE[V]		3.3	5	9	12	15
	CURRENT[A]		1.6	1.2	0.66	0.5	0.4
	LINE REGULATION[mV]		20max	20max	40max	48max	60max
	LOAD REGULATION[mV]		20max	20max	40max	48max	60max
	RIPPLE[mVp-p]	*3	75max	75max	100max	100max	100max
		*2 *4	225max	225max	300max	300max	300max
	RIPPLE NOISE[mVp-p]	*3	120max	120max	150max	150max	150max
		*2 *4	300max	300max	400max	400max	400max
	TEMPERATURE REGULATION[mV]	-20 to +50℃	50max	50max	100max	150max	180max
		-40 to +50℃	80max	80max	160max	240max	290max
	DRIFT[mV]	*5	20max	20max	40max	48max	60max
	START-UP TIME[ms]		30max (Rated input, Io=100%)				
	OUTPUT VOLTAGE ADJUSTMENT RANGE		Fixed (TRM pin open) Available to adjust by external variable resister				
			-5%/+10%	-5%/+20%	-5%/+20%	-5%/+20%	-5%/+20%
	OUTPUT VOLTAGE SETTING[V]		3.21 - 3.42	4.90 - 5.21	8.73 - 9.27	11.64 - 12.36	14.55 - 15.45
PROTECTION CIRCUIT AND OTHERS	OVERCURRENT PROTECTION		Works over 105% of rating and recovers automatically				
	REMOTE ON/OFF		Provided (Negative logic L:ON, H:OFF)				

GENERAL SPECIFICATIONS

ISOLATION	INPUT-OUTPUT	AC3,000V 1minute Cutoff current=1mA, DC4,200V 1minute Cutoff current=1mA, DC500V 1,000MΩ (20±15℃) 2MOOP (250VAC, 3,000m max)
ISOLATION CAPACITANCE	INPUT-OUTPUT	20pF max
ENVIRONMENT	OPERATING TEMP.,HUMID.AND ALTITUDE	-40 to +85℃, 20 to 95%RH (Non condensing) (Refer to Derating)
	STORAGE TEMP.,HUMID.AND ALTITUDE	-40 to +100℃, 20 to 95%RH (Non condensing)
	VIBRATION	10 - 55Hz 98.0m/s² (10G), 3minutes period, 60minutes each along X, Y and Z axis
	IMPACT	490.3m/s² (50G) 11ms, once each along X, Y and Z axis
SAFETY	AGENCY APPROVALS	UL62368-1, EN62368-1, C-UL (equivalent to CAN/CSA-C22.2 No.62368-1), ANSI/AAMI ES60601-1, EN60601-1 3rd, C-UL (equivalent to CAN/CSA-C22.2 No.60601-1)
OTHERS	CASE SIZE/WEIGHT	26.0×12.0×9.5mm [1.03×0.48×0.38 inches] (W×H×D) / 8g max
	COOLING METHOD	Convection/Forced air

*1 Rated input 12V, 24V or 48V DC Io=100%
*2 Ripple and ripple noise is measured by using test board with ceramic capacitor 0.1μF at 50mm from output pins.
*3 At Vin=4.5 - 16V (MHFS612xx), Vin=9 - 30V (MHFS624xx), Vin=18 - 60V (MHFS648xx) / Io=30 - 100%.
*4 At Vin=4.5 - 16V (MHFS612xx), Vin=9 - 30V (MHFS624xx), Vin=18 - 60V (MHFS648xx) / Io=0 - 30%.
At Vin=16 - 18V (MHFS612xx), Vin=30 - 36V (MHFS624xx), Vin=60 - 76V (MHFS648xx) / Io=0 - 100%.
*5 Drift is the DC output accuracy for eight hours period after a half-hour warm-up at 25℃.
* Parallel operation is not possible.
* MHFW6xx12/MHFW6xx15 is available as single output, +24V/+30V.

External view

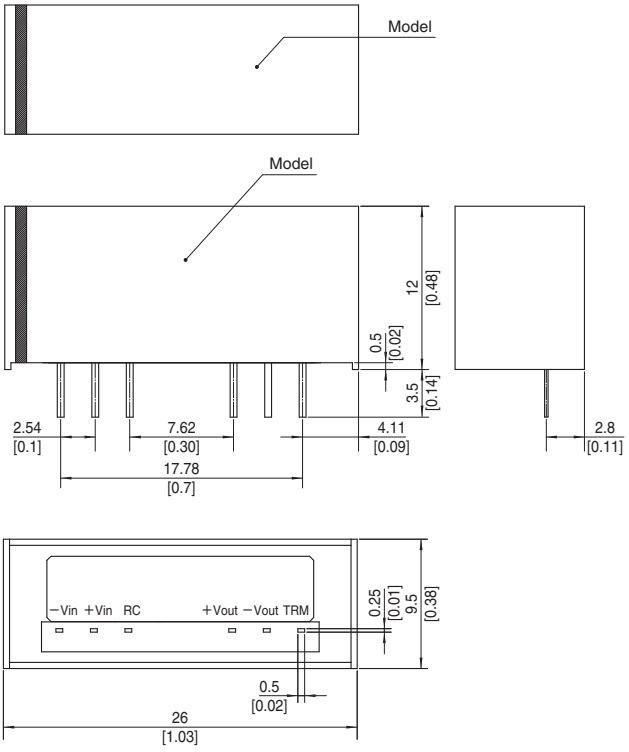

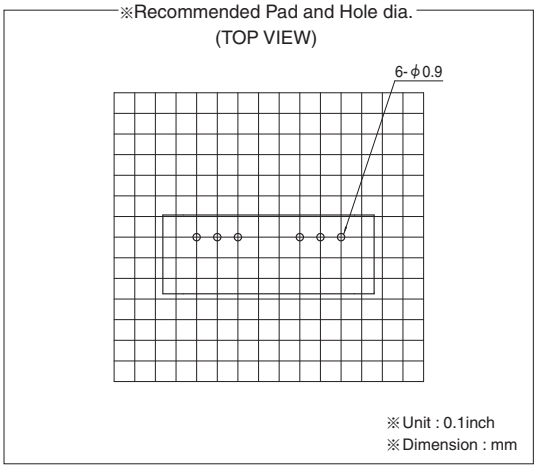

※ Tolerance ±0.5 [±0.02]
※ Dimensions in mm, [ ]= inches
※ Pin terminal material : Copper
※ Planting treatment of terminal : Lead free plating
※ Case material : PBT
※ Weight 8g max

COSEL DC-DC Converters PCB Mount Type

MHFW6

Ordering information

MHF	W	6	24	12
①	②	③	④	⑤

①Series name
②Dual output
③Output wattage
④Input voltage
⑤Output voltage

RoHS

2MOOP

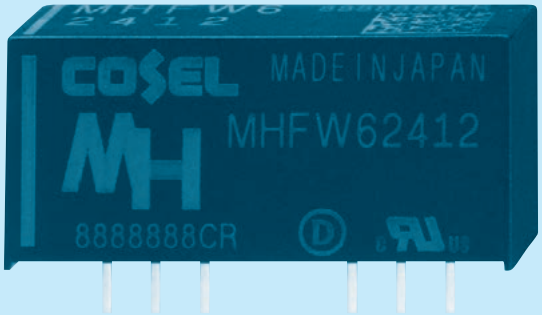

MODEL			MHFW61212	MHFW61215	MHFW62412	MHFW62415	MHFW64812	MHFW64815
MAX OUTPUT WATTAGE[W]			6.00	6.00	6.00	6.00	6.00	6.00
DC OUTPUT	VOLTAGE[V]	*1	±12 or +24	±15 or +30	±12 or +24	±15 or +30	±12 or +24	±15 or +30
	CURRENT[A]		0.25	0.2	0.25	0.2	0.25	0.2

SPECIFICATIONS

	MODEL		MHFW61212	MHFW61215	MHFW62412	MHFW62415	MHFW64812	MHFW64815
INPUT	VOLTAGE[VDC]		4.5 - 18 (Surge voltage 25V, 100ms max) (Refer to Derating for 5V and below)		9 - 36 (Surge voltage 50V, 100ms max) (Refer to Derating for 12V and below)		18 - 76 (Surge voltage 100V, 100ms max) (Refer to Derating for 24V and below)	
	CURRENT[A]	*2	0.60typ	0.60typ	0.30typ	0.30typ	0.149typ	0.151typ
	EFFICIENCY[%]	*2	84typ	84typ	84typ	84typ	84typ	83typ
OUTPUT	VOLTAGE[V]		±12 (+24)	±15 (+30)	±12 (+24)	±15 (+30)	±12 (+24)	±15 (+30)
	CURRENT[A]		0.25	0.2	0.25	0.2	0.25	0.2
	LINE REGULATION[mV]		60max	75max	60max	75max	60max	75max
	CROSS REGULATION[mV]	*3	480max	600max	480max	600max	480max	600max
		*4	600max	750max	600max	750max	600max	750max
	RIPPLE[mVp-p]	*6	120max	120max	120max	120max	120max	120max
	*5	*7	360max	360max	360max	360max	360max	360max
	RIPPLE NOISE[mVp-p]	*6	200max	200max	200max	200max	200max	200max
	*5	*7	500max	500max	500max	500max	500max	500max
	TEMPERATURE REGULATION[mV]	-20 to +50℃	180max	220max	180max	220max	180max	220max
		-40 to +50℃	290max	340max	290max	340max	290max	340max
	DRIFT[mV]	*8	48max	60max	48max	60max	48max	60max
	START-UP TIME[ms]		30max (Rated input, Io=100%)					
	OUTPUT VOLTAGE SETTING[V]		11.64 - 12.36	14.55 - 15.45	11.64 - 12.36	14.55 - 15.45	11.64 - 12.36	14.55 - 15.45
PROTECTION CIRCUIT AND OTHERS	OVERCURRENT PROTECTION		Works over 105% of rating and recovers automatically					
	REMOTE ON/OFF		Provided (Negative logic L:ON, H:OFF)					

GENERAL SPECIFICATIONS

ISOLATION	INPUT-OUTPUT	AC3,000V 1minute Cutoff current=1mA, DC4,200V 1minute Cutoff current=1mA, DC500V 1,000MΩ (20±15℃) 2MOOP (250VAC, 3,000m max)
ISOLATION CAPACITANCE	INPUT-OUTPUT	20pF max
ENVIRONMENT	OPERATING TEMP.,HUMID.AND ALTITUDE	-40 to +85℃, 20 to 95%RH (Non condensing) (Refer to Derating)
	STORAGE TEMP.,HUMID.AND ALTITUDE	-40 to +100℃, 20 to 95%RH (Non condensing)
	VIBRATION	10 - 55Hz 98.0m/s² (10G), 3minutes period, 60minutes each along X, Y and Z axis
	IMPACT	490.3m/s² (50G) 11ms, once each along X, Y and Z axis
SAFETY	AGENCY APPROVALS	UL62368-1, EN62368-1, C-UL (equivalent to CAN/CSA-C22.2 No.62368-1), ANSI/AAMI ES60601-1, EN60601-1 3rd, C-UL (equivalent to CAN/CSA-C22.2 No.60601-1)
OTHERS	CASE SIZE/WEIGHT	26.0×12.0×9.5mm [1.03×0.48×0.38 inches] (W×H×D) / 8g max
	COOLING METHOD	Convection/Forced air

✻1 Single output +24V, +30V with no use of COM.
✻2 Rated input 12V, 24V or 48V DC Io=100%
✻3 Symmetrical loading from 20% to 100%.
✻4 Symmetrical loading from 0% to 100%.
✻5 Ripple and ripple noise is measured by using test board with ceramic 0.1μF at 50mm from output pins. Po is total output power.
✻6 At Vin=4.5 - 16V (MHFW612xx), Vin=9 - 30V (MHFW624xx), Vin=18 - 60V (MHFW648xx) / Po=30 - 100%.
✻7 At Vin=4.5 - 16V (MHFW612xx), Vin=9 - 30V (MHFW624xx), Vin=18 - 60V (MHFW648xx) / Po=0 - 30%.
At Vin=16 - 18V (MHFW612xx), Vin=30 - 36V (MHFW624xx), Vin=60 - 76V (MHFW648xx) / Po=0 - 100%.
✻8 Drift is the DC output accuracy for eight hours period after a half-hour warm-up at 25℃.
✻ Parallel operation is not possible.

External view

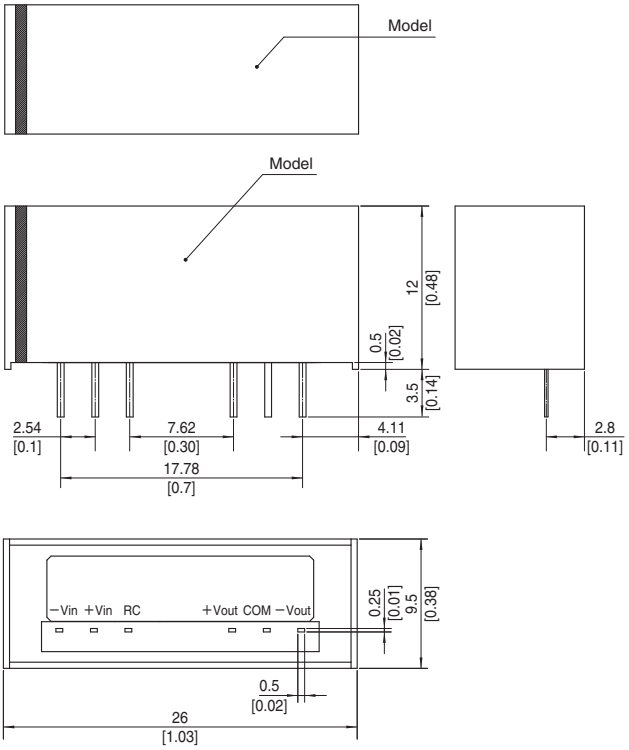

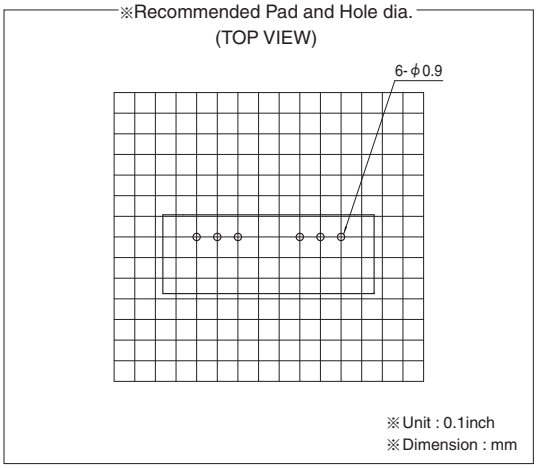

※ Tolerance ±0.5 [±0.02]
※ Dimensions in mm, [ ]= inches
※ Pin terminal material : Copper
※ Planting treatment of terminal : Lead free plating
※ Case material : PBT
※ Weight 8g max

Pin Connection

●MH3/MH6 Single Output, Dual output

<Bottom View>



(a)MH3

<Bottom View>



(b)MH6

Pin No.	Pin Name	Function
①	-Vin	-DC Input
②	+Vin	+DC Input
③	RC	Remote ON/OFF
⑥	+Vout	+DC Output
⑦	-Vout	-DC Output (for Single Output)
	COM	GND of Output Voltage (for Dual Output)
⑧	TRM	Output Voltage Adjustment (for Single Output)
	-Vout	-DC Output (for Dual Output)

Assembling and Installation Method

Installation

■When two or more power supplies are used side by side, position them with proper intervals to allow enough air ventilation. Ambient temperature around each power supply should not exceed the temperature range shown in “Derating”.

■Avoid placing the DC input line pattern layout underneath the unit.It will increase the line conducted noise. Make sure to leave an ample distance between the line pattern layout and the unit. Also avoid placing the DC output line pattern underneath the unit because it may increase the output noise. Lay out the pattern away from the unit.

■Avoid placing the signal line pattern layout underneath the unit because the power supply might become unstable.
Lay out the pattern away from the unit.

■If insulation is required, design the board considering the distance required for insulation between the input and output.

■Avoid pattern wiring in the shaded area, because the surface of the mounting board on which the power supply is mounted may cause insulation failure between input and output.

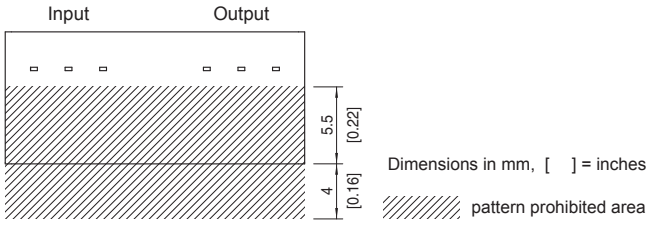

<Top view>

Soldering Conditions

(1) Flow Soldering : 260℃ 15 seconds or less
(2) Soldering Iron : maximum 360℃ 5 seconds or less

Stress to Pin

■Applying excessive stress to the input or output pins of the unit may damage internal connections. Avoid applying stress in excess of that shown in right figure.

■Input/output pins are soldered to the PCB internally.
Do not pull or bend a lead powerfully.

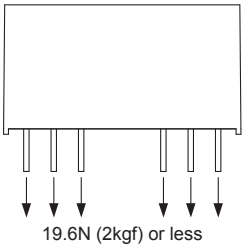

■If it is expected that stress is applied to the input/output pins due to vibration or impact, reduce the stress to the pin by taking such measures as fixing the unit to the PCB by silicone rubber, etc.

■Due to prevent failure, unit should not be pulled after soldering with PCB.

Derating

Derating curve for input voltage

●MH6

■MHFS6, MHFW6 has derating by input voltage is required. shown below.

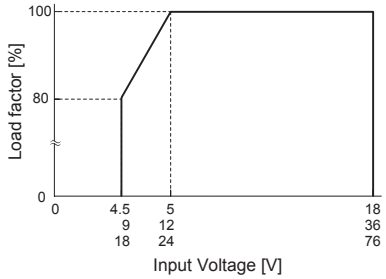

Ambient temperature derating curve

■It is necessary to note thermal fatigue life by power cycle. Please reduce the temperature fluctuation range as much as possible when the up and down of temperature are frequently generated.

■In case of forced air, ventilation must keep the temperature of point below the temperatures shown in Instruction Manual 7.

■Model name

The following letters / numbers are entered in □.

ex.) ・・・MHF□312□

S, W / 3R3, 05, 09, 12, 15

●MH3 (Rated Input Voltage)

(1) In the case of Convection Cooling (Reference)

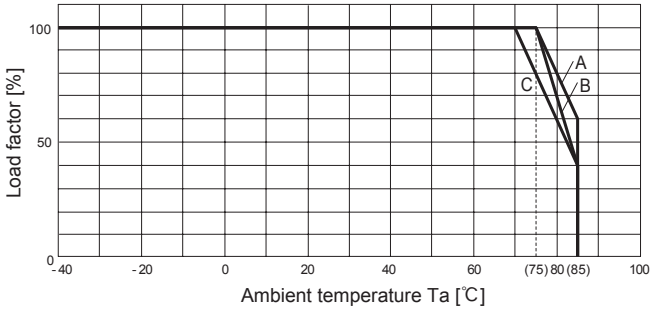

Output Voltage / Model name	3.3	5	9	12	15	±12	±15
MHF□312□	B	B	A	A	A	C	C
MHF□324□	A	B	B	B	B	C	C
MHF□348□	A	B	A	A	B	C	C

(2) In the case of Forced Air Cooling (1.0m/s) (Reference)

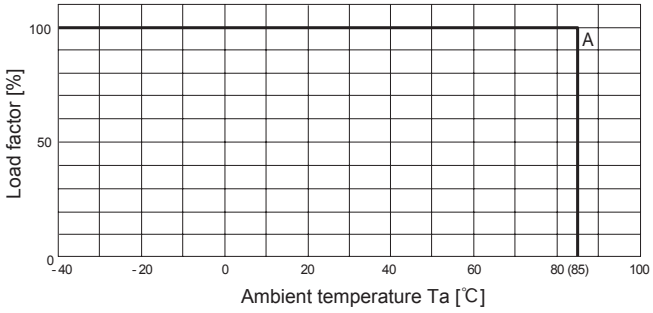

Output Voltage / Model name	3.3	5	9	12	15	±12	±15
MHF□312□	A	A	A	A	A	A	A
MHF□324□	A	A	A	A	A	A	A
MHF□348□	A	A	A	A	A	A	A

●MH6 (Rated Input Voltage)

■In the hatched area, the specification of Ripple, Ripple Noise is different from other area.

(1) In the case of Convection Cooling (Reference)

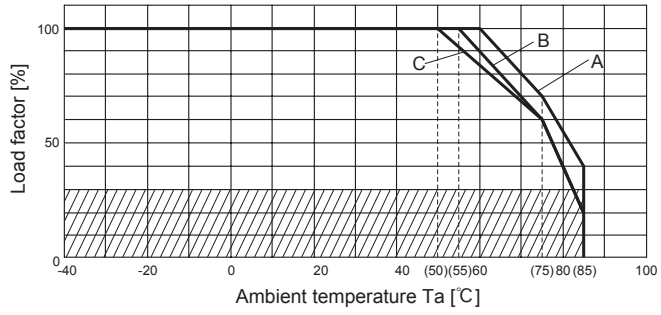

Output Voltage / Model name	3.3	5	9	12	15	±12	±15
MHF□612□	C	C	B	B	B	B	B
MHF□624□	C	C	B	B	B	B	B
MHF□648□	B	B	A	A	A	A	A

(2) In the case of Forced Air Cooling (1.0m/s) (Reference)

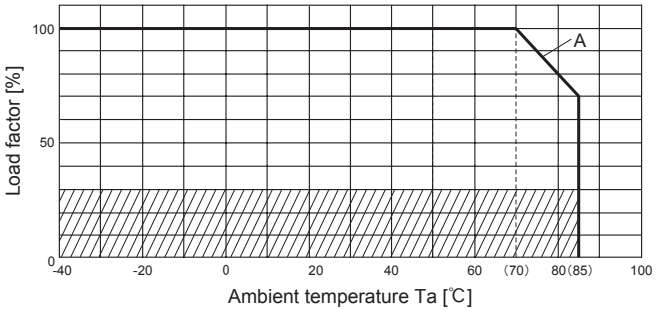

Output Voltage / Model name	3.3	5	9	12	15	±12	±15
MHF□612□	A	A	A	A	A	A	A
MHF□624□	A	A	A	A	A	A	A
MHF□648□	A	A	A	A	A	A	A

Instruction Manual

◆ It is neccessary to read the “Instruction Manual” and “Before using our product” before you use our product.

Instruction Manual	https://en.cosel.co.jp/product/powersupply/MHFS/
Instruction Manual	https://en.cosel.co.jp/product/powersupply/MHFW/
Before using our product	https://en.cosel.co.jp/technical/caution/index.html

MHFS MHFW NOTICE

Basic Characteristics Data

Model	Circuit method	Switching frequency [kHz] (reference)	Input current [A]	Inrush current protection	PCB/Pattern			Series/Redundancy operation availability	
					Material	Single sided	Double sided	Series operation	Redundancy operation
MH3	Flyback converter	200-1500 ∗3	∗1	-	glass fabric base,epoxy resin		Yes	Yes	∗2
MH6	Flyback converter	150-1400 ∗3	∗1	-	glass fabric base,epoxy resin		Yes	Yes	∗2

∗1 Refer to Specification.
∗2 Refer to Instruction Manual.
∗3 The value changes depending on input and load.