P R
B X

POWERBOX Defense Line
OFD1200A Series
1200W Single Output
AC/DC Baseplate Power Supply

OFD1200A – a powerful baseplate cooling power supply for defense applications. The design to meet MIL-STD makes it be solution from off-the-shelf products. A product that is suitable for wide application areas in industrial and others. Ruggedized construction makes it ideal for harsh environmental applications.



Features
Conductive cooling
Conformal coating
Output active ORing (optional only 28Vdc & 48Vdc)
Active current shared paralleling & Redundancy operation
Voltage & Current, wide range adjustable (see manual)
Vibration/shock according MIL-STD-810H
EMC according to MIL-STD-461 CE-102
Meet MIL-STD-1399-300
Power Good, Remote sense, Remote On/Off
OCP, OVP, OTP, SCP

Input	
Input voltage range	85-305VAC
Nominal input voltage	100-277VAC
Input voltage DC	No
Input frequency	47-63Hz
Protection class	I (with ground)
Power factor	0.98/0.95 (110VAC/230VAC)
Inrush current	40A typ.
Input current @110/230VAC	12V: 10.9A/ 5.1A 28V, 48V and 65V: 12.5A/ 5.8A
Hold up time	20ms (230VAC, Full load)
Input fuse	Yes
Turn on time	600ms typ. (Remote on 100ms) @-40°C deg. [1]
Leakage current	<1.5mA at 277VAC/60Hz

Output	
Output volt./Cur./Power	See table
Output peak power	N/A
Minimum load	0A
Line regulation	0.5% mV max
Load regulation	0.5% mV max. 10-90% load change
Temp. coefficient	± 0.02%/°C
Ripple & noise (20MHz BW)	1%, :1,5% for 12Vdc. (2% below 0°C)
Output voltage adj.	Potentiometer & ext. voltage. [2]
Paralleling	Yes, up to 9 units

Environmental	
Operating temperature (Baseplate temperature)	-40°C to +95°C
Operating temperature (Ambient temperature)	-40°C to +80°C
Derating	See manual
Operating humidity	20-95%RH (Non condensing)
Altitude operation	max. 5000m
Storage temperature	-40°C to +85°C
Storage humidity	20-95%RH (Non condensing)
Vibration	MIL-STD810H, Method 514.8, Category 24, Figure 514.8E-1.
Shock	MIL-STD-810H, Procedure 1, 20G 11ms
Mechanical	
Size WxHxD	142x40x340mm
IP class	IPX0
Weight	1.8kg typ.
Connectors	Input: Phoenix MKDS 5/ 3-9,5 (1714984) Output: Studs/M6 Screw Signals: Molex 818311041
Connector placement	Input and Output on the opposite side
General	
MTBF Telcordia	>1,990,000h @ 25°C, full load
Life time expectations	See manual

Model Number	**Output Voltage**	**Output Current**	**Output Voltage adj. [2]**	**Efficiency 110VAC/230VAC**
OFD1200A12	12VDC	~0-84A	~0-14.4VDC	84% / 86.5%
OFD1200A28	28VDC	~0-43A	~0-33.6VDC	88% / 90.5%
OFD1200A48	48VDC	~0-25A	~0-57.6VDC	89% / 92%
OFD1200A65	65VDC	~0-18.5A	~0-78.0VDC	88% / 91%

PBSE10273711A 2023.10.11
Specifications are subject to change without notice.

Protection Circuit and Others	
Over current protection	Yes, works over 105% of rating auto recovery
Type of current limit	Hiccup [3]
Constant current mode	Yes (when current level adjusted otherwise hiccup)
Over voltage protection	Yes
Over temp. protection	Yes
Remote sensing	Yes
Remote ON/OFF	Yes
Output LED	Yes, green (operate only at nominal o/p voltage)
Active ORing	Only for 28V & 48V version (optional)

Control and Communication	
Power Good	Yes, Normal operation: Low
VTRM, ITRM	Yes

Isolation	
Input -Output, RC	3000VAC
Input-FG	2000VAC
Output-FG	500VAC
Output - RC, PG	100VAC

Safety Standards	
UL certificate	UL62368-1 3rd ed. 2019 CSA 22.2 No. 62368-1:19 3rd ed.
CB certificate evaluated to	IEC 62368-1:2018 EN62368-1:2020+A11:2020 BS EN62368-1:2020+A11:2020
Certification mark	CE, UKCA, cURus
RoHS	Yes, Directive 2011/65/EU (2015/863)

EMC		
Harmonic attenuator	EN61000-3-2 class A, (C >50% load)	
Flicker	EN61000-3-3	
Conducted noise	MIL-STD-461, CE 102	
Radiated noise	EN55032 class A [4]	
EMS immunity	Standards	Criterion
	EN61000-4-2	A
	EN61000-4-3	A
	EN61000-4-4	A[5]
	EN61000-4-5	B
	EN61000-4-6	A
	EN61000-4-8	A
	EN61000-4-11	B

Part numbers and options

OFD1200A	XX	-	NY
	O/p Voltage		Y: Option or blank
	12: 12VDC		Option O: Oring (only for 28 & 48)
	28: 28VDC		
	48: 48VDC		
	65: 65VDC		

Note

1. For startup below -20°C see manual.
2. Wide output adj. see manual. Full adj. range only when use external voltage VTRM. On board potentiometer adj. range 35% to 120% of nominal o/p voltage. For option -O: o/p adj. range 1V to 120% of nominal voltage.
3. See manual
4. For OFD1200A65, tested with the ferrite clamp 742 715 5 from Wurth Electronics with two turns wiring on the output cable
5. The criterion on the test frequency 100KHz: B

Block diagram

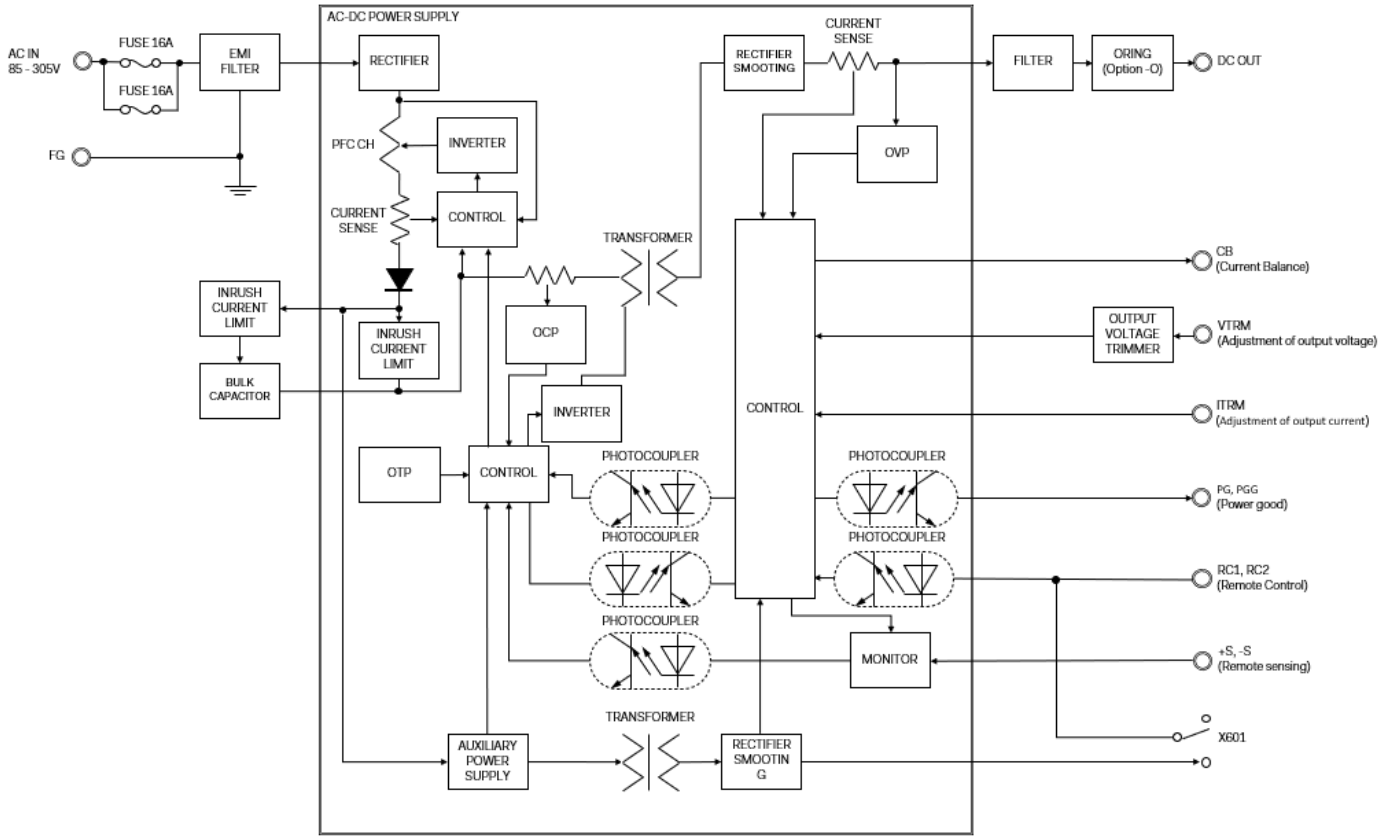

Mechanical dimensions

