Medical electric equipment | Power Factor Correction | World wide | Low Profile | Safety Approvals | Inrush current limiting | Isolated | OCP | OVP | Remote ON/OFF | Parallel Operation

TUNS-series

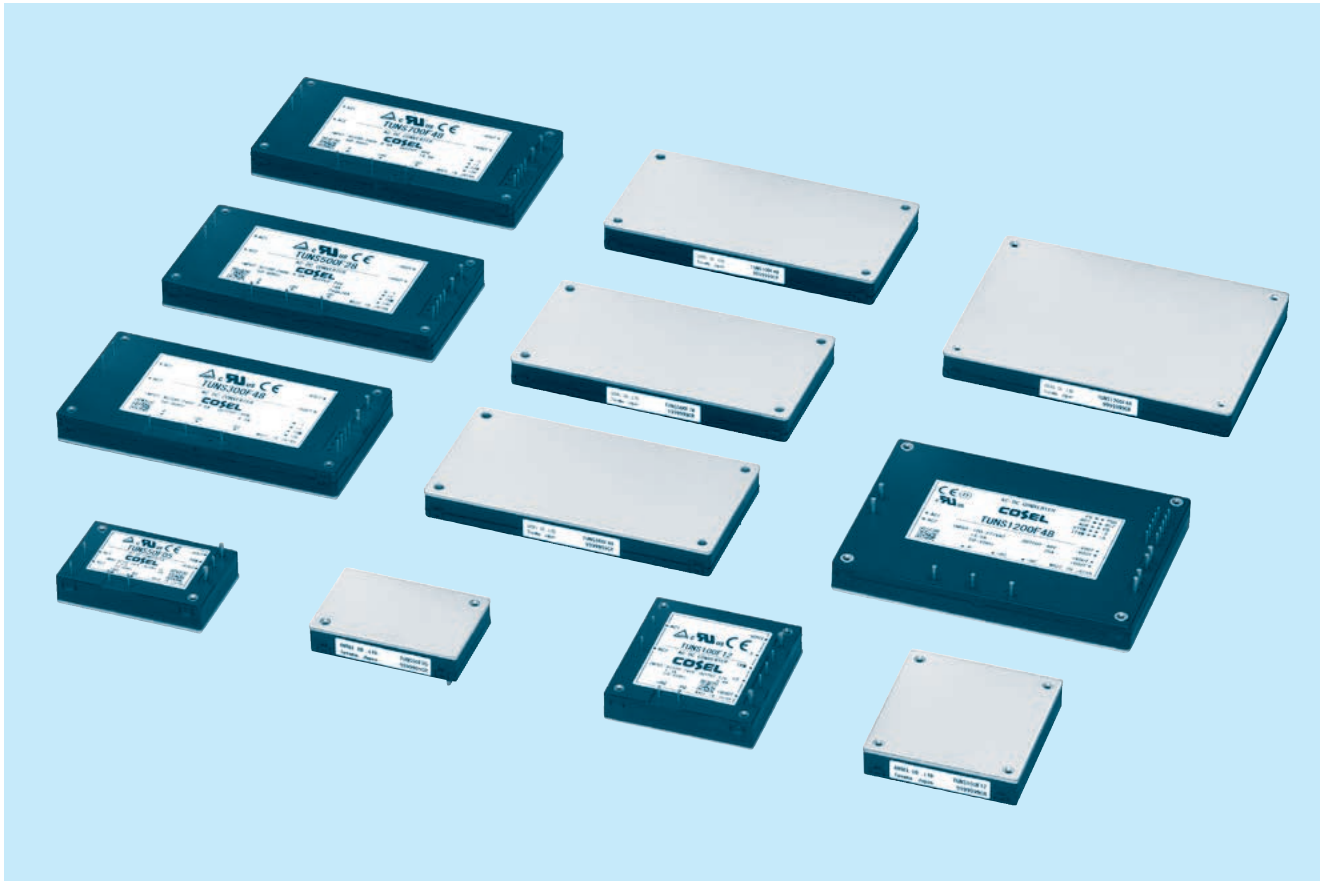

Feature

AC-DC Power Module Type Converter
Harmonic attenuator (Complies with IEC61000-3-2 class A)
Thin and small size
Built-in overcurrent, overvoltage and thermal protection circuits
Mounting hole (M3 tapped)

<TUNS50F/100F/300F/500F/700F>
Universal input 85 - 264VAC
Peak current (TUNS500F)

<TUNS1200F>
Wide input 85 - 305VAC
For medical electric equipment
Constant current regulation
Output voltage can be varied to near 0V
Parallel operation possible

CE marking

Low voltage directive
RoHS Directive

UKCA marking

Electrical Equipment Safety Regulations
RoHS Regulations

Safety Approval

UL60950-1, C-UL, EN62368-1
(TUNS50F/100F/300F/500F/700F)
UL62368-1, C-UL, EN62368-1 (TUNS1200F)
ANSI/AAMI ES60601-1, EN60601-1 3rd (TUNS1200F)

5-year warranty

Optional parts

Heat sink

COSEL AC-DC Power Supplies Bus Converter·Power Module Type

TUNS50F

Ordering information

TUN	S	50	F	05	-□
①	②	③	④	⑤	⑥

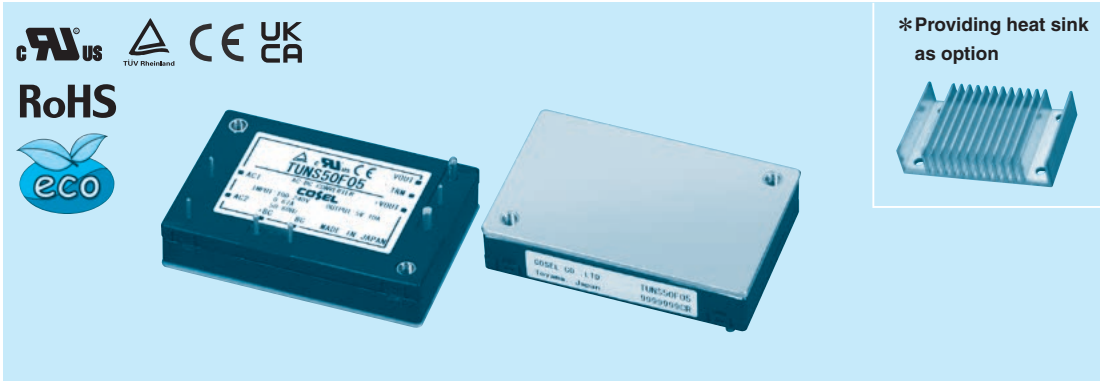

＊Providing heat sink as option

①Series name
②Single output
③Output wattage
④Universal Input
⑤Output voltage
⑥Optional
T : with Mounting hole (ϕ3.4 thru)

＊Avoid short circuit between +BC and -BC. It may cause the failure of inside components.
＊Keep TRM open, if output voltage adjustment is not necessary.

MODEL	TUNS50F05	TUNS50F12	TUNS50F24
MAX OUTPUT WATTAGE[W]	50.0	50.4	50.4
DC OUTPUT	5V 10A	12V 4.2A	24V 2.1A

SPECIFICATIONS

	MODEL		TUNS50F05	TUNS50F12	TUNS50F24
INPUT	VOLTAGE[V]		AC85 - 264 1ϕ (Refer to "Derating")		
	CURRENT[A]	ACIN 100V	0.67typ (Io=100%)		
		ACIN 200V	0.35typ (Io=100%)		
	FREQUENCY[Hz]		50/60 (47 - 63)		
	EFFICIENCY[%]	ACIN 100V	79typ	83typ	84typ
		ACIN 200V	81typ	84typ	86typ
	POWER FACTOR (Io=100%)	ACIN 100V	0.95typ		
		ACIN 200V	0.90typ		
	INRUSH CURRENT		Limited by external components (Thermistor)		
	LEAKAGE CURRENT[mA]		0.75max (ACIN 240V 60Hz, Io=100%, According to IEC62368-1)		
OUTPUT	VOLTAGE[V]		5	12	24
	CURRENT[A]		10	4.2	2.1
	LINE REGULATION[mV]		10max	24max	48max
	LOAD REGULATION[mV]		10max	24max	48max
	RIPPLE[mVp-p]	0 to +100℃ ＊1	80max	120max	120max
		-40 to 0℃ ＊1	120max	150max	150max
		0 to 15% Load ＊1	200max	280max	380max
	RIPPLE NOISE[mVp-p]	0 to +100℃ ＊1	120max	150max	150max
		-40 to 0℃ ＊1	200max	200max	250max
		0 to 15% Load ＊1	280max	360max	460max
	TEMPERATURE REGULATION[mV]	0 to +65℃	50max	120max	240max
		-40 to +100℃	100max	240max	480max
	DRIFT[mV] ＊2		20max	40max	90max
	OUTPUT VOLTAGE ADJUSTMENT RANGE[V]		Fixed (TRM pin open), adjustable by external resistor or external signal		
			4.50 - 6.00	10.80 - 13.20	21.60 - 26.40
	OUTPUT VOLTAGE SETTING[V]		4.97 - 5.13	11.91 - 12.29	23.62 - 24.38
PROTECTION CIRCUIT AND OTHERS	OVERCURRENT PROTECTION		Works over 105% of rating and recovers automatically		
	OVERVOLTAGE PROTECTION[V]		6.30 - 7.00	13.90 - 16.35	27.60 - 32.40
	REMOTE SENSING		Not provided		
	REMOTE ON/OFF		Not provided		
ISOLATION	INPUT-OUTPUT		AC3,000V 1minute, Cutoff current = 10mA, DC500V 50MΩ min (20±15℃)		
	INPUT-FG		AC2,000V 1minute, Cutoff current = 10mA, DC500V 50MΩ min (20±15℃)		
	OUTPUT-FG		AC500V 1minute, Cutoff current = 100mA, DC500V 50MΩ min (20±15℃)		
ENVIRONMENT	OPERATING TEMP.,HUMID.AND ALTITUDE		-40 to +100℃ (On aluminum base plate), 20 - 95%RH (Non condensing) (Refer to "Derating"), 3,000m (10,000 feet) max		
	STORAGE TEMP.,HUMID.AND ALTITUDE		-40 to +100℃, 20 - 95%RH (Non condensing), 9,000m (30,000 feet) max		
	VIBRATION		10 - 55Hz, 49.0m/s² (5G), 3minutes period, 60minutes each along X, Y and Z axis		
	IMPACT		196.1m/s² (20G), 11ms, once each along X, Y and Z axis		
SAFETY AND NOISE REGULATIONS	AGENCY APPROVALS		UL60950-1, C-UL (CSA60950-1), EN62368-1		
	HARMONIC ATTENUATOR		Complies with IEC61000-3-2 (Class A) ＊3		
OTHERS	CASE SIZE/WEIGHT		58.4×12.7×37.3mm [2.3×0.5×1.47 inches] (W×H×D) / 80g max		
	COOLING METHOD		Conduction cooling (e.g. heat radiation from the aluminum base plate to the attached heat sink)		

＊1 Refer to instruction manual for measuring method of electric characteristics.
＊2 Drift is the change in DC output for an eight hour period after a half-hour warm-up at 25℃, with the input voltage held constant at the rated input/output.
＊3 Please contact us about another class.

External view

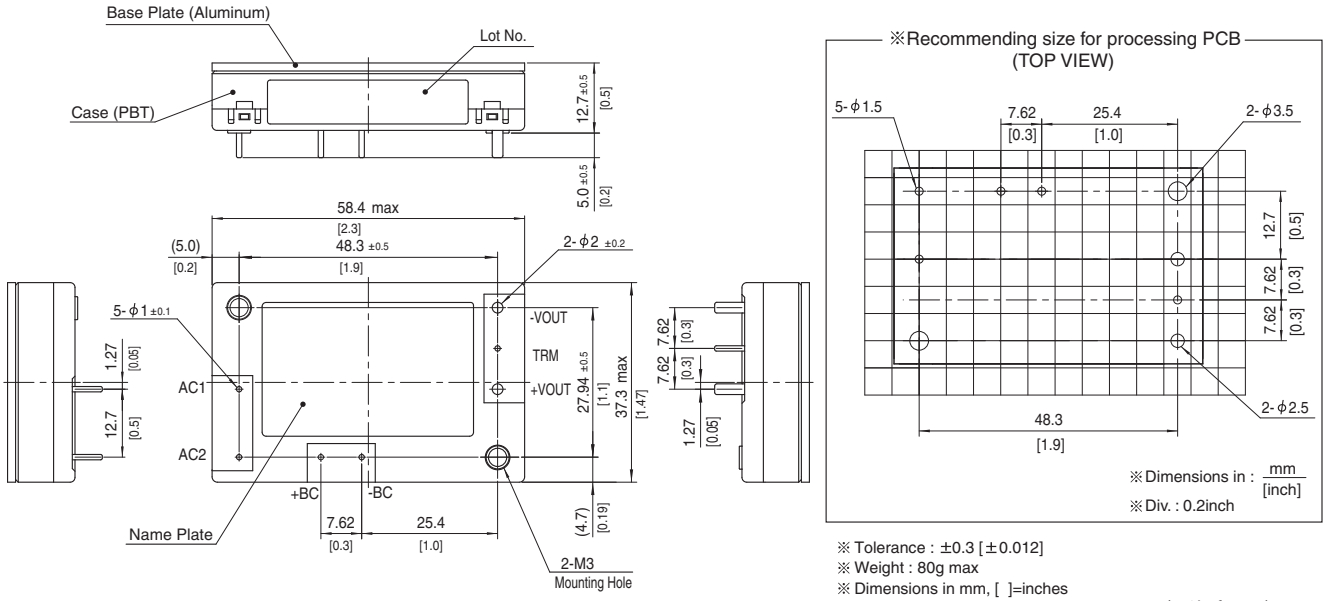

※ Tolerance : ±0.3 [±0.012]
※ Weight : 80g max
※ Dimensions in mm, [ ]=inches
※ Mounting hole screwing torque : 0.49N・m (5.0kgf・cm) max

COSEL AC-DC Power Supplies Bus Converter·Power Module Type

TUNS100F

Ordering information

TUN	S	100	F	05	-□
①	②	③	④	⑤	⑥

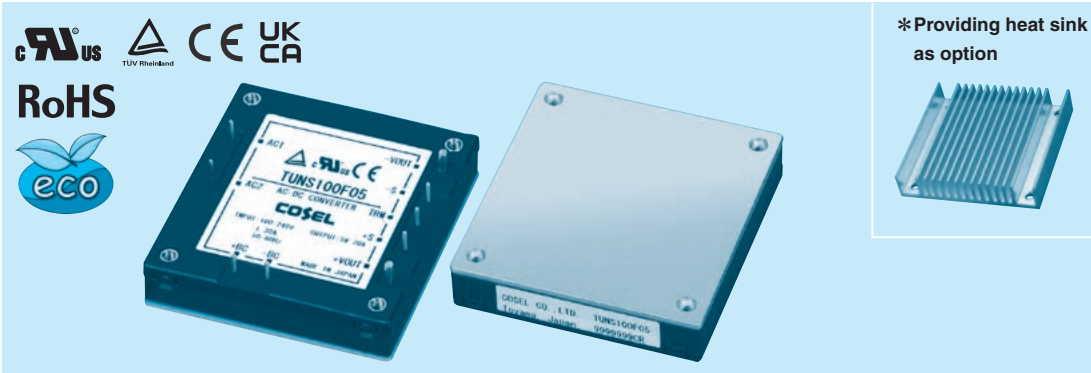

＊Providing heat sink as option

①Series name
②Single output
③Output wattage
④Universal Input
⑤Output voltage
⑥Optional
T : with Mounting hole (ϕ3.4 thru)

＊Avoid short circuit between +BC and -BC. It may cause the failure of inside components.
＊Keep TRM open, if output voltage adjustment is not necessary.
＊If remote sensing is not necessary, connect between +Vout & +S and between -Vout & -S.

MODEL	TUNS100F05	TUNS100F12	TUNS100F24
MAX OUTPUT WATTAGE[W]	100.0	100.8	100.8
DC OUTPUT	5V 20A	12V 8.4A	24V 4.2A

SPECIFICATIONS

	MODEL		TUNS100F05	TUNS100F12	TUNS100F24
INPUT	VOLTAGE[V]		AC85 - 264 1ϕ (Refer to "Derating")		
	CURRENT[A]	ACIN 100V	1.3typ (Io=100%)		
		ACIN 200V	0.7typ (Io=100%)		
	FREQUENCY[Hz]		50/60 (47 - 63)		
	EFFICIENCY[%]	ACIN 100V	82typ	83typ	84typ
		ACIN 200V	85typ	85typ	86typ
	POWER FACTOR (Io=100%)	ACIN 100V	0.95typ		
		ACIN 200V	0.90typ		
	INRUSH CURRENT		Limited by external components (Thermistor)		
	LEAKAGE CURRENT[mA]		0.75max (ACIN 240V 60Hz, Io=100%, According to IEC62368-1)		
OUTPUT	VOLTAGE[V]		5	12	24
	CURRENT[A]		20	8.4	4.2
	LINE REGULATION[mV]		10max	24max	48max
	LOAD REGULATION[mV]		10max	24max	48max
	RIPPLE[mVp-p]	0 to +100℃ ＊1	80max	120max	120max
		-40 to 0℃ ＊1	120max	150max	150max
		0 to 15% Load ＊1	160max	240max	240max
	RIPPLE NOISE[mVp-p]	0 to +100℃ ＊1	120max	150max	150max
		-40 to 0℃ ＊1	200max	200max	250max
		0 to 15% Load ＊1	240max	300max	300max
	TEMPERATURE REGULATION[mV]	0 to +65℃	50max	120max	240max
		-40 to +100℃	100max	240max	480max
	DRIFT[mV] ＊2		20max	40max	90max
	OUTPUT VOLTAGE ADJUSTMENT RANGE[V]		Fixed (TRM pin open), adjustable by external resistor or external signal		
			4.50 - 6.00	10.80 - 13.20	21.60 - 26.40
	OUTPUT VOLTAGE SETTING[V]		4.97 - 5.13	11.91 - 12.29	23.62 - 24.38
PROTECTION CIRCUIT AND OTHERS	OVERCURRENT PROTECTION		Works over 105% of rating and recovers automatically		
	OVERVOLTAGE PROTECTION[V]		6.30 - 7.00	13.90 - 16.35	27.60 - 32.40
	REMOTE SENSING		Provided		
	REMOTE ON/OFF		Not provided		
ISOLATION	INPUT-OUTPUT		AC3,000V 1minute, Cutoff current = 10mA, DC500V 50MΩ min (20±15℃)		
	INPUT-FG		AC2,000V 1minute, Cutoff current = 10mA, DC500V 50MΩ min (20±15℃)		
	OUTPUT-FG		AC500V 1minute, Cutoff current = 100mA, DC500V 50MΩ min (20±15℃)		
ENVIRONMENT	OPERATING TEMP.,HUMID.AND ALTITUDE		-40 to +100℃ (On aluminum base plate), 20 - 95%RH (Non condensing) (Refer to "Derating"), 3,000m (10,000 feet) max		
	STORAGE TEMP.,HUMID.AND ALTITUDE		-40 to +100℃, 20 - 95%RH (Non condensing), 9,000m (30,000 feet) max		
	VIBRATION		10 - 55Hz, 49.0m/s² (5G), 3minutes period, 60minutes each along X, Y and Z axis		
	IMPACT		196.1m/s² (20G), 11ms, once each along X, Y and Z axis		
SAFETY AND NOISE REGULATIONS	AGENCY APPROVALS		UL60950-1, C-UL (CSA60950-1), EN62368-1		
	HARMONIC ATTENUATOR		Complies with IEC61000-3-2 (Class A) ＊3		
OTHERS	CASE SIZE/WEIGHT		58.4×12.7×61.0mm [2.3×0.5×2.4 inches] (W×H×D) / 120g max		
	COOLING METHOD		Conduction cooling (e.g. heat radiation from the aluminum base plate to the attached heat sink)		

＊1 Refer to instruction manual for measuring method of electric characteristics.
＊2 Drift is the change in DC output for an eight hour period after a half-hour warm-up at 25℃, with the input voltage held constant at the rated input/output.
＊3 Please contact us about another class.

External view

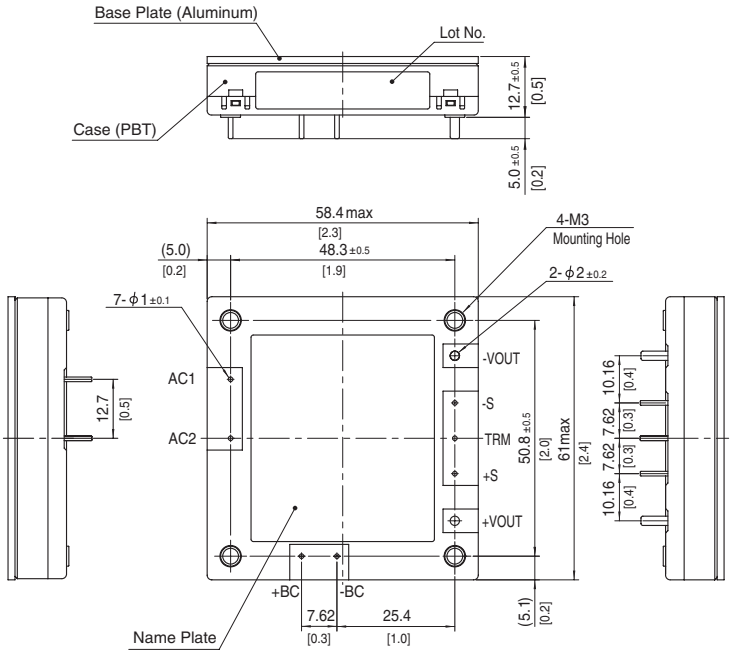

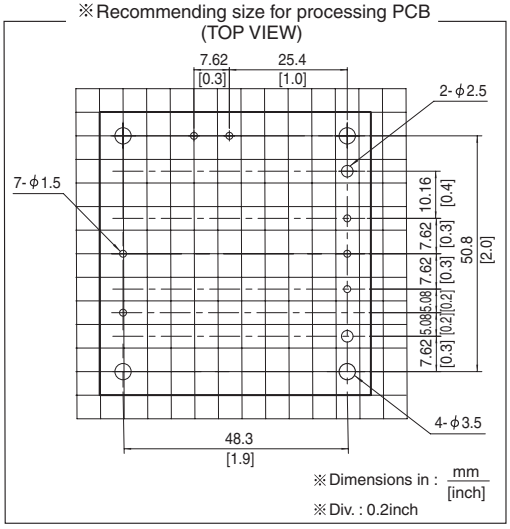

※Tolerance : ±0.3 [±0.012]
※Weight : 120g max
※Dimensions in mm, [ ]=inches
※Mounting hole screwing torque : 0.49N・m (5.0kgf・cm) max

COSEL AC-DC Power Supplies Bus Converter·Power Module Type

TUNS300F

Ordering information

TUN	S	300	F	48	-□
①	②	③	④	⑤	⑥

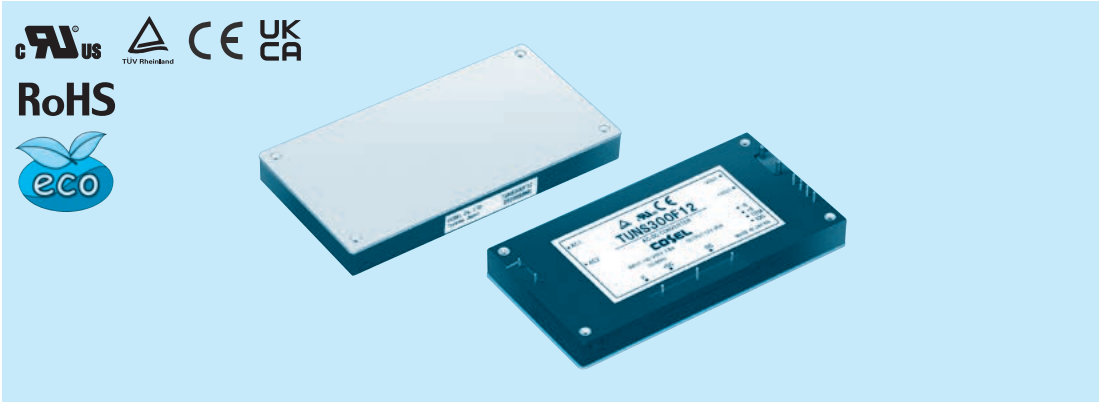

①Series name
②Single output
③Output wattage
④Universal Input
⑤Output voltage
⑥Optional
T : with Mounting hole (φ3.4 thru)
Y1: Outputvoltage adjustment range ±20% (Only 48V)
R1: with Remote ON/OFF (Negative logic control)
R2: with Remote ON/OFF (Negative logic and Low standby power)
R3: with Remote ON/OFF (Positive logic control)
N1: Auto restart from thermal protection

✻Avoid short circuit between +BC/R and -BC. It may cause the failure of inside components.
✻Keep TRM open, if output voltage adjustment is not necessary.
✻If remote sensing is not necessary, connect between +Vout & +S and between -Vout & -S.

MODEL	TUNS300F12	TUNS300F28	TUNS300F48
MAX OUTPUT WATTAGE[W]	300	308	312
DC OUTPUT	12V 25A	28V 11A	48V 6.5A

SPECIFICATIONS

	MODEL		TUNS300F12	TUNS300F28	TUNS300F48
INPUT	VOLTAGE[V]		AC85 - 264 1φ		
	CURRENT[A]	ACIN 100V	3.6typ (Io=100%)		
		ACIN 200V	1.8typ (Io=100%)		
	FREQUENCY[Hz]		50/60 (47 - 63)		
	EFFICIENCY[%]	ACIN 100V	84typ	87typ	87typ
		ACIN 200V	86typ	89typ	90typ
	POWER FACTOR (Io=100%)	ACIN 100V	0.96typ		
		ACIN 200V	0.93typ		
	INRUSH CURRENT		Limited by external resistance		
	LEAKAGE CURRENT[mA]		0.75max (ACIN 240V 60Hz, Io=100%, According to IEC62368-1)		
OUTPUT	VOLTAGE[V]		12	28	48
	CURRENT[A]		25	11	6.5
	LINE REGULATION[mV]		24max	56max	96max
	LOAD REGULATION[mV]		24max	56max	96max
	RIPPLE[mVp-p]	0 to +100℃ ✻1	120max	180max	250max
		-40 to 0℃ ✻1	150max	200max	300max
	RIPPLE NOISE[mVp-p]	0 to +100℃ ✻1	150max	200max	300max
		-40 to 0℃ ✻1	200max	300max	450max
	TEMPERATURE REGULATION[mV]	0 to +65℃	120max	280max	480max
		-40 to +100℃	240max	560max	960max
	DRIFT[mV]	✻2	40max	90max	180max
	OUTPUT VOLTAGE ADJUSTMENT RANGE[V]		Fixed (TRM pin open), adjustable by external resistor or external signal		
			9.60 - 14.40	22.40 - 33.60	38.40 - 52.80 (-Y1 Option : 38.4 - 57.6)
	OUTPUT VOLTAGE SETTING[V]		11.91 - 12.29	27.56 - 28.44	47.24 - 48.76
PROTECTION CIRCUIT AND OTHERS	OVERCURRENT PROTECTION		Works over 105% of rating and recovers automatically		
	OVERVOLTAGE PROTECTION[V]		15.00 - 16.80	35.00 - 39.20	55.20 - 64.80 (-Y1 Option : 60.0 - 67.2)
	REMOTE SENSING		Provided		
	REMOTE ON/OFF		Optional (External power supply is required)		
ISOLATION	INPUT-OUTPUT · RC	✻4	AC3,000V 1minute, Cutoff current = 10mA, DC500V 50MΩ min (20±15℃)		
	INPUT-FG		AC2,000V 1minute, Cutoff current = 10mA, DC500V 50MΩ min (20±15℃)		
	OUTPUT · RC-FG	✻4	AC500V 1minute, Cutoff current = 100mA, DC500V 50MΩ min (20±15℃)		
	OUTPUT-RC	✻4	AC100V 1minute, Cutoff current = 100mA, DC100V 10MΩ min (20±15℃)		
ENVIRONMENT	OPERATING TEMP.,HUMID.AND ALTITUDE		-40 to +100℃ (On aluminum base plate), 20 - 95%RH (Non condensing) (Refer to "Derating"), 3,000m (10,000 feet) max		
	STORAGE TEMP.,HUMID.AND ALTITUDE		-40 to +100℃, 20 - 95%RH (Non condensing), 9,000m (30,000 feet) max		
	VIBRATION		10 - 55Hz, 49.0m/s² (5G), 3minutes period, 60minutes each along X, Y and Z axis		
	IMPACT		196.1m/s² (20G), 11ms, once each along X, Y and Z axis		
SAFETY AND NOISE REGULATIONS	AGENCY APPROVALS		UL60950-1, C-UL (CSA60950-1), EN62368-1		
	HARMONIC ATTENUATOR		Complies with IEC61000-3-2 (Class A) ✻3		
OTHERS	CASE SIZE/WEIGHT		117.3×12.7×61.5mm [4.62×0.5×2.42 inches] (W×H×D) / 190g max		
	COOLING METHOD		Conduction cooling (e.g. heat radiation from the aluminum base plate to the attached heat sink)		

✻1 Refer to instruction manual for measuring method of electric characteristics.
✻2 Drift is the change in DC output for an eight hour period after a half-hour warm-up at 25℃, with the input voltage held constant at the rated input/output.
✻3 Please contact us about another class.
✻4 "RC" is applicable when remote control (optional) is added.

External view

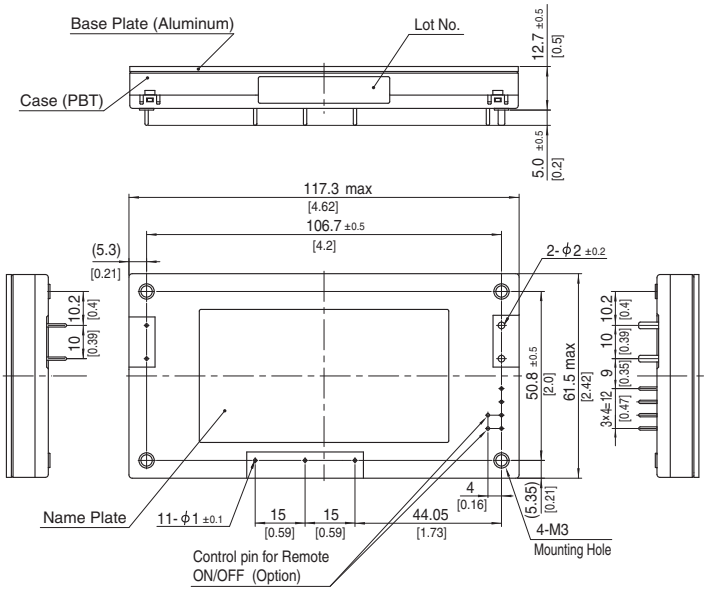

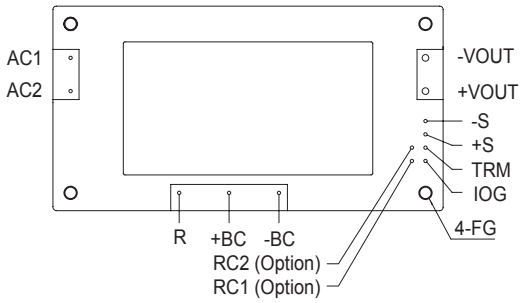

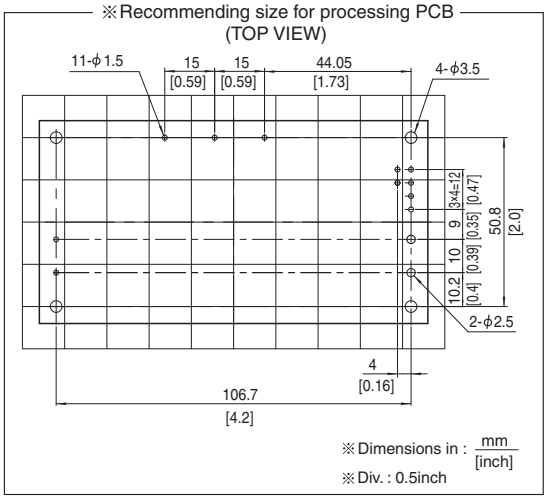

※Tolerance : ±0.3 [±0.012]
※Weight : 190g max
※Dimensions in mm, [ ]=inches
※Mounting hole screwing torque : 0.49N・m (5.0kgf・cm) max

COSEL AC-DC Power Supplies Bus Converter・Power Module Type

TUNS500F

Ordering information

TUN	S	500	F	48	-□
①	②	③	④	⑤	⑥

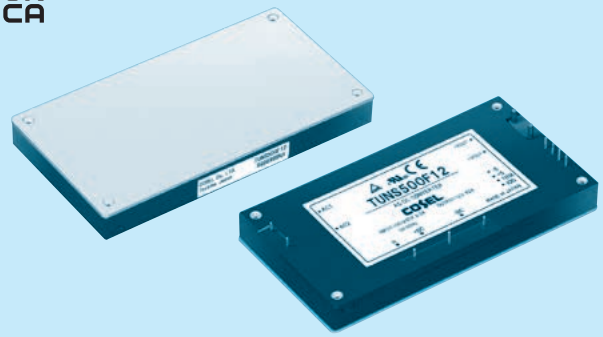

①Series name
②Single output
③Output wattage
④Universal Input
⑤Output voltage
⑥Optional
T : with Mounting hole (φ3.4 thru)
Y1: Outputvoltage adjustment range ±20% (Only 48V)
R1: with Remote ON/OFF (Negative logic control)
R2: with Remote ON/OFF (Negative logic and Low standby power)
R3: with Remote ON/OFF (Positive logic control)
N1: Auto restart from thermal protection

✻Avoid short circuit between +BC/R and -BC. It may cause the failure of inside components.
✻Keep TRM open, if output voltage adjustment is not necessary.
✻If remote sensing is not necessary, connect between +Vout & +S and between -Vout & -S.

MODEL	TUNS500F12	TUNS500F28	TUNS500F48
MAX OUTPUT WATTAGE[W]	504	504	504
DC OUTPUT	12V 42A (Peak 55A)	28V 18A (Peak 24A)	48V 10.5A (Peak 14A)

SPECIFICATIONS

	MODEL		TUNS500F12	TUNS500F28	TUNS500F48
INPUT	VOLTAGE[V]		AC85 - 264 1φ		
	CURRENT[A]	ACIN 100V	6.0typ (Io=100%)		
		ACIN 200V	3.0typ (Io=100%)		
	FREQUENCY[Hz]		50/60 (47 - 63)		
	EFFICIENCY[%]	ACIN 100V	84typ	87typ	88typ
		ACIN 200V	86typ	90typ	90.5typ
	POWER FACTOR (Io=100%)	ACIN 100V	0.96typ		
		ACIN 200V	0.93typ		
	INRUSH CURRENT		Limited by external resistance		
	LEAKAGE CURRENT[mA]		0.75max (ACIN 240V 60Hz, Io=100%, According to IEC62368-1)		
OUTPUT	VOLTAGE[V]		12	28	48
	CURRENT[A]	✻3	42 (Peak 55)	18 (Peak 24)	10.5 (Peak 14)
	LINE REGULATION[mV]		24max	56max	96max
	LOAD REGULATION[mV]		24max	56max	96max
	RIPPLE[mVp-p]	0 to +100℃ ✻1	120max	180max	250max
		-40 to 0℃ ✻1	150max	200max	300max
	RIPPLE NOISE[mVp-p]	0 to +100℃ ✻1	150max	200max	300max
		-40 to 0℃ ✻1	200max	300max	450max
	TEMPERATURE REGULATION[mV]	0 to +65℃	120max	280max	480max
		-40 to +100℃	240max	560max	960max
	DRIFT[mV]	✻2	40max	90max	180max
	OUTPUT VOLTAGE ADJUSTMENT RANGE[V]		Fixed (TRM pin open), adjustable by external resistor or external signal		
			9.60 - 14.40	22.40 - 33.60	38.40 - 52.80 (-Y1 Option : 38.4 - 57.6)
	OUTPUT VOLTAGE SETTING[V]		11.91 - 12.29	27.56 - 28.44	47.24 - 48.76
PROTECTION CIRCUIT AND OTHERS	OVERCURRENT PROTECTION		Works over 101% of peak current and recovers automatically		
	OVERVOLTAGE PROTECTION[V]		15.00 - 16.80	35.00 - 39.20	55.20 - 64.80 (-Y1 Option : 60.0 - 67.2)
	REMOTE SENSING		Provided		
	REMOTE ON/OFF		Optional (External power supply is required)		
ISOLATION	INPUT-OUTPUT・RC	✻5	AC3,000V 1minute, Cutoff current = 10mA, DC500V 50MΩ min (20±15℃)		
	INPUT-FG		AC2,000V 1minute, Cutoff current = 10mA, DC500V 50MΩ min (20±15℃)		
	OUTPUT・RC-FG	✻5	AC500V 1minute, Cutoff current = 100mA, DC500V 50MΩ min (20±15℃)		
	OUTPUT-RC	✻5	AC100V 1minute, Cutoff current = 100mA, DC100V 10MΩ min (20±15℃)		
ENVIRONMENT	OPERATING TEMP.,HUMID.AND ALTITUDE		-40 to +100℃ (On aluminum base plate), 20 - 95%RH (Non condensing) (Refer to "Derating"), 3,000m (10,000 feet) max		
	STORAGE TEMP.,HUMID.AND ALTITUDE		-40 to +100℃, 20 - 95%RH (Non condensing), 9,000m (30,000 feet) max		
	VIBRATION		10 - 55Hz, 49.0m/s² (5G), 3minutes period, 60minutes each along X, Y and Z axis		
	IMPACT		196.1m/s² (20G), 11ms, once each along X, Y and Z axis		
SAFETY AND NOISE REGULATIONS	AGENCY APPROVALS		UL60950-1, C-UL (CSA60950-1), EN62368-1		
	HARMONIC ATTENUATOR		Complies with IEC61000-3-2 (Class A) ✻4		
OTHERS	CASE SIZE/WEIGHT		117.3×12.7×61.5mm [4.62×0.5×2.42 inches] (W×H×D) / 190g max		
	COOLING METHOD		Conduction cooling (e.g. heat radiation from the aluminum base plate to the attached heat sink)		

✻1 Refer to instruction manual for measuring method of electric characteristics.
✻2 Drift is the change in DC output for an eight hour period after a half-hour warm-up at 25℃, with the input voltage held constant at the rated input/output.
✻3 ( ) means peak current. Avoid operating with peak current continuously. It may cause failure of the components inside the product.
There are limitation of available condition of the peak current, such as peak time, duty etc. (Refer to the instruction manual in detail.)
✻4 Please contact us about another class.
✻5 "RC" is applicable when remote control (optional) is added.

External view

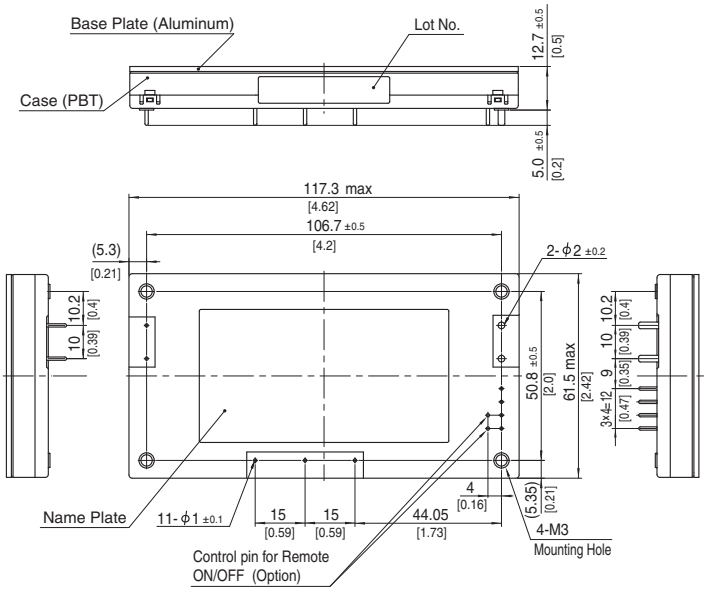

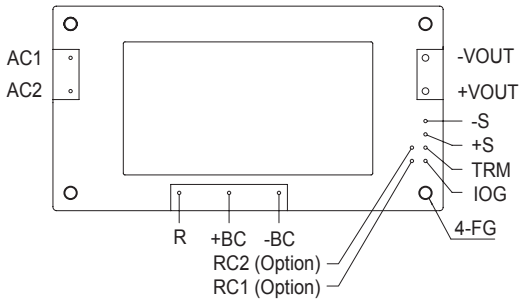

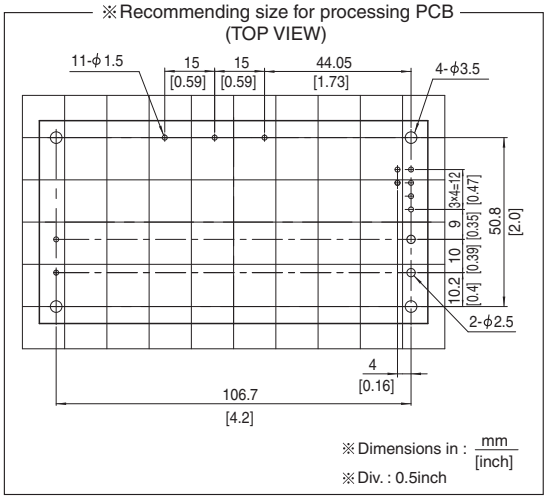

※Tolerance : ±0.3 [±0.012]
※Weight : 190g max
※Dimensions in mm, [ ]=inches
※Mounting hole screwing torque : 0.49N・m (5.0kgf・cm) max

COSEL AC-DC Power Supplies Bus Converter·Power Module Type

TUNS700F

Ordering information

TUN	S	700	F	48	-□
①	②	③	④	⑤	⑥



①Series name
②Single output
③Output wattage
④Universal Input
⑤Output voltage
⑥Optional
T : with Mounting hole (φ3.4 thru)
Y1: Outputvoltage adjustment range ±20% (Only 48V)
R1: with Remote ON/OFF (Negative logic control)
R2: with Remote ON/OFF (Negative logic and Low standby power)
R3: with Remote ON/OFF (Positive logic control)
P : Parallel operation (Output voltage trimming disabled, Remote sensing disabled)

*Avoid short circuit between +BC/R and -BC. It may cause the failure of inside components.
*Keep TRM open, if output voltage adjustment is not necessary.
*If remote sensing is not necessary, connect between +Vout & +S and between -Vout & -S.

MODEL	TUNS700F12	TUNS700F28	TUNS700F48
MAX OUTPUT WATTAGE[W]	700.8	700.0	700.8
DC OUTPUT	12V 58.4A	28V 25A	48V 14.6A

SPECIFICATIONS

	MODEL		TUNS700F12	TUNS700F28	TUNS700F48
INPUT	VOLTAGE[V]		AC85 - 264 1φ		
	CURRENT[A]	ACIN 100V	8.6typ (Io=100%)		
		ACIN 200V	4.1typ (Io=100%)		
	FREQUENCY[Hz]		50/60 (47 - 63)		
	EFFICIENCY[%]	ACIN 100V	83typ	86typ	87typ
		ACIN 200V	86typ	89typ	90typ
	POWER FACTOR (Io=100%)	ACIN 100V	0.96typ		
		ACIN 200V	0.93typ		
	INRUSH CURRENT		Limited by external resistance		
	LEAKAGE CURRENT[mA]		0.75max (ACIN 240V 60Hz, Io=100%, According to IEC62368-1)		
OUTPUT	VOLTAGE[V]		12	28	48
	CURRENT[A]		58.4	25	14.6
	LINE REGULATION[mV]		24max	56max	96max
	LOAD REGULATION[mV]		24max	56max	96max
	RIPPLE[mVp-p]	0 to +100℃ *1	120max	180max	250max
		-40 to 0℃ *1	150max	200max	300max
	RIPPLE NOISE[mVp-p]	0 to +100℃ *1	150max	200max	300max
		-40 to 0℃ *1	200max	300max	450max
	TEMPERATURE REGULATION[mV]	0 to +65℃	120max	280max	480max
		-40 to +100℃	240max	560max	960max
	DRIFT[mV]	*2	40max	90max	180max
	OUTPUT VOLTAGE ADJUSTMENT RANGE[V]		Fixed (TRM pin open), adjustable by external resistor or external signal		
			9.60 - 14.40	22.40 - 33.60	38.40 - 52.80 (-Y1 Option : 38.4 - 57.6)
	OUTPUT VOLTAGE SETTING[V]		11.91 - 12.29	27.56 - 28.44	47.24 - 48.76
PROTECTION CIRCUIT AND OTHERS	OVERCURRENT PROTECTION		Works over 105% of rating and recovers automatically		
	OVERVOLTAGE PROTECTION[V]		15.00 - 16.80	35.00 - 39.20	55.20 - 64.80 (-Y1 Option : 60.0 - 67.2)
	REMOTE SENSING		Provided		
	REMOTE ON/OFF		Optional (External power supply is required)		

MODEL	TUNS700F12-P	TUNS700F28-P	TUNS700F48-P
MAX OUTPUT WATTAGE[W]	700.8	700.0	700.8
DC OUTPUT	12V 58.4A	28V 25A	48V 14.6A

SPECIFICATIONS

	MODEL		TUNS700F12-P	TUNS700F28-P	TUNS700F48-P
INPUT	VOLTAGE[V]		AC85 - 264 1φ		
	CURRENT[A]	ACIN 100V	8.6typ (Io=100%)		
		ACIN 200V	4.1typ (Io=100%)		
	FREQUENCY[Hz]		50/60 (47 - 63)		
	EFFICIENCY[%]	ACIN 100V	83typ	86typ	87typ
		ACIN 200V	86typ	89typ	90typ
	POWER FACTOR (Io=100%)	ACIN 100V	0.96typ		
		ACIN 200V	0.93typ		
	INRUSH CURRENT		Limited by external resistance		
	LEAKAGE CURRENT[mA]		0.75max (ACIN 240V 60Hz, Io=100%, According to IEC62368-1)		
OUTPUT	VOLTAGE[V]		12	28	48
	CURRENT[A]		58.4	25	14.6
	VOLTAGE ACCURACY[%]		+5, -3	+5, -3	+5, -3
	RIPPLE[mVp-p]	0 to +100℃ *1	240max	360max	600max
		-40 to 0℃ *1	300max	400max	700max
		0 to +30% Load *1	360max	540max	900max
	RIPPLE NOISE[mVp-p]	0 to +100℃ *1	300max	400max	700max
		-40 to 0℃ *1	400max	600max	1000max
		0 to +30% Load *1	450max	600max	1000max
PROTECTION CIRCUIT AND OTHERS	OVERCURRENT PROTECTION		Works over 105% of rating and recovers automatically		
	OVERVOLTAGE PROTECTION[V]		15.00 - 16.80	35.00 - 39.20	55.20 - 64.80
	REMOTE ON/OFF		Optional (External power supply is required)		

GENERAL SPECIFICATIONS

ISOLATION	INPUT-OUTPUT · RC	*4	AC3,000V 1minute, Cutoff current = 10mA, DC500V 50MΩ min (20±15℃)
	INPUT-FG		AC2,000V 1minute, Cutoff current = 10mA, DC500V 50MΩ min (20±15℃)
	OUTPUT · RC-FG	*4	AC500V 1minute, Cutoff current = 100mA, DC500V 50MΩ min (20±15℃)
	OUTPUT-RC	*4	AC100V 1minute, Cutoff current = 100mA, DC100V 10MΩ min (20±15℃)
ENVIRONMENT	OPERATING TEMP.,HUMID.AND ALTITUDE		-40 to +100℃ (On aluminum base plate), 20 - 95%RH (Non condensing) (Refer to "Derating"), 3,000m (10,000 feet) max
	STORAGE TEMP.,HUMID.AND ALTITUDE		-40 to +100℃, 20 - 95%RH (Non condensing), 9,000m (30,000 feet) max
	VIBRATION		10 - 55Hz, 49.0m/s² (5G), 3minutes period, 60minutes each along X, Y and Z axis
	IMPACT		196.1m/s² (20G), 11ms, once each along X, Y and Z axis
SAFETY AND NOISE REGULATIONS	AGENCY APPROVALS		UL60950-1, C-UL (CSA60950-1), EN62368-1
	HARMONIC ATTENUATOR		Complies with IEC61000-3-2 (Class A) *3
OTHERS	CASE SIZE/WEIGHT		117.3×12.7×61.5mm [4.62×0.5×2.42 inches] (W×H×D) / 190g max
	COOLING METHOD		Conduction cooling (e.g. heat radiation from the aluminum base plate to the attached heat sink)

*1 Refer to instruction manual for measuring method of electric characteristics.
*2 Drift is the change in DC output for an eight hour period after a half-hour warm-up at 25℃, with the input voltage held constant at the rated input/output.
*3 Please contact us about another class.
*4 "RC" is applicable when remote control (optional) is added.

External view

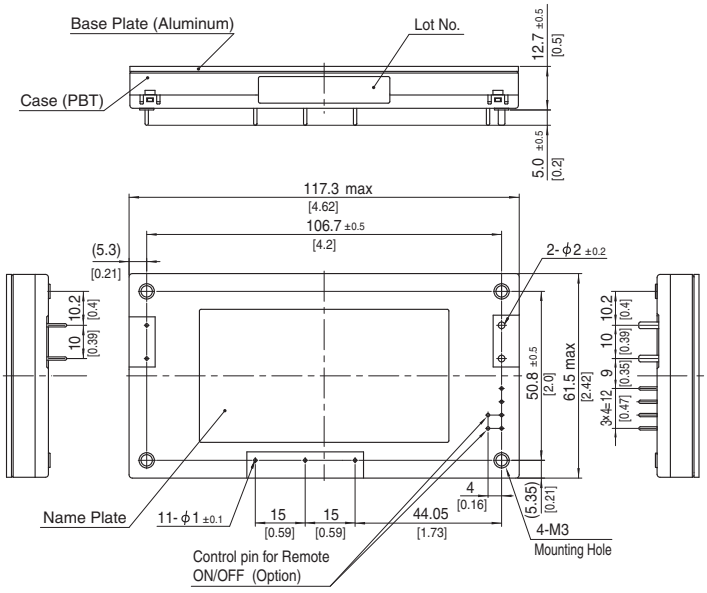

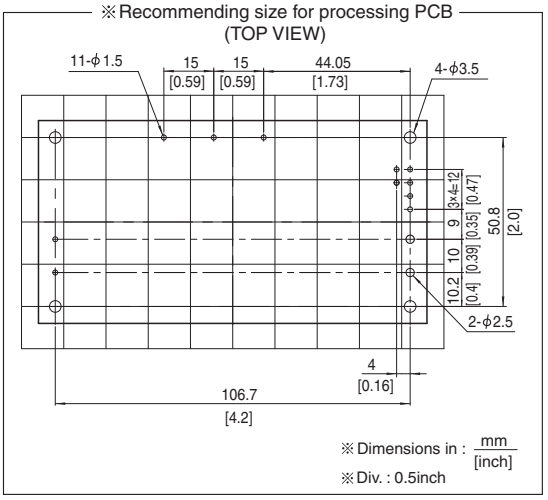

※Tolerance : ±0.3 [±0.012]
※Weight : 190g max
※Dimensions in mm, [ ]=inches
※Mounting hole screwing torque : 0.49N・m (5.0kgf・cm) max

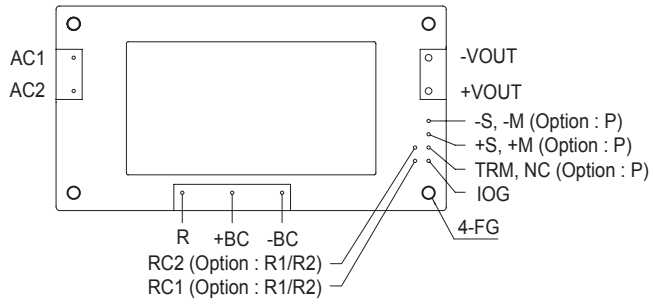

COSEL AC-DC Power Supplies Bus Converter・Power Module Type

TUNS1200F

Ordering information

TUN	S	1200	F	48	-□
①	②	③	④	⑤	⑥

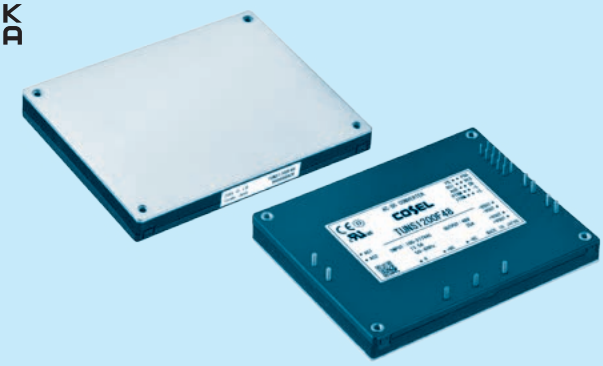

①Series name
②Single output
③Output wattage
④Universal Input
⑤Output voltage
⑥Optional
T : with Mounting hole (φ3.4 thru)
Y1: Outputvoltage adjustment range ±20% (Only 48V)
R3: with Remote ON/OFF (Positive logic control)
N1: Auto restart from thermal protection

✻Avoid short circuit between +BC/R and -BC. It may cause the failure of inside components.
✻Keep VTRM open, if output voltage adjustment is not necessary.
✻Keep ITRM open, if output current adjustment is not necessary.
✻If remote sensing is not necessary, connect between +Vout & +S and between -Vout & -S.

MODEL	TUNS1200F12	TUNS1200F28	TUNS1200F48	TUNS1200F65
MAX OUTPUT WATTAGE[W]	1008	1204	1200	1202.5
DC OUTPUT	12V 84A	28V 43A	48V 25A	65V 18.5A

SPECIFICATIONS

	MODEL		TUNS1200F12	TUNS1200F28	TUNS1200F48	TUNS1200F65
INPUT	VOLTAGE[V]		AC85 - 305V 1φ			
	CURRENT[A]	ACIN 100V	12typ	14typ	14typ	14typ
		ACIN 200V	5.9typ	6.7typ	6.6typ	6.7typ
	FREQUENCY[Hz]		50/60 (47 - 63)			
	EFFICIENCY[%]	ACIN 100V	85typ	89typ	90typ	89typ
		ACIN 200V	87typ	91typ	92typ	91typ
	POWER FACTOR (Io=100%)	ACIN 100V	0.98typ			
		ACIN 200V	0.95typ			
	INRUSH CURRENT		Limited by external resistance			
	LEAKAGE CURRENT[mA]		0.5max (ACIN 240V 60Hz, Io=100%, According to IEC60601-1)			
OUTPUT	VOLTAGE[V]		12	28	48	65
	CURRENT[A]		84	43	25	18.5
	LINE REGULATION[mV]		24max	56max	96max	130max
	LOAD REGULATION[mV]		24max	56max	96max	130max
	RIPPLE[mVp-p]	0 to +100℃ ✻1	150max	180max	250max	350max
		-40 to 0℃ ✻1	180max	200max	300max	400max
	RIPPLE NOISE[mVp-p]	0 to +100℃ ✻1	180max	200max	300max	400max
		-40 to 0℃ ✻1	200max	300max	450max	450max
	TEMPERATURE REGULATION[mV]	0 to +80℃ ✻1	120max	280max	480max	650max
		-40 to +100℃ ✻1	240max	560max	960max	1300max
	DRIFT[mV]	✻2	40max	90max	180max	240max
	OUTPUT VOLTAGE ADJUSTMENT RANGE[V]		Fixed (VTRM pin open), adjustable by external resistor or external signal			
			9.60 - 14.40	22.40 - 33.60	38.40 - 52.80 (Y1:38.4 - 57.6)	52.00 - 78.00
	OUTPUT VOLTAGE SETTING[V]		11.91 - 12.29	27.56 - 28.44	47.24 - 48.76	63.96 - 66.04
PROTECTION CIRCUIT AND OTHERS	OVERCURRENT PROTECTION		Works over 105% of rating and recovers automatically			
	OVERVOLTAGE PROTECTION[V]		15.00 - 16.80	35.00 - 39.20	55.20 - 60.00 (Y1:60.0 - 67.2)	81.25 - 91.00
	REMOTE SENSING		Provided			
	REMOTE ON/OFF		Provided			
ISOLATION	INPUT-OUTPUT		AC3,000V 1minute, Cutoff current = 10mA, DC500V 50MΩ min (20±15℃) 2MOOP			
	INPUT-FG		AC2,000V 1minute, Cutoff current = 10mA, DC500V 50MΩ min (20±15℃) 1MOOP			
	OUTPUT-FG		TUNS1200F12/28/48 : AC500V 1minute, Cutoff current = 100mA, DC500V 50MΩ min (20±15℃) TUNS1200F65 : AC1,200V 1minute, Cutoff current = 10mA, DC500V 50MΩ min (20±15℃) 1MOOP			
	OUTPUT-RC, PG		AC100V 1minute, Cutoff current = 100mA, DC100V 10MΩ min (20±15℃)			
ENVIRONMENT	OPERATING TEMP.,HUMID.AND ALTITUDE		-40 to +100℃ (On aluminum base plate), 20 - 95%RH (Non condensing) (Refer to DERATING CURVE)			
	STORAGE TEMP.,HUMID.AND ALTITUDE		-40 to +100℃, 20 - 95%RH (Non condensing), 9,000m (30,000 feet) max			
	VIBRATION		10 - 55Hz, 49.0m/s² (5G), 3minutes period, 60minutes each along X, Y and Z axis			
	IMPACT		196.1m/s² (20G), 11ms, once each along X, Y and Z axis			
SAFETY AND NOISE REGULATIONS	AGENCY APPROVALS		UL62368-1, EN62368-1, C-UL (equivalent to CAN/CSA-C22.2 No.62368-1), ANSI/AAMI ES60601-1, EN60601-1 3rd, C-UL (equivalent to CAN/CSA-C22.2 No.60601-1), Complies with IEC60601-1-2 4th			
	HARMONIC ATTENUATOR		Complies with IEC61000-3-2 (Class A) ✻3			
OTHERS	CASE SIZE/WEIGHT		117.3×12.7×86.8mm [4.62×0.5×3.42 inches] (W×H×D) / 280g max			
	COOLING METHOD		Conduction cooling (e.g. heat radiation from the aluminum base plate to the attached heat sink)			

✻1 Refer to instruction manual for measuring method of electric characteristics.
✻2 Drift is the change in DC output for an eight hour period after a half-hour warm-up at 25℃, with the input voltage held constant at the rated input/output.
✻3 Please contact us about another class.

External view

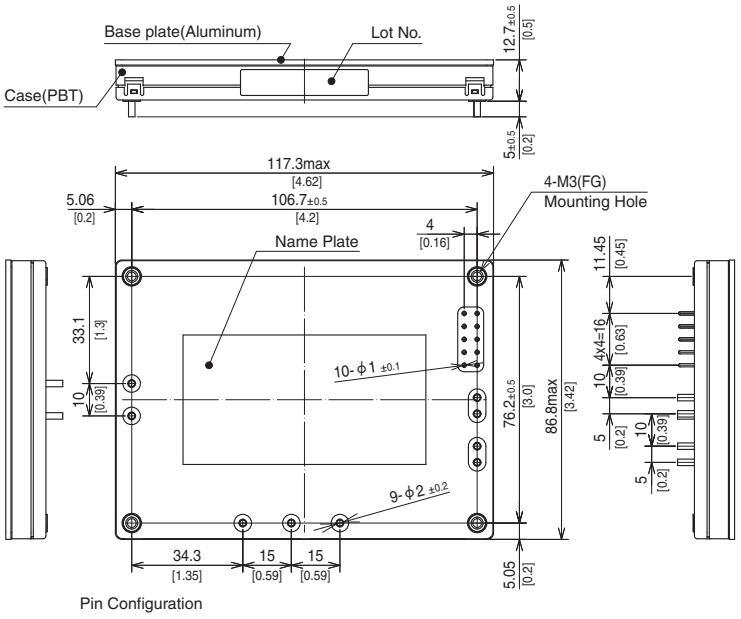

Pin Configuration

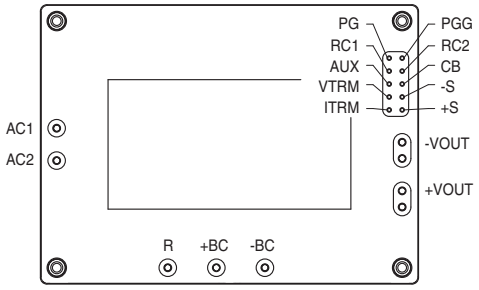

Bottom View

※Recommending size for processing PCB
(TOP VIEW)

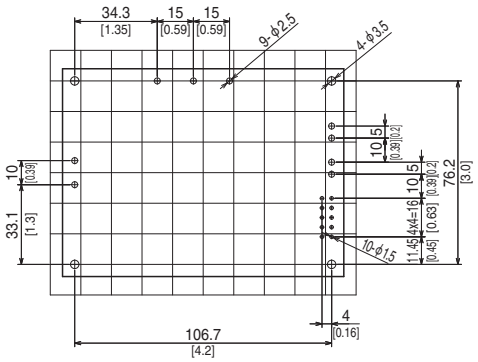

※ Dimensions in : mm / [inch]
※ Div. : 0.5inch

※ Tolerance : ±0.3 [±0.012]
※ Weight : 280g max
※ Dimensions in mm, [ ]=inches
※ Mounting hole screwing torque : 0.49N・m (5.0kgf・cm) max

Pin Configuration

● TUNS50F

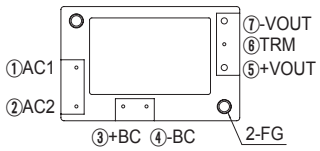

∗bottom view

No.		Pin Connection	Function
TUNS50F	TUNS100F		
①	①	AC1	AC input
②	②	AC2	
③	③	+BC	+BC output
④	④	-BC	-BC output
⑤	⑤	+VOUT	+DC output
⑦	⑨	-VOUT	-DC output
–	⑧	-S	Remote sensing (-)
–	⑥	+S	Remote sensing (+)
⑥	⑦	TRM	Adjustment of output voltage
–	–	FG	Mounting hole (FG)

● TUNS100F

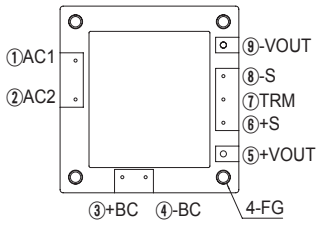

∗bottom view

● TUNS300F/TUNS500F/TUNS700F

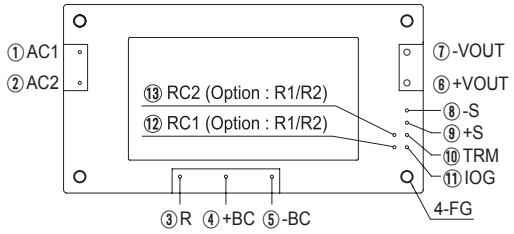

∗bottom view

No.	Pin Connection	Function
①	AC1	AC input
②	AC2	
③	R	External resistor for inrush current protection
④	+BC	+BC output
⑤	–BC	–BC output
⑥	+VOUT	+DC output
⑦	–VOUT	–DC output
⑧	–S	Remote sensing (–)
⑨	+S	Remote sensing (+)
⑩	TRM	Adjustment of output voltage
⑪	IOG	Inverter operation monitor
⑫	RC1	Remote ON/OFF (Option)
⑬	RC2	
—	FG	Mounting hole (FG)

● TUNS700F□□-P (OPTION)

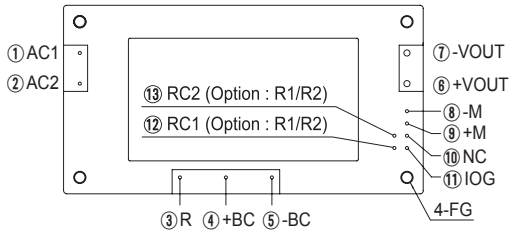

∗bottom view

No.	Pin Connection	Function
⑧	–M	Output voltage monitor terminal
⑨	+M	
⑩	NC	No connection

Other than the above are the same as standard products.

● TUNS1200F

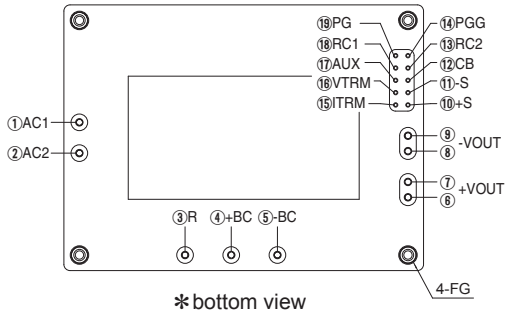

∗bottom view

No.	Pin Connection	Function
①	AC1	AC input
②	AC2	
③	R	External resistor for inrush current protection
④	+BC	+BC output
⑤	-BC	-BC output
⑥⑦	+VOUT	+DC output
⑧⑨	-VOUT	-DC output
⑩	+S	Remote sensing (+)
⑪	-S	Remote sensing (-)
⑫	CB	Current balance
⑬	RC2	Remote ON/OFF ground
⑭	PGG	Power good output ground
⑮	ITRM	Adjustment of output current
⑯	VTRM	Adjustment of output voltage
⑰	AUX	Auxiliary output
⑱	RC1	Remote ON/OFF
⑲	PG	Power good output
—	FG	Mounting hole (FG)

Implementation • Mounting Method

Mounting method

■Use with the conduction cooling (e.g. heat dissipation from the aluminum base plate to the attached heat sink).
■Use a heat sink that larger than the power supply and has a large thickness so that the alminum base plate can be cooled uniformly.
■The unit can be mounted in any direction. When two or more power supplies are used side by side, position them with proper intervals to allow enough air ventilation. Aluminum base plate temperature of each power supply should not exceed the temperature range shown in "derating".
■Avoid placing the AC input line pattern layout underneath the unit. It will increase the line conducted noise. Make sure to leave an ample distance between the line pattern layout and the unit. Also avoid placing the DC output line pattern underneath the unit because it may increase the output noise. Lay out the pattern away from the unit.
■Avoid placing the signal line pattern layout underneath the unit because the power supply might become unstable. Lay out the pattern away from the unit.
■High-frequency noise radiates directly from the unit to the atmosphere. Therefore, design the shield pattern on the printed circuit board and connect it to FG or -BC.The shield pattern prevents noise radiation.
■When a heat sink cannot be fixed on the base plate side, order the power module with "-T"option. A heat sink can be mounted by affixing a M3 tap on the heat sink. Please make sure a mounting hole will be connected to a grounding capacitor CY.

	Mounting hole
Standard	M3 tapped
Optional : -T	φ3.4 thru

Stress onto the pins

■When too much stress is applied to the pins may damage internal connections. Avoid applying stress in excess of that shown in right figure.
■The pins are soldered onto the internal PCB.
Therefore, Do not bend or pull the leads with excessive force.
■Mounting hole diameter of PCB should be 3.5mm to reduce the stress to the pins.
■Fix the unit on PCB (fixing fittings) by screws to reduce the stress to the pins. Be sure to mount the unit first, then solder the unit.

● TUNS50F/100F/300F/500F/700F

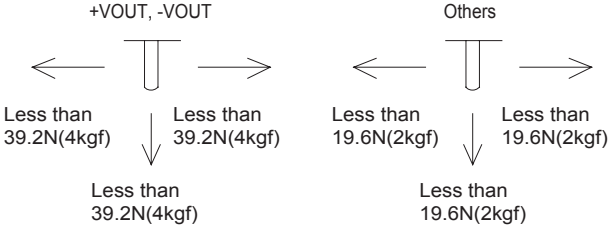

● TUNS1200F

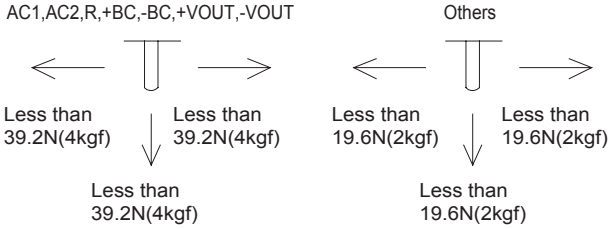

Soldering temperature

■Flow soldering : 260℃ for up to 15 seconds.
■Soldering iron (26W) : 450℃for up to 5 seconds.

Derating

Input voltage derating curve

● TUNS50F/100F

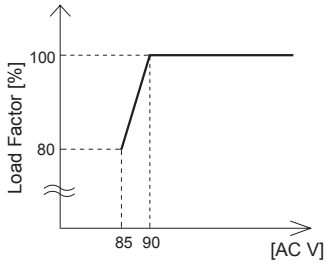

● TUNS700F/1200F

✻TUNS1200F12 has no input voltage derating.

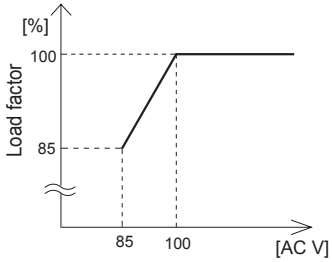

● TUNS300F/500F

✻TUNS300F/500F has no input voltage derating.

Derating

Output voltage derating curve

■Use the power modules with conduction cooling (e.g. heat dissipation from the aluminum base plate to the attached heat sink). Below shows the derating curves with respect to the aluminum base plate temperature. Note that operation within the hatched areas will cause a significant level of ripple and ripple noise.

■Please measure the temperature on the aluminum base plate edge side when you cannot measure the temperature of the center part of the aluminum base plate.In this case, please take 5deg temperature margin from the derating characteristics shown in below. Please reduce the temperature fluctuation range as much as possible when the up and down of the temperature are frequently generated. Contact us for more information on cooling methods.

● TUNS50F/100F

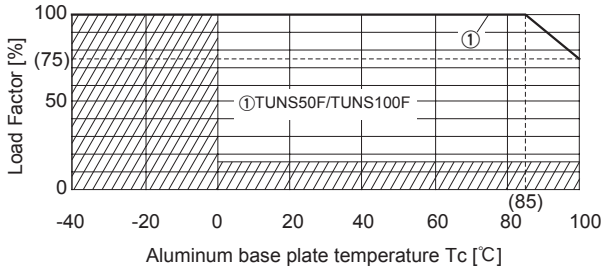

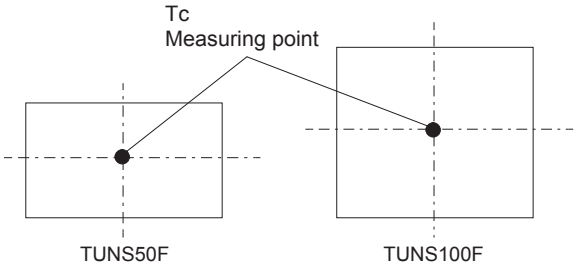

● TUNS300F

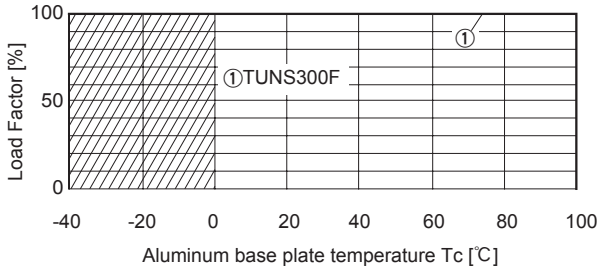

● TUNS500F

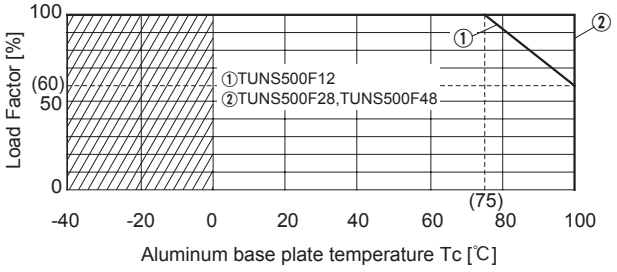

● TUNS700F

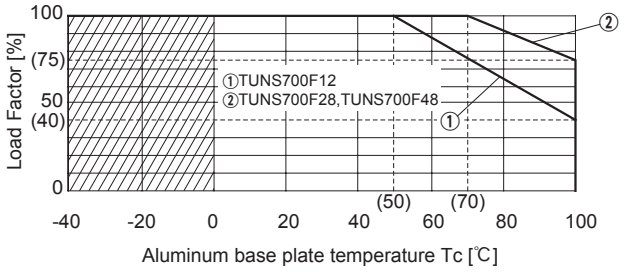

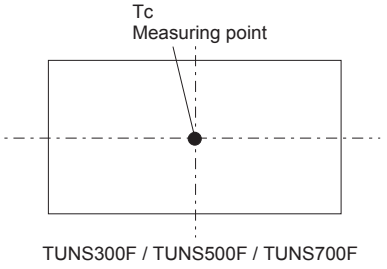

● TUNS1200F

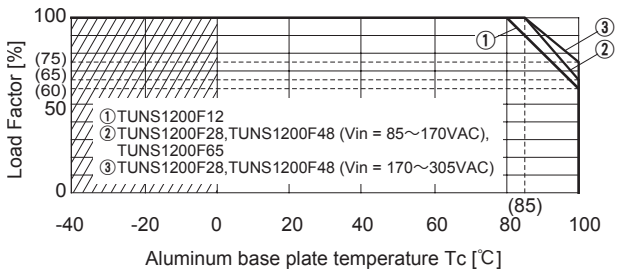

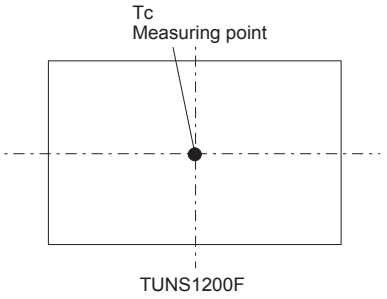

Instruction Manual

◆ It is neccessary to read the “Instruction Manual” and “Before using our product” before you use our product.

Instruction Manual https://www.cosel.co.jp/redirect/catalog/en/TUNS/
Before using our product https://en.cosel.co.jp/technical/caution/index.html

TUNS NOTICE

Basic Characteristics Data

Model	Circuit method	Switching frequency [kHz]	Input current [A] ∗1	Inrush current protection circuit	PCB/Pattern			Series/Parallel operation availability	
					Material	Single sided	Double sided	Series operation	Parallel operation
TUNS50F	Active filter	80-600	0.67	Thermistor	Aluminum	Yes		Yes	∗2
	Flyback converter	100-300							
TUNS100F	Active filter	80-600	1.3	Thermistor	Aluminum	Yes		Yes	∗2
	Forward converter	300							
TUNS300F	Active filter	100	3.6	SCR	Aluminum	Yes		Yes	∗2
	Half-bridge converter	400							
TUNS500F	Active filter	100	6.0	SCR	Aluminum	Yes		Yes	∗2
	Half-bridge converter	400							
TUNS700F	Active filter	100	8.6	SCR	Aluminum	Yes		Yes	∗2
	Half-bridge converter	400							
TUNS1200F	Active filter	100	14	SCR	Aluminum	Yes		Yes	Yes
	Full-bridge converter	400							

∗1 The value of input current is at ACIN 100V and rated load.
∗2 Refer to instruction manual.