AC-DC Power Supplies Medical Type

Medical electric equipment | World wide | Cost Effective | Safety Approvals | EMI | Inrush current limiting | OCP | OVP

UMA-series

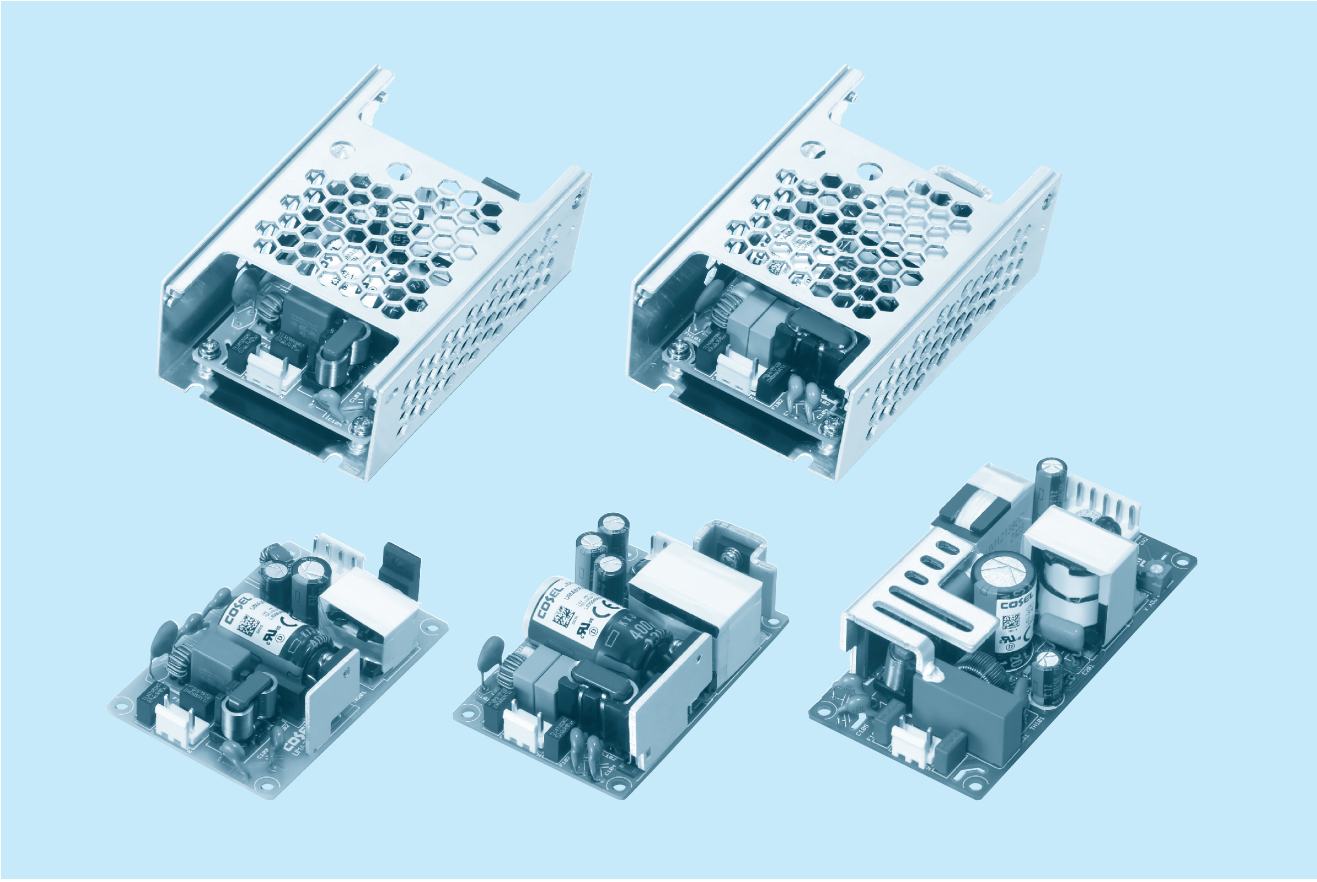

Feature

For medical electric equipment
Medical Isolation Grade 2MOPP
4kV isolation
Suitable for BF application
Low leakage current
Power factor correction (UMA120F)
UMA30F, UMA60F : 2″×3″ standard footprint
UMA120F : 2″×4″ standard footprint
Economical design

Safety agency approvals

ANSI/AAMI ES60601-1, EN60601-1 3rd,
C-UL (CAN/CSA-C22.2 No.60601-1),
UL62368-1, EN62368-1,
C-UL (CAN/CSA-C22.2 No.62368-1),
Complies with EN60335

CE marking

Low Voltage Directive
RoHS Directive

UKCA marking

Electrical Equipment Safety Regulations
RoHS Regulations

5-year warranty (See Instruction Manual)

EMI

Complies with CISPR11-B, CISPR32-B, EN55011-B,
EN55032-B, FCC Part 15-B, FCC Part 18-B

EMS Compliance : EN61204-3, EN61000-6-2
IEC60601-1-2 (2014),
EN60601-1-2 (2015)

EN61000-4-2
EN61000-4-3
EN61000-4-4
EN61000-4-5
EN61000-4-6
EN61000-4-8
EN61000-4-11

COSEL AC-DC Power Supplies Medical Type

UMA30F

Ordering information

UM	A	30	F	-□	-□
①	②	③	④	⑤	⑥

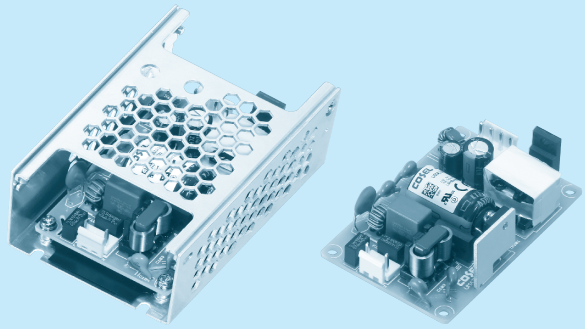

①Series name
②Single output
③Output wattage
④Universal input
⑤Output voltage
⑥Optional *7
E : IEC Class II
T : Terminal block
SN: with Chassis & cover
Y : with Potentiometer

*Make sure necessary tests will be carried out on your end equipment with the power supply installed in accordance with any required EMC/EMI regulations.

MODEL	UMA30F-5	UMA30F-12	UMA30F-15	UMA30F-24	UMA30F-36	UMA30F-48
MAX OUTPUT WATTAGE[W]	15	30	30	31.2	30.6	31.2
DC OUTPUT	5V 3A	12V 2.5A	15V 2A	24V 1.3A	36V 0.85A	48V 0.65A

SPECIFICATIONS

	MODEL		UMA30F-5	UMA30F-12	UMA30F-15	UMA30F-24	UMA30F-36	UMA30F-48
INPUT	VOLTAGE[V]		AC85 - 264 1φ					
	CURRENT[A]	ACIN 115V	0.35	0.7				
		ACIN 230V	0.15	0.3				
	FREQUENCY[Hz]		50/60 (47-63)					
	EFFICIENCY[%]	ACIN 115V	81typ	86typ	86typ	88typ	88typ	88typ
		ACIN 230V	80typ	87typ	87typ	89typ	89typ	89typ
	INRUSH CURRENT[A]	ACIN 115V	25typ					
		ACIN 230V	50typ					
	LEAKAGE CURRENT[uA]	ACIN 264V	200max					
	TOUCH CURRENT[uA]	ACIN 264V	75max					
OUTPUT	VOLTAGE[V]		5	12	15	24	36	48
	CURRENT[A]		3	2.5	2	1.3	0.85	0.65
	WATTAGE[W]		15	30	30	31.2	30.6	31.2
	LINE REGULATION[mV] *1		20max	48max	60max	96max	144max	192max
	LOAD REGULATION[mV] *1		100max	120max	120max	150max	240max	240max
	RIPPLE NOISE [mVp-p] *2	Io=100%	150 (Bandwidth 20MHz)					
	TEMPERATURE REGULATION[mV]	0~+50℃	100max	120max	150max	240max	360max	480max
	START-UP TIME[ms]	ACIN 115V ACIN 230V	40typ					
	HOLD-UP TIME[ms]	ACIN 115V	20typ					
		ACIN 230V	100typ					
	OUTPUT VOLTAGE ADJUSTMENT RANGE[V]		Fixed ("Y"option is available for adjusting output voltage between ±10%)					
	OUTPUT VOLTAGE SETTING[V]		4.90 to 5.30	11.50 to 12.50	14.40 to 15.60	23.00 to 25.00	34.50 to 37.50	46.00 to 50.00
PROTECTION CIRCUIT AND OTHERS	OVERCURRENT PROTECTION [A]		Works over 105% of rating and recovers automatically					
	OVERVOLTAGE PROTECTION[V]		5.75 to 7.00	13.80 to 16.80	17.25 to 21.00	27.60 to 33.60	41.40 to 50.40	55.20 to 67.20
ISOLATION	INPUT-OUTPUT		AC4,000V 1minute, DC500V 100MΩ min (At Room Temperature) 2MOPP					
	INPUT-FG		AC2,000V 1minute, DC500V 100MΩ min (At Room Temperature) 1MOPP					
	OUTPUT-FG		AC2,000V 1minute, DC500V 100MΩ min (At Room Temperature) 1MOPP					
ENVIRONMENT	OPERATING TEMP.,HUMID. *3		-20 to +70℃, 20 - 90%RH (Non condensing)					
	STORAGE TEMP.,HUMID.		-20 to +75℃, 20 - 90%RH (Non condensing)					
	VIBRATION		10 - 55Hz, 19.6m/s^2 (2G) , 3minutes period, 60minutes each along X, Y and Z axis					
	IMPACT		196.1m/s^2 (20G) , 11ms, once each X, Y and Z axis					
SAFETY AND EMC	AGENCY APPROVALS		ANSI/AAMI ES60601-1, EN60601-1 3rd, C-UL (equivalent to CAN/CSA-C22.2 No.60601-1) , UL62368-1, EN62368-1, C-UL (equivalent to CAN/CSA-C22.2 No.62368-1) , Complies with EN60335-1					
	EMC EMISSION		Complies with CISPR11-B, CISPR32-B, EN55011-B, EN55032-B, FCC Part 15-B, FCC Part 18-B					
	EMC IMMUNITY		Complies with EN61000-4-2, 3, 4, 5, 6, 8, 11					
	HARMONIC ATTENUATOR *4		Complies with IEC61000-3-2 (Class A) No built-in active PFC					
OTHERS	CASE SIZE/WEIGHT *5		50.8×21.7×76.2mm [2.0×0.85×3.0 inches] (W×H×D) / 80g max					
	COOLING METHOD		Convection					
WARRANTY	WARRANTY *6		5 years (subject to the operating conditions)					

*1 Consult us about dynamic load and input response. Measure the output voltage by using the average mode of the tester to deal with the burst operation at low (Io=0~20%typ) load.
*2 This is the result of measurement of the testing board with capacitors of 47μF and 0.1μF placed at 150 mm from the output terminals by a 20MHz oscilloscope or a ripple-noise meter equivalent to Keisoku-GikenRM104.
When the load factor is low (Io=0~20%typ), the switching power loss is reduced by burst operation, which will cause ripple noise to go beyond the specifications.
*3 Output power derating is required. Refer to "Derating"
*4 Please contact us about another class. When two or more units are operating it may not comply with the IEC61000-3-2. Please contact us for details.
*5 Dimensions below PCB are not included.
*6 Consult us about details.
*7 The listed options may affect the published standard specifications. Please contact us for detailed product specifications and safety approvals.
* All parameters not specially mentioned are measured at ACIN 230V, rated load and 25℃ of ambient temperature.
* Do not use the power supply in overcurrent conditions or in unspecified input voltage ranges. Otherwise the internal components may be damaged.
* Parallel operation is not possible with this model.
* Acoustic noise may be heard from the power supply when used for pulse load.

November 27, 2024

Block diagram

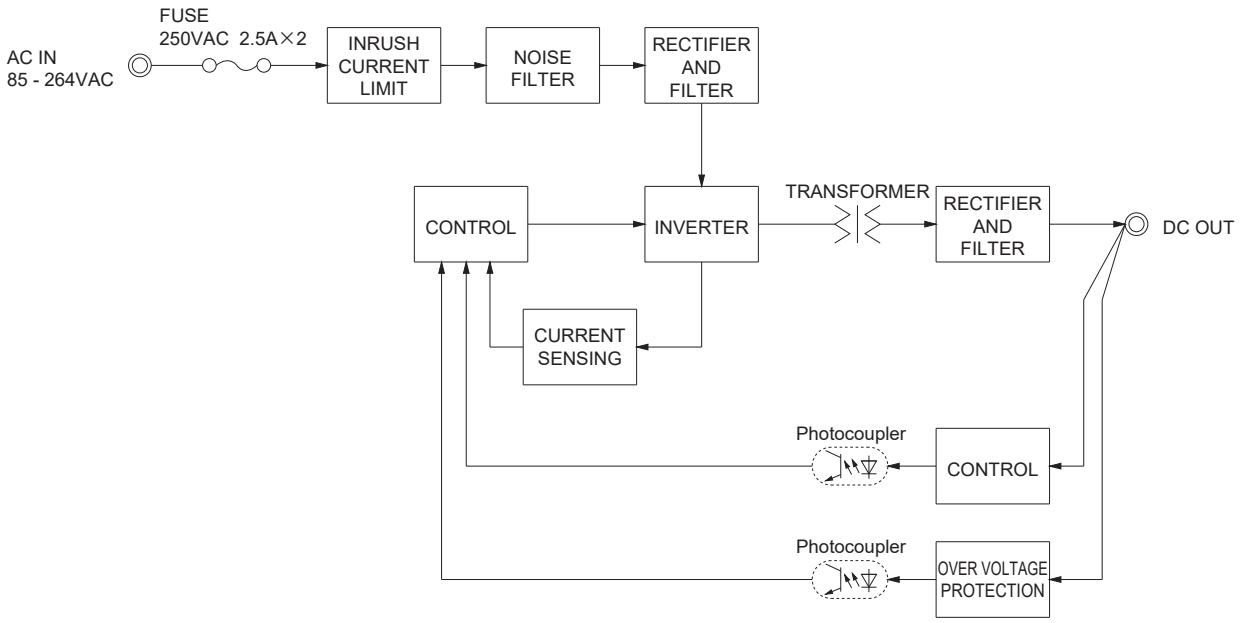

External view

Standard type

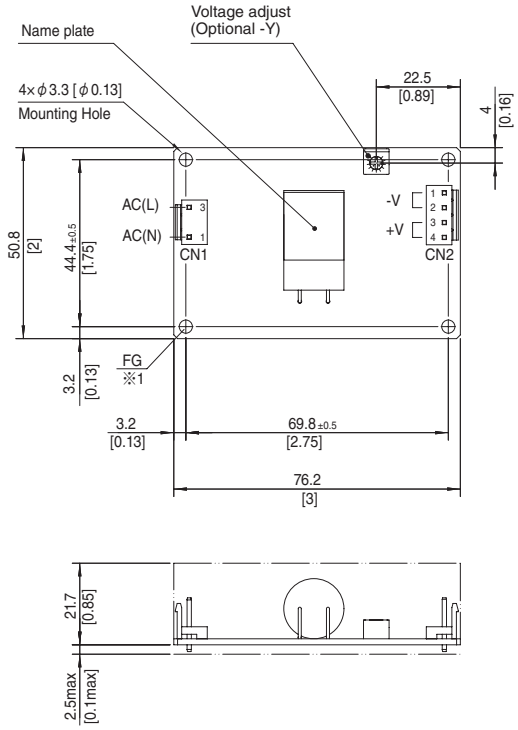

Chassis and cover type

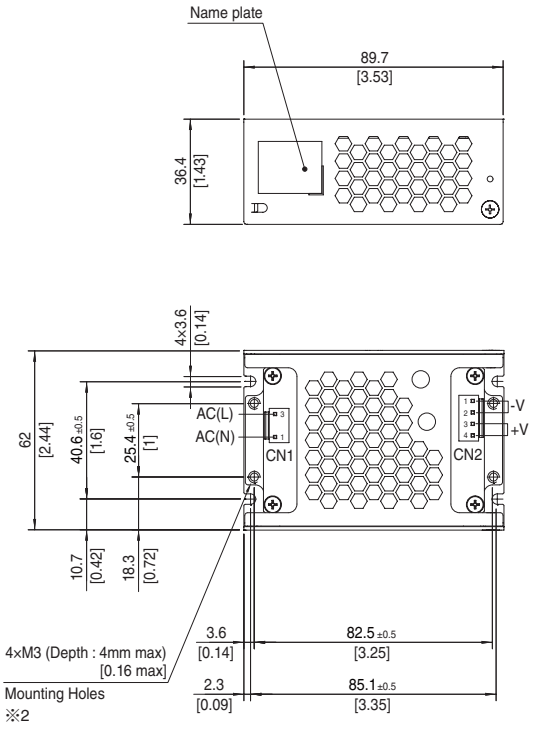

Mating connector and terminal of CN1, CN2

I/O Connector		Mating Connector	Terminal	Mfr.
CN1	B2P3-VH	VHR-3N	Reel : SVH-21T-P1.1 Loose piece : BVH-21T-P1.1	J.S.T.
CN2	B4P-VH	VHR-4N	Reel : SVH-21T-P1.1 Loose piece : BVH-21T-P1.1	J.S.T.

<Pin Assignments>

CN1

Pin No.	Input
1	AC(N)
2	
3	AC(L)

CN2

Pin No.	Output
1, 2	-V
3, 4	+V

※ Dimensions in mm, [ ] =inches
※ Tolerance : ±1 [±0.04]
※ Weight : 80g max (with Chassis and cover 130g max)
※ PCB Material/thickness : CEM-3/1.6 [0.06]
※1 The mounting hole is for FG connection.
The mounting hole in the -E option is not for FG connection.
※2 Mounting torque : 0.49N･m max

COSEL AC-DC Power Supplies Medical Type

UMA60F

Ordering information

UM	A	60	F	-□	-□
①	②	③	④	⑤	⑥

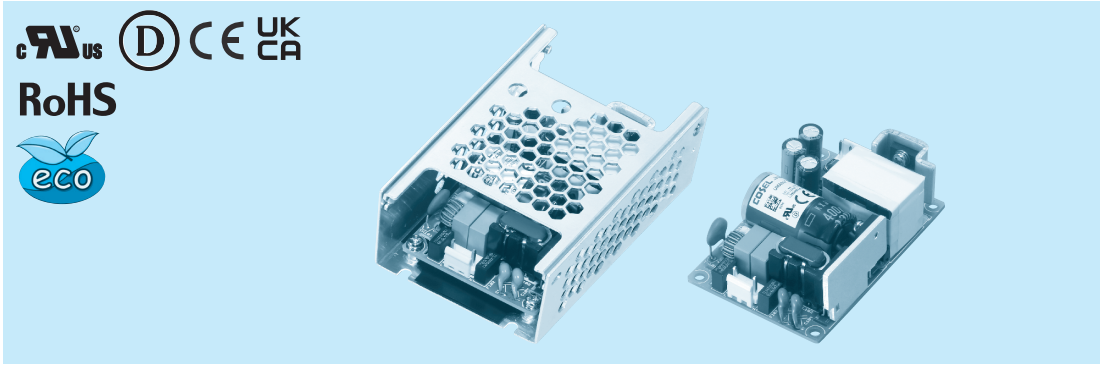

①Series name
②Single output
③Output wattage
④Universal input
⑤Output voltage
⑥Optional *7
E : IEC Class II
T : Terminal block
SN: with Chassis & cover
Y : with Potentiometer

*Make sure necessary tests will be carried out on your end equipment with the power supply installed in accordance with any required EMC/EMI regulations.

MODEL	UMA60F-5	UMA60F-7R5	UMA60F-12	UMA60F-15	UMA60F-24	UMA60F-36	UMA60F-48
MAX OUTPUT WATTAGE[W]	30	41.25	54	52.5	60	61.2	60
DC OUTPUT	5V 6A	7.5V 5.5A	12V 4.5A	15V 3.5A	24V 2.5A	36V 1.7A	48V 1.25A

SPECIFICATIONS

	MODEL		UMA60F-5	UMA60F-7R5	UMA60F-12	UMA60F-15	UMA60F-24	UMA60F-36	UMA60F-48
INPUT	VOLTAGE[V]		AC85 - 264 1φ						
	CURRENT[A]	ACIN 115V	0.7	1.0	1.4				
		ACIN 230V	0.3	0.5	0.7				
	FREQUENCY[Hz]		50/60 (47-63)						
	EFFICIENCY[%]	ACIN 115V	80typ	84typ	87typ	86typ	88typ	89typ	89typ
		ACIN 230V	80typ	85typ	88typ	87typ	90typ	91typ	91typ
	INRUSH CURRENT[A]	ACIN 115V	25typ						
		ACIN 230V	50typ						
	LEAKAGE CURRENT[uA]	ACIN 264V	200max						
	TOUCH CURRENT[uA]	ACIN 264V	75max						
OUTPUT	VOLTAGE[V]		5	7.5	12	15	24	36	48
	CURRENT[A]		6	5.5	4.5	3.5	2.5	1.7	1.25
	WATTAGE[W]		30	41.25	54	52.5	60	61.2	60
	LINE REGULATION[mV] *1		20max	36max	48max	60max	96max	144max	192max
	LOAD REGULATION[mV] *1		100max	120max	120max	120max	150max	240max	240max
	RIPPLE NOISE [mVp-p] *2	Io=100%	150 (Bandwidth 20MHz)						
	TEMPERATURE REGULATION[mV]	0~+50℃	100max	100max	120max	180max	240max	360max	480max
	START-UP TIME[ms]	ACIN 115V	40typ						
		ACIN 230V							
	HOLD-UP TIME[ms]	ACIN 115V	20typ						
		ACIN 230V	100typ						
	OUTPUT VOLTAGE ADJUSTMENT RANGE[V]		Fixed ("Y"option is available for adjusting output voltage between ±10%)						
	OUTPUT VOLTAGE SETTING[V]		4.90 to 5.30	7.20 to 7.80	11.50 to 12.50	14.40 to 15.60	23.00 to 25.00	34.50 to 37.50	46.00 to 50.00
PROTECTION CIRCUIT AND OTHERS	OVERCURRENT PROTECTION [A]		Works over 105% of rating and recovers automatically						
	OVERVOLTAGE PROTECTION[V]		5.75 to 7.00	8.63 to 10.50	13.80 to 16.80	17.25 to 21.00	27.60 to 33.60	41.40 to 50.40	55.20 to 67.20
ISOLATION	INPUT-OUTPUT		AC4,000V 1minute, DC500V 100MΩ min (At Room Temperature) 2MOPP						
	INPUT-FG		AC2,000V 1minute, DC500V 100MΩ min (At Room Temperature) 1MOPP						
	OUTPUT-FG		AC2,000V 1minute, DC500V 100MΩ min (At Room Temperature) 1MOPP						
ENVIRONMENT	OPERATING TEMP.,HUMID. *3		-20 to +70℃, 20 - 90%RH (Non condensing)						
	STORAGE TEMP.,HUMID.		-20 to +75℃, 20 - 90%RH (Non condensing)						
	VIBRATION		10 - 55Hz, 19.6m/s² (2G) , 3minutes period, 60minutes each along X, Y and Z axis						
	IMPACT		196.1m/s² (20G) , 11ms, once each X, Y and Z axis						
SAFETY AND EMC	AGENCY APPROVALS		ANSI/AAMI ES60601-1, EN60601-1 3rd, C-UL (equivalent to CAN/CSA-C22.2 No.60601-1) , UL62368-1,EN62368-1, C-UL (equivalent to CAN/CSA-C22.2 No.62368-1) , Complies with EN60335-1						
	EMC EMISSION		Complies with CISPR11-B, CISPR32-B, EN55011-B, EN55032-B, FCC Part 15-B, FCC Part 18-B						
	EMC IMMUNITY		Complies with EN61000-4-2, 3, 4, 5, 6, 8, 11						
	HARMONIC ATTENUATOR *4		Complies with IEC61000-3-2 (Class A) No built-in active PFC						
OTHERS	CASE SIZE/WEIGHT *5		50.8×24.2×76.2mm [2.0×0.95×3.0 inches] (W×H×D) / 120g max						
	COOLING METHOD		Convection						
WARRANTY	WARRANTY *6		5 years (subject to the operating conditions)						

*1 Consult us about dynamic load and input response. Measure the output voltage by using the average mode of the tester to deal with the burst operation at low (Io=0~20%typ) load.
*2 This is the result of measurement of the testing board with capacitors of 47μF and 0.1μF placed at 150 mm from the output terminals by a 20MHz oscilloscope or a ripple-noise meter equivalent to Keisoku-GikenRM104.
When the load factor is low (Io=0~20%typ), the switching power loss is reduced by burst operation, which will cause ripple noise to go beyond the specifications.
*3 Output power derating is required. Refer to "Derating"
*4 Please contact us about another class. When two or more units are operating it may not comply with the IEC61000-3-2. Please contact us for details.
*5 Dimensions below PCB are not included.
*6 Consult us about details.
*7 The listed options may affect the published standard specifications. Please contact us for detailed product specifications and safety approvals.
* All parameters not specially mentioned are measured at ACIN 230V, rated load and 25℃ of ambient temperature.
* Do not use the power supply in overcurrent conditions or in unspecified input voltage ranges. Otherwise the internal components may be damaged.
* Parallel operation is not possible with this model.
* Acoustic noise may be heard from the power supply when used for pulse load.

November 27, 2024

Block diagram

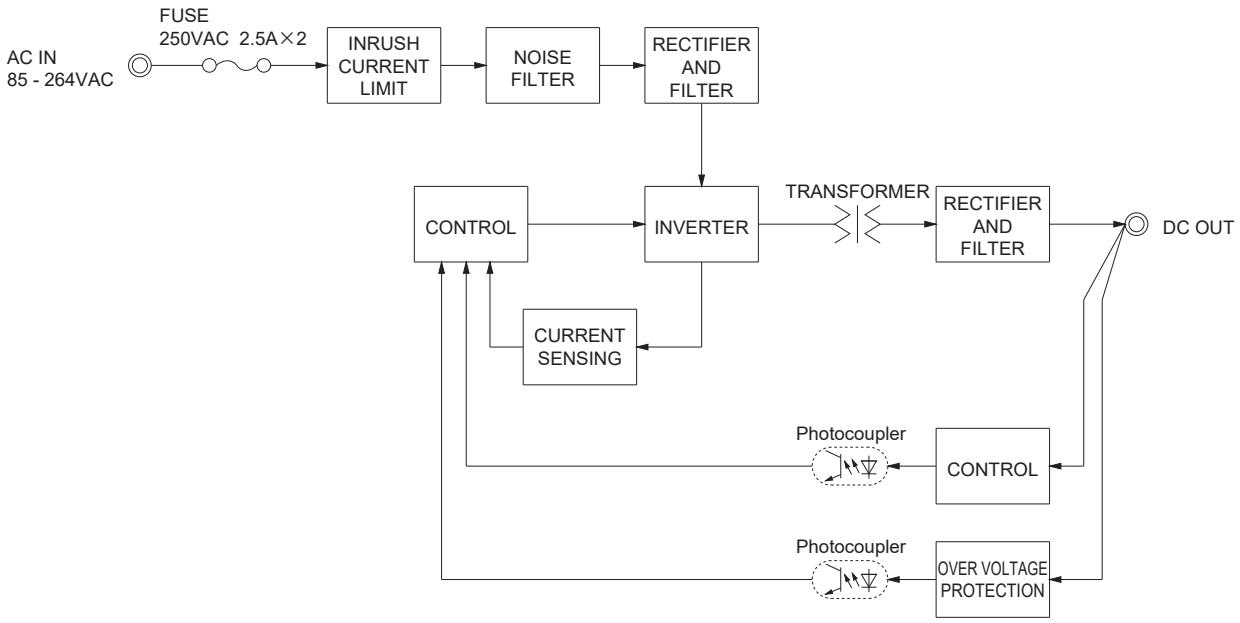

External view

Standard type

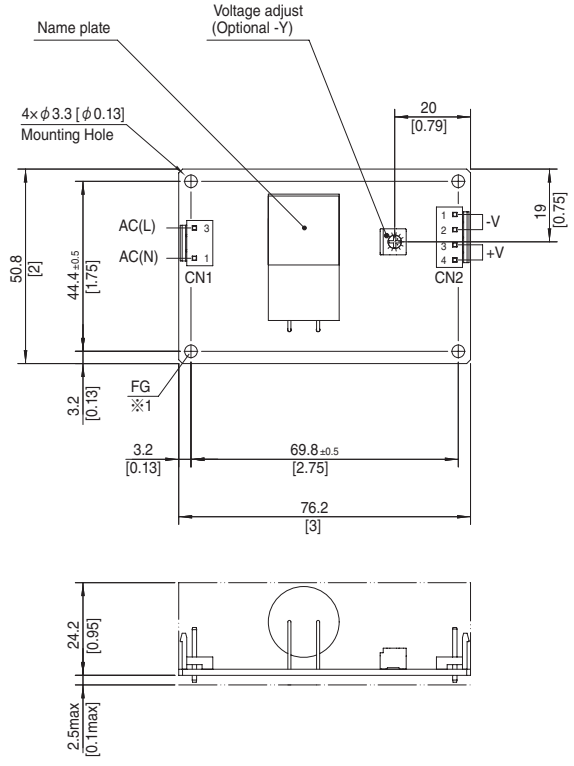

Chassis and cover type

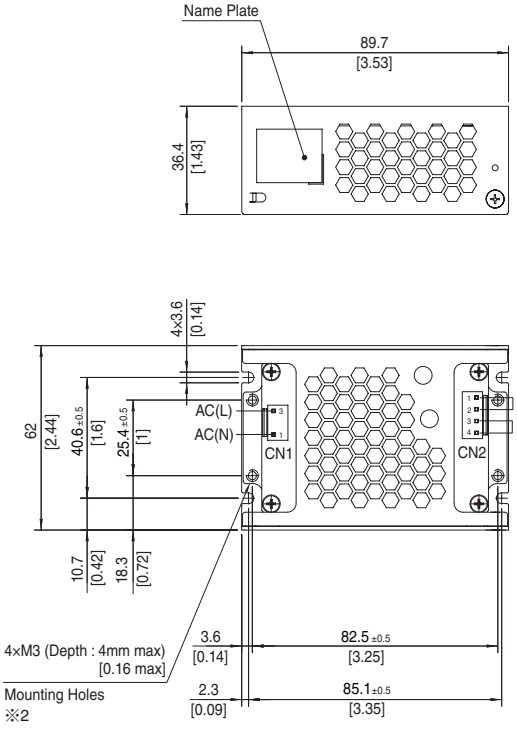

Mating connector and terminal of CN1, CN2

I/O Connector		Mating Connector	Terminal	Mfr.
CN1	B2P3-VH	VHR-3N	Reel : SVH-21T-P1.1 Loose piece : BVH-21T-P1.1	J.S.T.
CN2	B4P-VH	VHR-4N	Reel : SVH-21T-P1.1 Loose piece : BVH-21T-P1.1	J.S.T.

<Pin Assignments>

CN1

Pin No.	Input
1	AC(N)
2	
3	AC(L)

CN2

Pin No.	Output
1, 2	-V
3, 4	+V

※ Dimensions in mm, [ ] =inches
※ Tolerance : ±1 [±0.04]
※ Weight : 120g max (with Chassis and cover 180g max)
※ PCB Material/thickness : FR-4/1.6 [0.06]
※1 The mounting hole is for FG connection.
The mounting hole in the -E option is not for FG connection.
※2 Mounting torque : 0.49N・m max

COSEL AC-DC Power Supplies Medical Type

UMA120F

Ordering information

UM	A	120	F	-□	-□
①	②	③	④	⑤	⑥

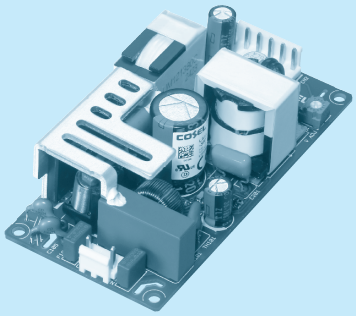

①Series name
②Single output
③Output wattage
④Universal input
⑤Output voltage
⑥Optional ＊7
T : Terminal block

＊Make sure necessary tests will be carried out on your end equipment with the power supply installed in accordance with any required EMC/EMI regulations.

MODEL	UMA120F-12 -Y	UMA120F-24-Y	UMA120F-48-Y
MAX OUTPUT WATTAGE[W]	120	120	120
DC OUTPUT	12V 10A	24V 5A	48V 2.5A

SPECIFICATIONS

	MODEL		UMA120F-12 -Y	UMA120F-24-Y	UMA120F-48-Y
INPUT	VOLTAGE[V]		AC85 - 264 1φ		
	CURRENT[A]	ACIN 115V	1.2		
		ACIN 230V	0.6		
	FREQUENCY[Hz]		50/60 (47-63)		
	EFFICIENCY[%]	ACIN 115V	91typ	92typ	92typ
		ACIN 230V	93typ	94typ	94typ
	INRUSH CURRENT[A]	ACIN 115V	25typ		
		ACIN 230V	50typ		
	POWR FACTOR	ACIN 115V	0.98		
		ACIN 230V	0.93		
	LEAKAGE CURRENT[uA]	ACIN 264V	200max		
	TOUCH CURRENT[uA]	ACIN 264V	75max		
OUTPUT	VOLTAGE[V]		12	24	48
	CURRENT[A]		10	5	2.5
	WATTAGE[W]		120	120	120
	LINE REGULATION[mV] ＊1		48max	96max	192max
	LOAD REGULATION[mV] ＊1		100max	150max	240max
	RIPPLE NOISE [mVp-p] ＊2	Io=100%	150 (Bandwidth 20MHz)		
	TEMPERATURE REGULATION [mV]	0~+50℃	120max	240max	480max
	START-UP TIME[ms]	ACIN 115V	700typ		
		ACIN 230V			
	HOLD-UP TIME[ms]		16typ		
	OUTPUT VOLTAGE ADJUSTMENT RANGE[V]		11.40 to 12.60	22.80 to 25.20	45.60 to 50.40
	OUTPUT VOLTAGE SETTING[V]		12.00 to 12.30	24.00 to 24.60	48.00 to 49.20
PROTECTION CIRCUIT AND OTHERS	OVERCURRENT PROTECTION [A]		Works over 105% of rating and recovers automatically		
	OVERVOLTAGE PROTECTION[V]		13.80 to 16.80	27.60 to 33.60	55.20 to 67.20
ISOLATION	INPUT-OUTPUT		AC4,000V 1minute, DC500V 100MΩ min (At Room Temperature) 2MOPP		
	INPUT-FG		AC2,000V 1minute, DC500V 100MΩ min (At Room Temperature) 1MOPP		
	OUTPUT-FG		AC2,000V 1minute, DC500V 100MΩ min (At Room Temperature) 1MOPP		
ENVIRONMENT	OPERATING TEMP.,HUMID. ＊3		-20 to +70℃, 20 - 90%RH (Non condensing)		
	STORAGE TEMP.,HUMID.		-20 to +75℃, 20 - 90%RH (Non condensing)		
	VIBRATION		10 - 55Hz, 19.6m/s² (2G) , 3minutes period, 60minutes each along X, Y and Z axis		
	IMPACT		196.1m/s² (20G) , 11ms, once each X, Y and Z axis		
SAFETY AND EMC	AGENCY APPROVALS		ANSI/AAMI ES60601-1, EN60601-1 3rd, C-UL (equivalent to CAN/CSA-C22.2 No.60601-1), UL62368-1,EN62368-1, C-UL (equivalent to CAN/CSA-C22.2 No.62368-1)		
	EMC EMISSION		Complies with CISPR11-B, CISPR32-B, EN55011-B, EN55032-B, FCC Part15-B and FCC Part18-B		
	EMC IMMUNITY		Complies with EN61000-4-2, 3, 4, 5, 6, 8, 11		
	HARMONIC ATTENUATOR ＊4		Complies with IEC61000-3-2 Class A		
OTHERS	CASE SIZE/WEIGHT ＊5		50.8×29.0×101.6mm [2.0×1.14×4.0 inches] (W×H×D) / 150g max		
	COOLING METHOD		Convection		
WARRANTY	WARRANTY ＊6		5 years (subject to the operating conditions)		

＊1 Consult us about dynamic load and input response. Measure the output voltage by using the average mode of the tester to deal with the burst operation at low (Io=0~10%typ) load.
＊2 This is the result of measurement of the testing board with capacitors of 47μF and 0.1μF placed at 150 mm from the output terminals by a 20MHz oscilloscope or a ripple-noise meter equivalent to Keisoku-GikenRM104.
When the load factor is low (Io=0~10%typ), the switching power loss is reduced by burst operation, which will cause ripple noise to go beyond the specifications.
＊3 Output power derating is required. Refer to "Derating"
＊4 Please contact us about another class.
＊5 Dimensions below PCB are not included.
＊6 Consult us about details.
＊7 The listed options may affect the published standard specifications. Please contact us for detailed product specifications and safety approvals.
＊ All parameters not specially mentioned are measured at ACIN 230V, rated load and 25℃ of ambient temperature.
＊ Do not use the power supply in overcurrent conditions or in unspecified input voltage ranges. Otherwise the internal components may be damaged.
＊ Parallel operation is not possible with this model.
＊ Acoustic noise may be heard from the power supply when used for pulse load.

November 27, 2024

Block diagram

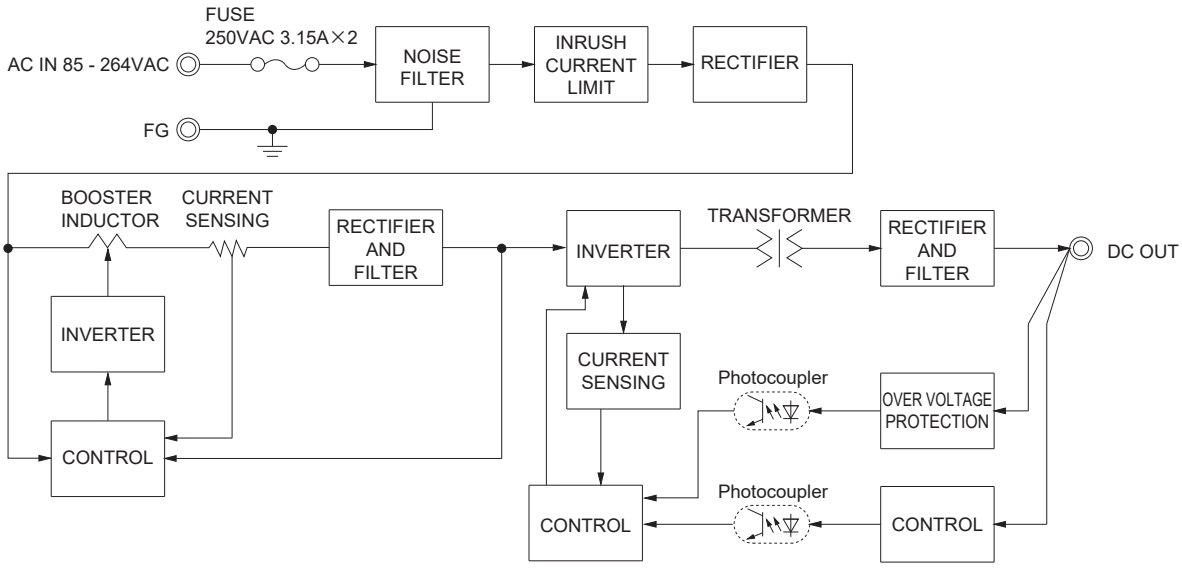

External view

Standard type

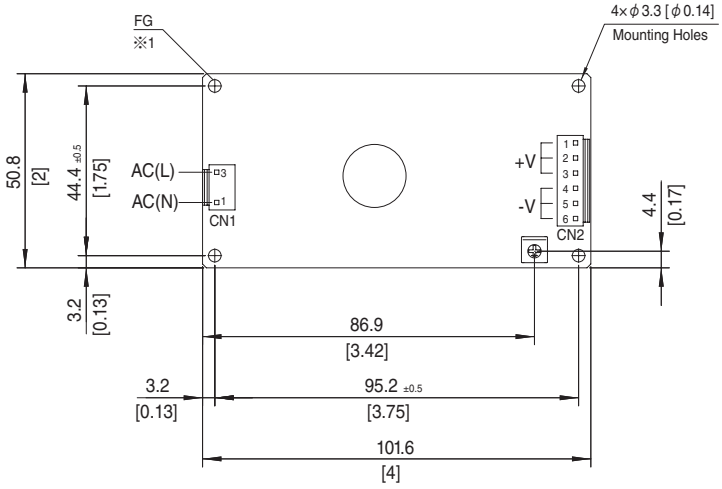

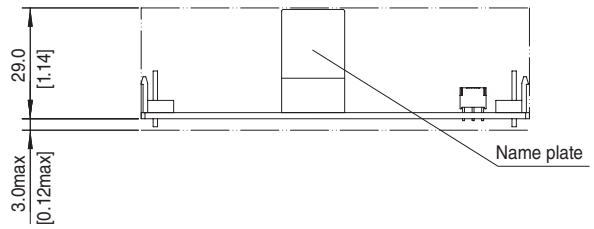

Mating connector and terminal of CN1, CN2

I/O Connector		Mating Connector	Terminal	Mfr.
CN1	B2P3-VH	VHR-3N	Reel : SVH-21T-P1.1 Loose piece : BVH-21T-P1.1	J.S.T.
CN2	B6P-VH	VHR-6N	Reel : SVH-21T-P1.1 Loose piece : BVH-21T-P1.1	J.S.T.

<Pin Assignments>

CN1

Pin No.	Input
1	AC(N)
2	
3	AC(L)

CN2

Pin No.	Output
1, 2, 3	+V
4, 5, 6	–V

※ Dimensions in mm, [ ] =inches
※ Tolerance : ±1 [±0.04]
※ Weight : 150g max
※ PCB Material/thickness : FR-4/1.6 [0.06]
※1 The mounting hole is for FG connection.

Assembling and Installation Method

■When the power supply is used with natural convection cooling, the standard mounting position is horizontal.

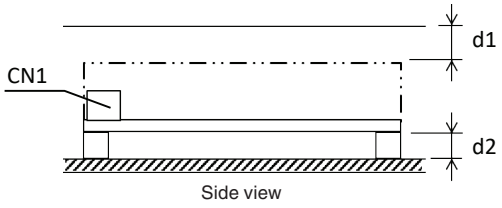

Side view

■AC voltage exists on the primary side. Therefore, in order to prevent electric shock, or to meet the leakage current requirements of the safety standard, you need to ensure the proper insulation distance.

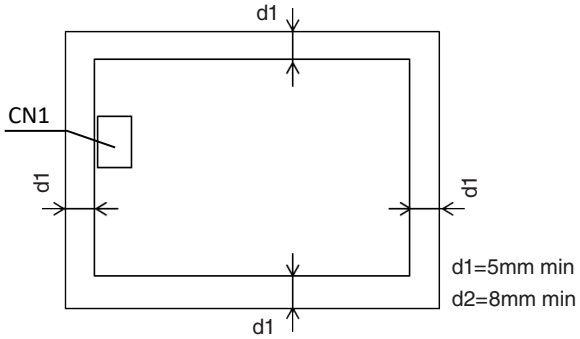

Top view

Mounting screw

■The mounting screws should be M3. The hatched area indicates the proper area for mounting hardware.

● UMA30F, UMA60F

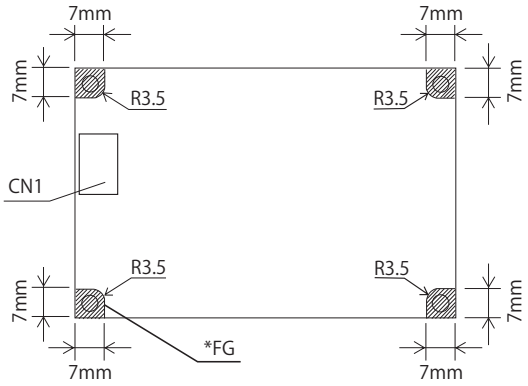

＊Recommend to electrically connect FG to metal chassis for reducing noise.

● UMA120F

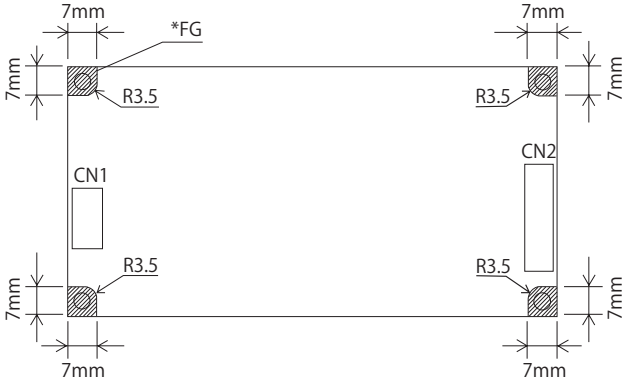

＊Recommend to electrically connect FG to metal chassis for reducing noise.

■The mounting screws should be M3.
The hatched area indicates the proper area for mounting hardware.

■This power supply is manufactured by SMD technology.
Stress to the PCB such as twisting or bending may cause damage to the unit, please handle with care.

Derating

Derating curve for input voltage

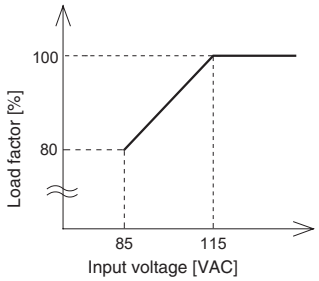

UMA30F
Ambient temperature derating curve at rated input

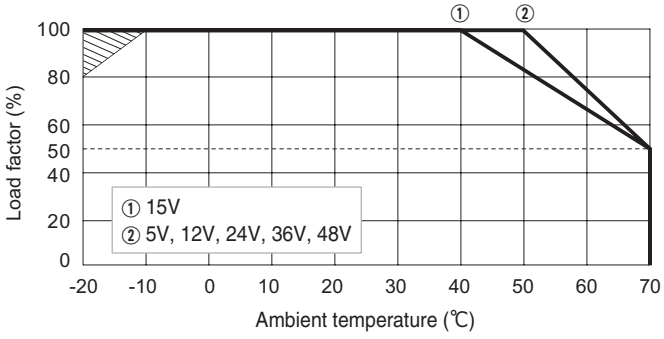

UMA60F
Ambient temperature derating curve at rated input

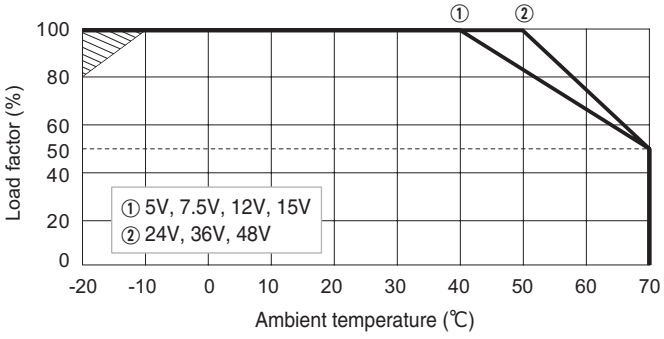

UMA30F-SN
Ambient temperature derating curve at rated input

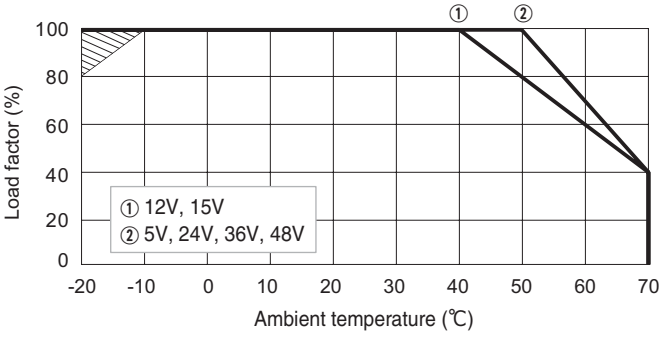

UMA60F-SN
Ambient temperature derating curve at rated input

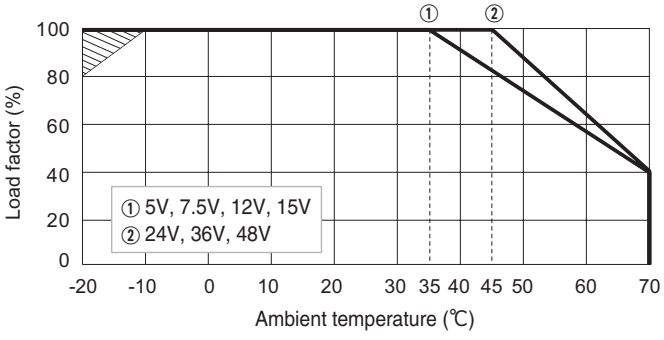

UMA120F
Ambient temperature derating curve at rated input

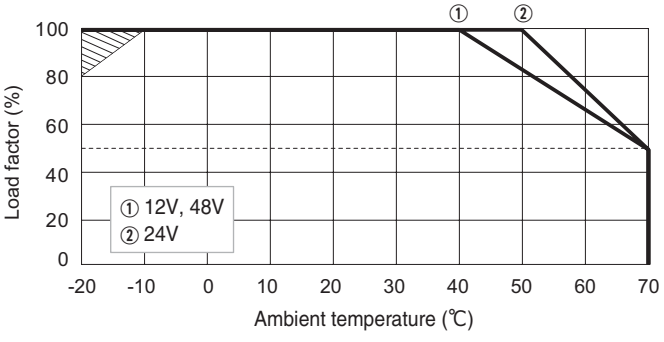

■The ambient temperature should be measured 5 to 10 cm away from the power supply so that it won't be influenced by the heat from the power supply. Please consult us for more details.

■The shaded area is the derating required at start-up.

Instruction Manual

■Please read the “Instruction Manual” and “Before using our product” before you use our product.

Instruction Manual https://www.cosel.co.jp/redirect/catalog/en/UMA/
Before using our product https://en.cosel.co.jp/technical/caution/index.html

UMA NOTICE

Basic Characteristics Data

Model	Circuit method	Switching frequency [kHz]	Input current [A]	Rated input fuse	Inrush current protection circuit	PCB/Pattern			Parallel operation
						Material	Single sided	Double sided	
UMA30F	Flyback converter	20 to 125	0.7	250V 2.5A	Thermistor	CEM-3	Yes		No
UMA60F	Flyback converter	20 to 125	1.4	250V 2.5A	Thermistor	FR4		Yes	No
UMA120F	Active filter	15 to 300	1.2	250V 3.15A	Thermistor	FR4		Yes	No
	LLC resonant converter	70 to 280							