XLamp® CMA2550 Pro9™ LED



PRODUCT DESCRIPTION

The XLamp® High-Current LED Array family is optimized for best-in-class lumen output, efficacy and reliability at high drive currents. XLamp CMA LEDs share the same package design and LES sizes as Cree LED's industry-leading CXA2 Standard Density LEDs, enabling lighting manufacturers to address a range of performance requirements for applications such as track, downlight and outdoor lighting using a single easy-to-use platform. XLamp High-Current LED Arrays are available in 2-step and 3-step EasyWhite® bins.

Pro9™ version LEDs deliver up to 15% higher efficacy for 90 and 95 color rendering index (CRI) over standard version LEDs without sacrificing color rendering quality. Pro9 LEDs feature the industry's highest operating temperature rating of 105 °C and the same maximum current as the standard versions. In addition, all Pro9 LEDs share the same mechanical and electrical characteristics as the standard versions.

FEATURES

- 19-mm optical source
- Mechanical and optical design consistent with CXA25 and CXB25 LEDs
- EasyWhite® 2- and 3-step binning
- Premium Color 2- and 3-step binning
- Pro9 LEDs available in 90 and 95 CRI minimum options
- Forward voltage option: 36-V class
- 85 °C binning and characterization
- Maximum drive current: 3300 mA
- 115° viewing angle, uniform chromaticity profile
- Top-side solder connections
- RoHS and REACH compliant
- UL® recognized component (E349212)

TABLE OF CONTENTS

Characteristics 2
Operating Limits 2
Flux Characteristics, EasyWhite® Order Codes and Bins 3
Flux Characteristics, Premium Order Codes and Bins 3
Relative Spectral Power Distribution, EasyWhite® LEDs 4
Relative Spectral Power Distribution, Premium Color LEDs 5
Electrical Characteristics 6
Relative Luminous Flux 7
Typical Spatial Distribution 7
EasyWhite® Performance Groups - Chromaticity 8
Premium Color Performance Groups - Chromaticity 9
EasyWhite® Bins Plotted on the 1931 CIE Color Space 10
Premium Color Bins Plotted on the 1931 CIE Color Space 11
Bin and Order Code Formats 12
Mechanical Dimensions 13
Thermal Design 14
Notes 15
Packaging 17

Cree LED / 4001 E. Hwy. 54, Suite 2000 / Durham, NC 27709 USA / +1.919.313.5330 / www.cree-led.com

© 2022-2023 Cree LED. The information in this document is subject to change without notice. Cree®, the Cree logo, XLamp®, EasyWhite®, and the Cree LED logo are registered trademarks, and Pro9 is a trademark, of Cree LED. UL® and the UL logo are registered trademarks of UL LLC.

CHARACTERISTICS

Characteristics	Unit	Minimum	Typical	Maximum
Viewing angle (FWHM)	degrees		115	
ESD withstand voltage (JEDEC JS-001-2012)	V		Class 3A	
DC forward current	mA			3300*
Reverse current	mA			0.1
Forward voltage (@ 1400 mA, T_j = 85 °C)	V		34.0	37.0

* Refer to the Operating Limits section.

OPERATING LIMITS

The maximum current rating of the CMA2550 Pro9 LED depends on the case temperature (Tc) when the LED has reached thermal equilibrium under steady-state operation. The graph shown below assumes that the system design employs good thermal management (thermal interface material and heat sink) and may vary when poor thermal management is employed. Either solder pad shown in the Mechanical Dimensions section on page 13 can be used as the Tc measurement point.

Another important factor in good thermal management is the temperature of the Light Emitting Surface (LES). Cree LED recommends a maximum LES temperature of 140 °C to ensure optimal LED lifetime. Please refer to the Thermal Design section on page 14 for more information on LES temperature measurement.

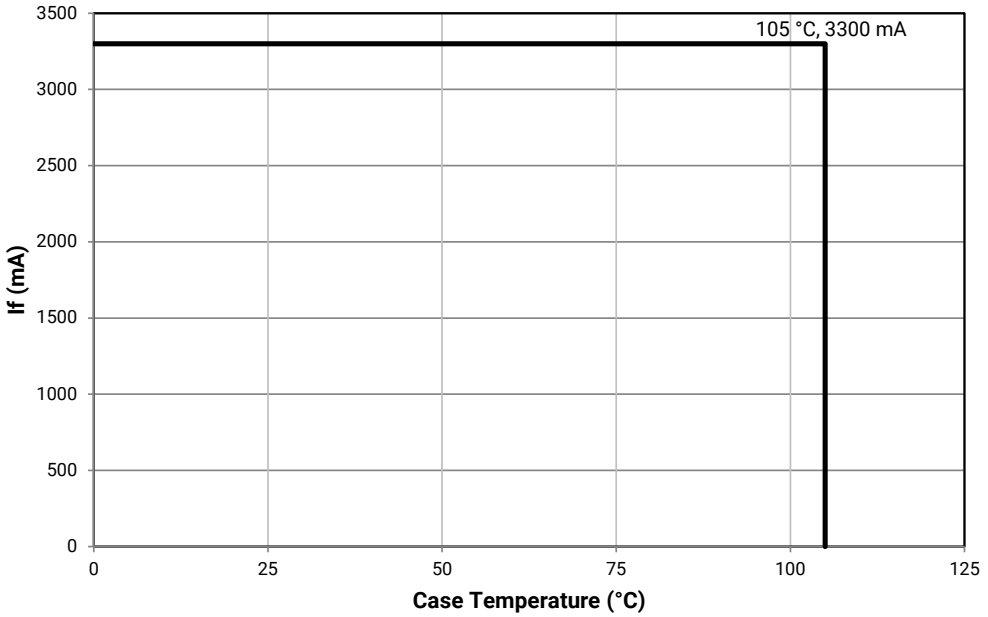

© 2022-2023 Cree LED. The information in this document is subject to change without notice. Cree®, the Cree logo, XLamp®, EasyWhite®, and the Cree LED logo are registered trademarks, and Pro9 is a trademark, of Cree LED. UL® and the UL logo are registered trademarks of UL LLC.

FLUX CHARACTERISTICS, EASYWHITE® ORDER CODES AND BINS (I_F = 1400 mA, T_J = 85 °C)

The following tables provide order codes for XLamp CMA2550 Pro9 LEDs. For a complete description of the order code nomenclature, please see the Bin and Order Code Formats section (page 12).

Nominal CCT	CRI*		Minimum Luminous Flux (lm)	Typical Luminous Flux (lm)	2-Step		3-Step	
	Min.	Typ			Group	Order Code	Group	Order Code
5000 K	90	92	6653	7192			50G	CMA2550-0000-00PN0U0A50G
4000 K	90	92	6858	7414	40H	CMA2550-0000-00PN0U0A40H	40G	CMA2550-0000-00PN0U0A40G
	95	98	6173	6673	40H	CMA2550-0000-00PN0Z0A40H		
3500 K	90	92	6645	7184	35H	CMA2550-0000-00PN0U0A35H	35G	CMA2550-0000-00PN0U0A35G
	95	98	5981	6465	35H	CMA2550-0000-00PN0Z0A35H		
3000 K	90	92	6460	6984	30H	CMA2550-0000-00PN0U0A30H	30G	CMA2550-0000-00PN0U0A30G
	95	98	5685	6146	30H	CMA2550-0000-00PN0Z0A30H		
2700 K	90	92	6225	6730	27H	CMA2550-0000-00PN0U0A27H	27G	CMA2550-0000-00PN0U0A27G
	95	98	5603	6057	27H	CMA2550-0000-00PN0Z0A27H		

FLUX CHARACTERISTICS, PREMIUM ORDER CODES AND BINS (I_F = 1400 mA, T_J = 85 °C)

Specialty

Nominal CCT	CRI		Minimum Luminous Flux (lm)	Typical Luminous Flux (lm)	2-Step		3-Step			
	Min.	Typ			Group	Order Code	Group	Order Code	Group	Order Code
3100 K	90	92	6460	6984			31Q	CMA2550-0000-00PN0U0A31Q		
3000 K	90	92	6266	6774					30U	CMA2550-0000-00PN0U0A30U
	90	92	6331	6844			30Q	CMA2550-0000-00PN0U0A30Q		
	95	98	5401	5839	L7C	CMA2550-0000-00PN0Z0AL7C				

Notes

- Cree LED maintains a tolerance of ±7% on flux and power measurements, ±0.005 on chromaticity (CCx, CCy) measurements and a tolerance of ±2 on CRI measurements. See the Measurements section (page 15).
- For 90 CRI minimum LEDs, CRI R9 typical is 60.

© 2022-2023 Cree LED. The information in this document is subject to change without notice. Cree®, the Cree logo, XLamp®, EasyWhite®, and the Cree LED logo are registered trademarks, and Pro9 is a trademark, of Cree LED. UL® and the UL logo are registered trademarks of UL LLC.

RELATIVE SPECTRAL POWER DISTRIBUTION, EASYWHITE® LEDS

The following graphs are the result of a series of pulsed measurements at 1400 mA and T_J = 85 °C.

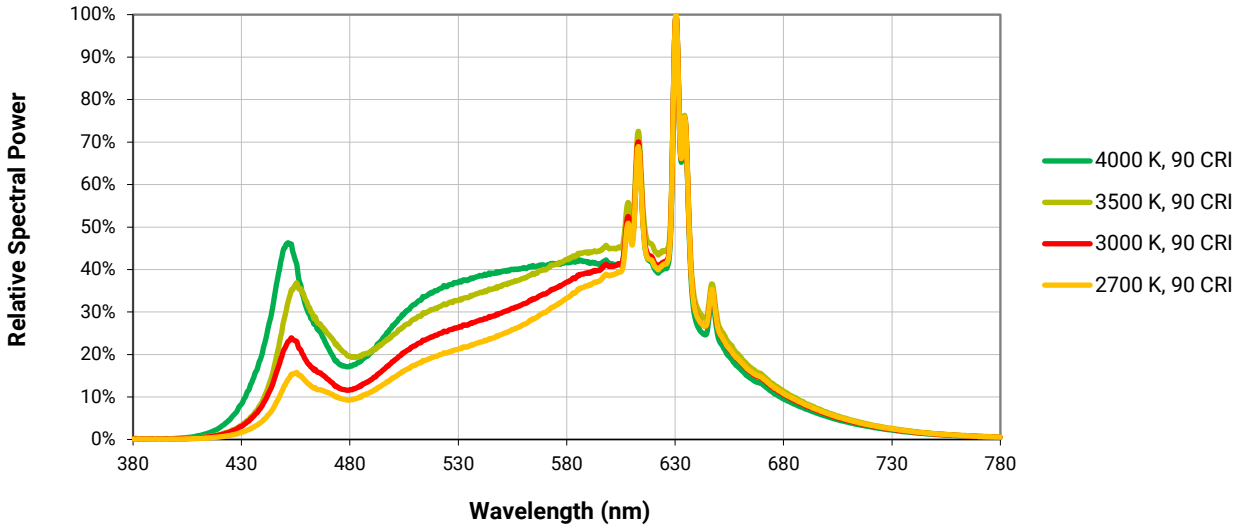

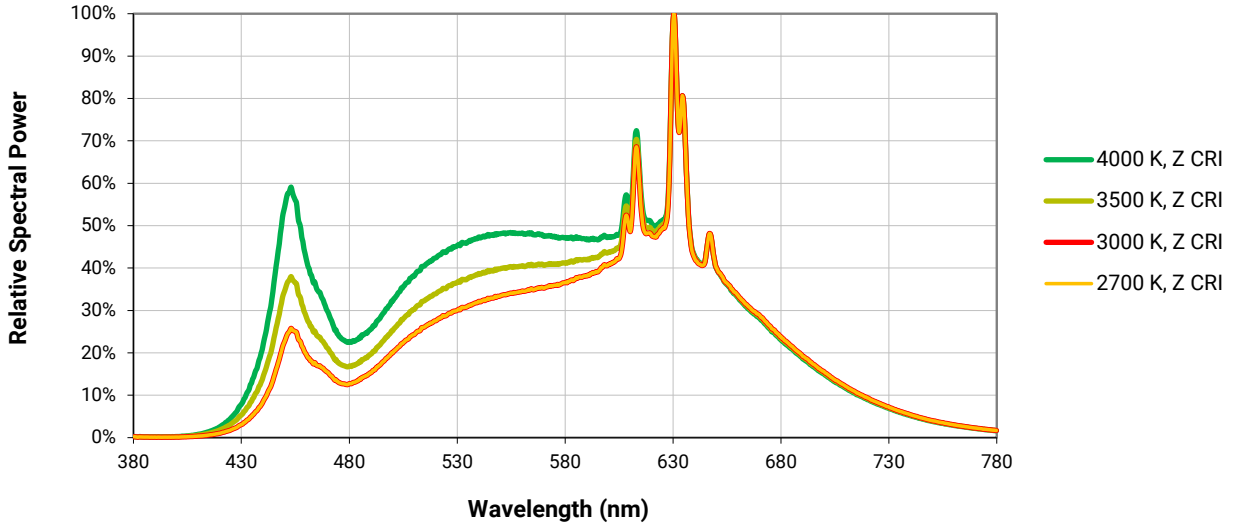

© 2022-2023 Cree LED. The information in this document is subject to change without notice. Cree®, the Cree logo, XLamp®, EasyWhite®, and the Cree LED logo are registered trademarks, and Pro9 is a trademark, of Cree LED. UL® and the UL logo are registered trademarks of UL LLC.

RELATIVE SPECTRAL POWER DISTRIBUTION, PREMIUM COLOR LEDS

The following graph is the result of a series of pulsed measurements at 1400 mA and T_J = 85 °C.

Specialty

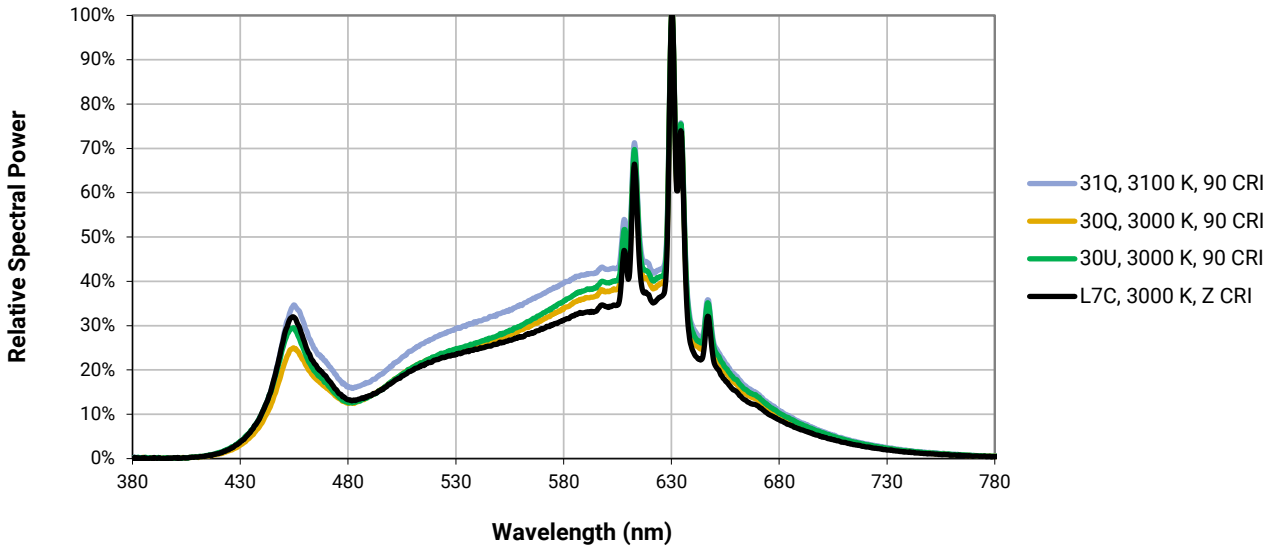

© 2022-2023 Cree LED. The information in this document is subject to change without notice. Cree®, the Cree logo, XLamp®, EasyWhite®, and the Cree LED logo are registered trademarks, and Pro9 is a trademark, of Cree LED. UL® and the UL logo are registered trademarks of UL LLC.

ELECTRICAL CHARACTERISTICS

The following graph is the result of a series of steady-state measurements.

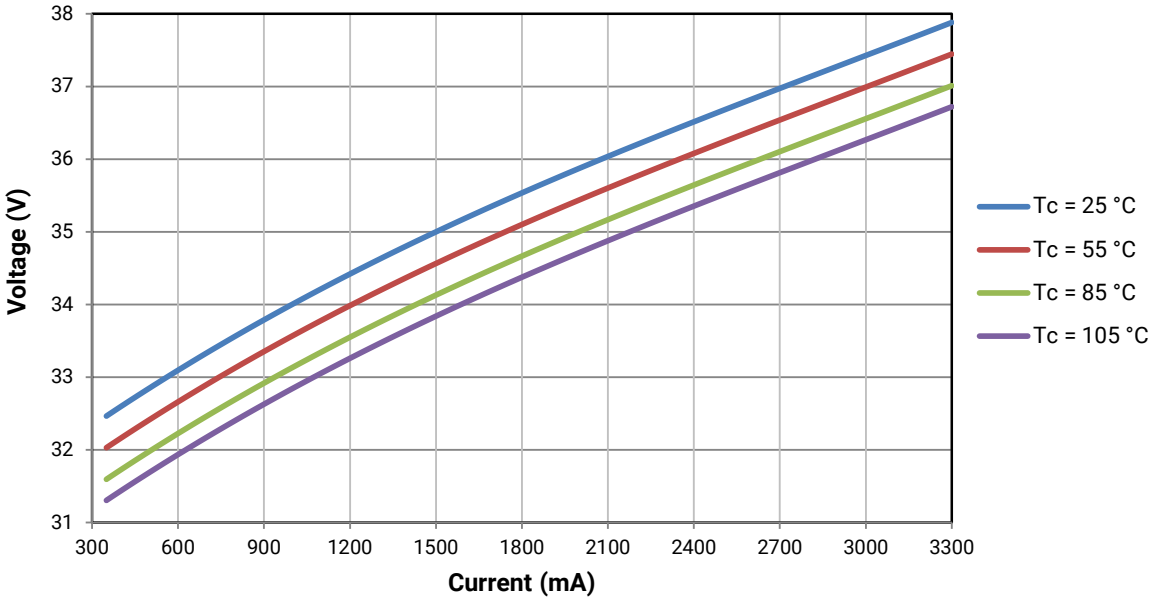

© 2022-2023 Cree LED. The information in this document is subject to change without notice. Cree®, the Cree logo, XLamp®, EasyWhite®, and the Cree LED logo are registered trademarks, and Pro9 is a trademark, of Cree LED. UL® and the UL logo are registered trademarks of UL LLC.

RELATIVE LUMINOUS FLUX

The relative luminous flux values provided below are the ratio of:

- Measurements of the CMA2550 Pro9 LED at steady-state operation at the given conditions, divided by
- Flux measured during binning, which is a pulsed measurement at 1400 mA at T_J = 85 °C.

For example, at steady-state operation of Tc = 25 °C, I_F = 1800 mA, the relative luminous flux ratio is 140% in the chart below. A CMA2550 Pro9 LED that measures 7414 lm during binning will deliver 10,380 lm (7414 * 1.4) at steady-state operation of Tc = 25 °C, I_F = 1800 mA.

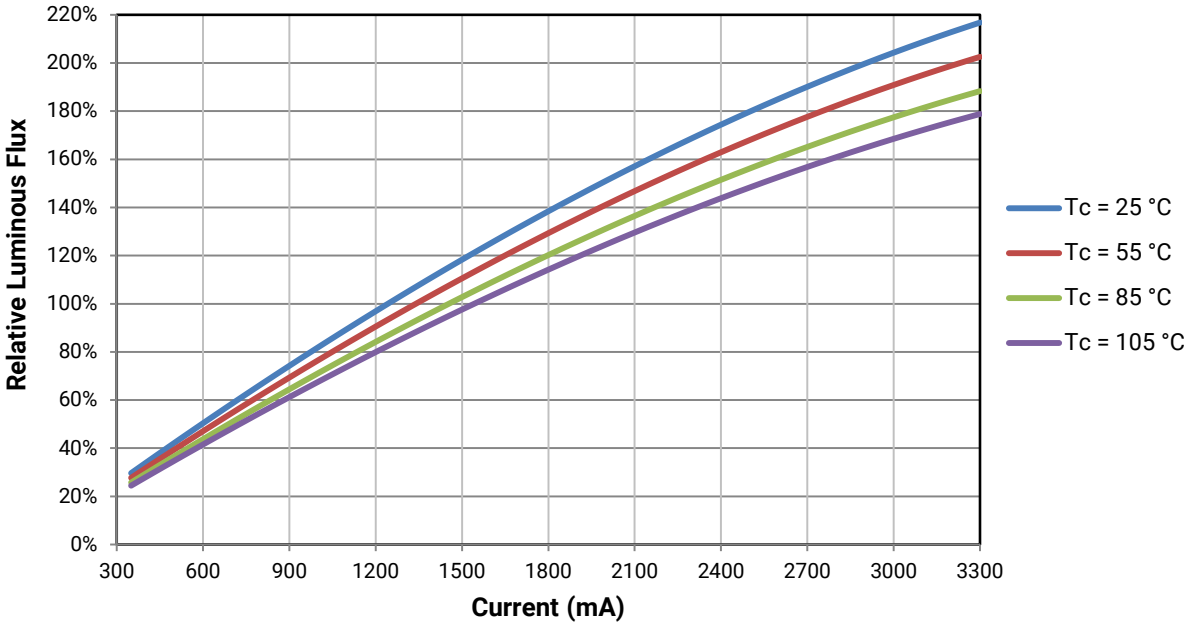

TYPICAL SPATIAL DISTRIBUTION

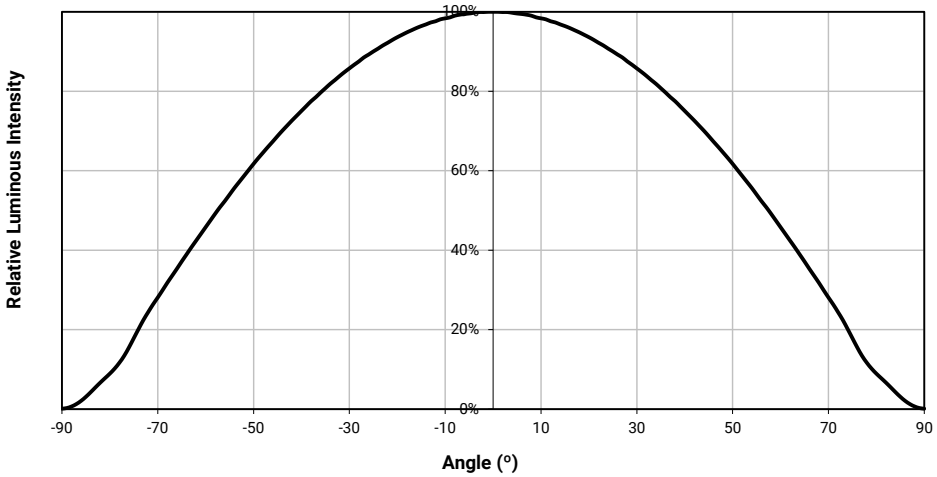

© 2022-2023 Cree LED. The information in this document is subject to change without notice. Cree®, the Cree logo, XLamp®, EasyWhite®, and the Cree LED logo are registered trademarks, and Pro9 is a trademark, of Cree LED. UL® and the UL logo are registered trademarks of UL LLC.

EASYWHITE® PERFORMANCE GROUPS - CHROMATICITY (T_J = 85 °C)

XLamp CMA2550 Pro9 LEDs are tested for chromaticity and placed into one of the regions defined by the following bounding coordinates.

EasyWhite Color Temperatures – 2-Step			
Code	**CCT**	**x**	**y**
40H	4000 K	0.3777	0.3739
		0.3797	0.3816
		0.3861	0.3855
		0.3838	0.3777
35H	3500 K	0.4022	0.3858
		0.4053	0.3942
		0.4125	0.3977
		0.4091	0.3891
30H	3000 K	0.4287	0.3975
		0.4328	0.4064
		0.4390	0.4086
		0.4347	0.3996
27H	2700 K	0.4524	0.4048
		0.4574	0.4140
		0.4633	0.4154
		0.4581	0.4062

EasyWhite Color Temperatures – 3-Step Ellipse						
Bin Code	**CCT**	**Center Point**		**Major Axis**	**Minor Axis**	**Rotation Angle (°)**
		x	**y**	**a**	**b**	
57G	5700 K	0.3287	0.3417	0.00738	0.00360	72.0
50G	5000 K	0.3447	0.3553	0.00840	0.00312	65.0
40G	4000 K	0.3818	0.3797	0.00939	0.00402	53.7
35G	3500 K	0.4073	0.3917	0.00927	0.00414	54.0
30G	3000 K	0.4338	0.4030	0.00834	0.00408	53.2
27G	2700 K	0.4577	0.4099	0.00834	0.00420	48.5

© 2022-2023 Cree LED. The information in this document is subject to change without notice. Cree®, the Cree logo, XLamp®, EasyWhite®, and the Cree LED logo are registered trademarks, and Pro9 is a trademark, of Cree LED. UL® and the UL logo are registered trademarks of UL LLC.

PREMIUM COLOR PERFORMANCE GROUPS - CHROMATICITY (T_J = 85 °C)

XLamp CMA2550 Pro9 LEDs are tested for chromaticity and placed into one of the regions defined by the following bounding coordinates.

Specialty

EasyWhite Color Temperatures – 2-Step			
Code	**CCT**	**x**	**y**
L7C	3000 K	0.4192	0.3754
		0.4224	0.3823
		0.4291	0.3847
		0.4257	0.3777

EasyWhite Color Temperatures – 3-Step Ellipse						
Bin Code	**CCT**	**Center Point**		**Major Axis**	**Minor Axis**	**Rotation Angle (°)**
		x	**y**	**a**	**b**	
31Q	3100 K	0.4236	0.3888	0.00848	0.00455	50.3
30Q	3000 K	0.4305	0.3935	0.00834	0.00408	53.2
30U	3000 K	0.4274	0.3837	0.00834	0.00408	53.2

© 2022-2023 Cree LED. The information in this document is subject to change without notice. Cree®, the Cree logo, XLamp®, EasyWhite®, and the Cree LED logo are registered trademarks, and Pro9 is a trademark, of Cree LED. UL® and the UL logo are registered trademarks of UL LLC.

EASYWHITE® BINS PLOTTED ON THE 1931 CIE COLOR SPACE (T_J = 85 °C)

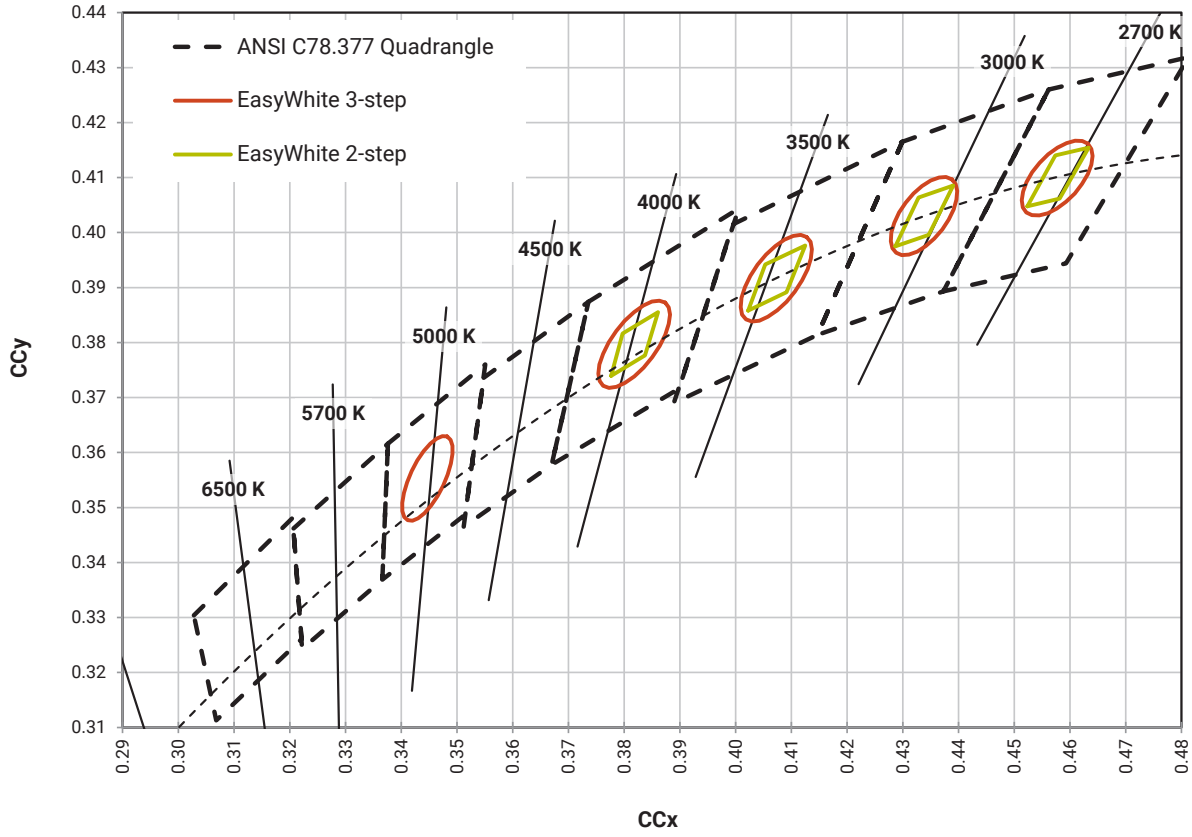

© 2022-2023 Cree LED. The information in this document is subject to change without notice. Cree®, the Cree logo, XLamp®, EasyWhite®, and the Cree LED logo are registered trademarks, and Pro9 is a trademark, of Cree LED. UL® and the UL logo are registered trademarks of UL LLC.

PREMIUM COLOR BINS PLOTTED ON THE 1931 CIE COLOR SPACE (T_J = 85 °C)

Specialty (2-step)

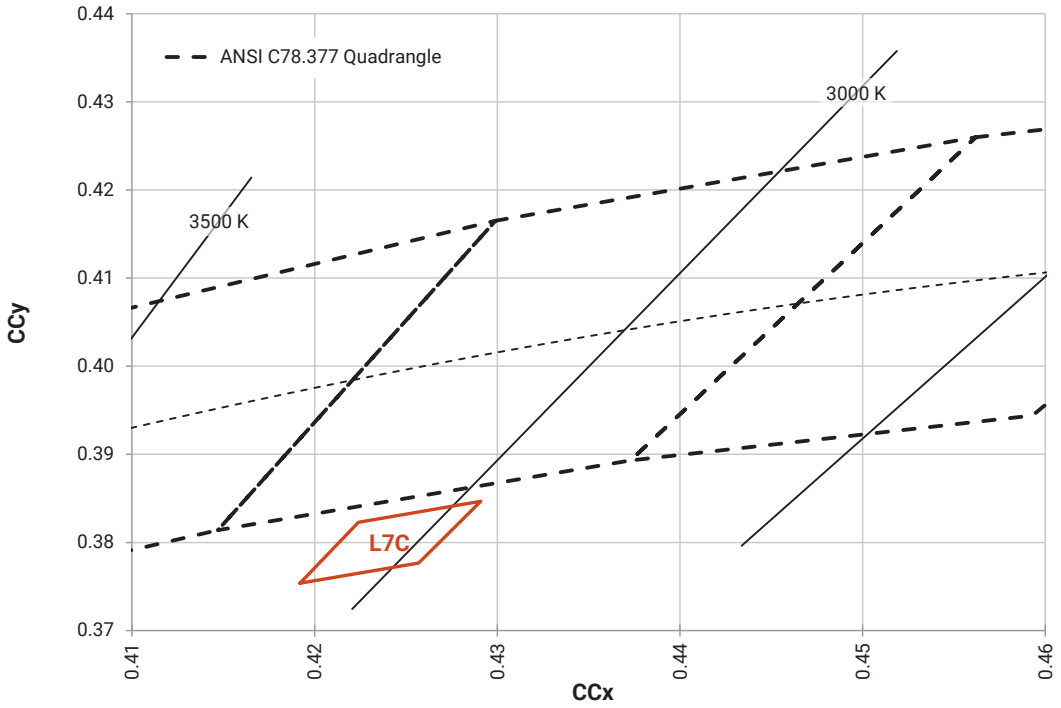

Specialty (3-step)

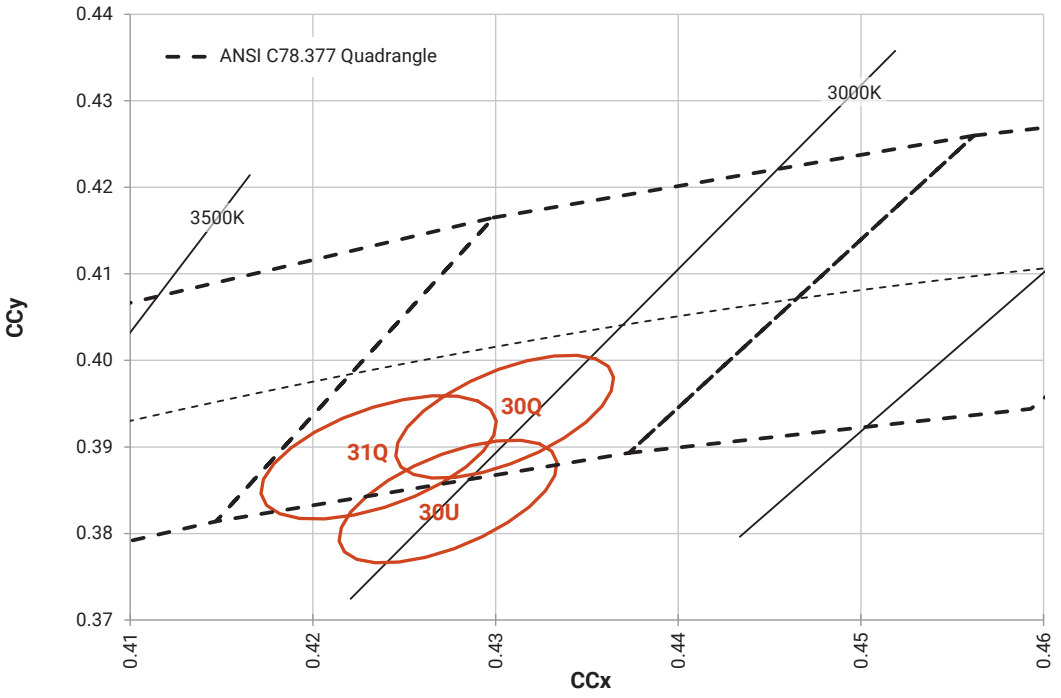

© 2022-2023 Cree LED. The information in this document is subject to change without notice. Cree®, the Cree logo, XLamp®, EasyWhite®, and the Cree LED logo are registered trademarks, and Pro9 is a trademark, of Cree LED. UL® and the UL logo are registered trademarks of UL LLC.

BIN AND ORDER CODE FORMATS

Bin codes and order codes are configured as follows:

Order Code

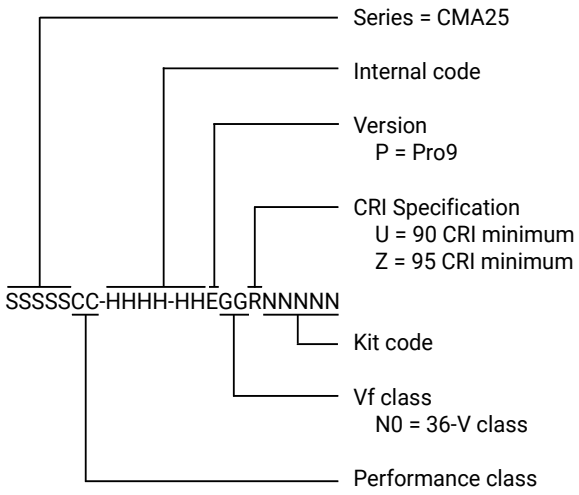

Bin Code

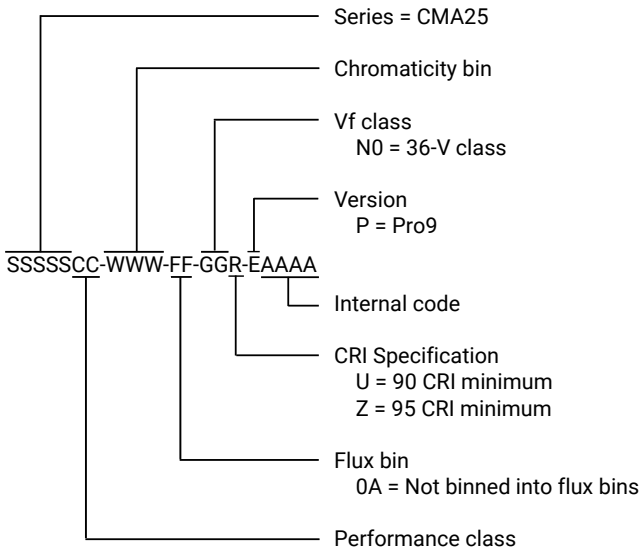

© 2022-2023 Cree LED. The information in this document is subject to change without notice. Cree®, the Cree logo, XLamp®, EasyWhite®, and the Cree LED logo are registered trademarks, and Pro9 is a trademark, of Cree LED. UL® and the UL logo are registered trademarks of UL LLC.

MECHANICAL DIMENSIONS

Dimensions are in mm.

Tolerances unless otherwise specified: ±.13

x° ± 1°

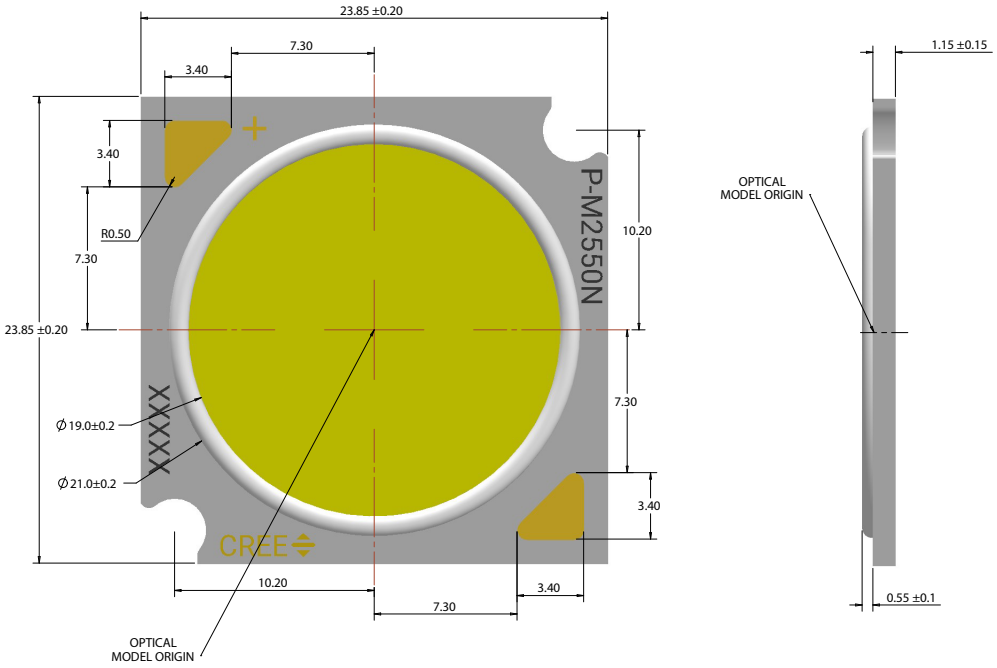

Meaning of LED marking

P-M2550N = 36-V CMA2550 Pro9

X1 X2 X3 X4 X5

X1 CCT
- 3 = 5000 K
- 5 = 4000 K
- 6 = 3500 K
- 7 = 3000 K
- 8 = 2700 K

X2
- M = EasyWhite LED on the black-body line
- Q = Specialty LED below the black-body line
- U = Specialty LED below the black-body line

X3 X4 Flux bin
- 0A = Not binned into flux bins

X5 CRI
- U = 90 CRI min
- Z = 95 CRI min

Tc measurement point: either the anode or cathode solder pad

© 2022-2023 Cree LED. The information in this document is subject to change without notice. Cree®, the Cree logo, XLamp®, EasyWhite®, and the Cree LED logo are registered trademarks, and Pro9 is a trademark, of Cree LED. UL® and the UL logo are registered trademarks of UL LLC.

THERMAL DESIGN

The CMA family of LED arrays can include over a hundred different LED die inside one package, and thus over a hundred different junction temperatures (T_J). Cree LED has intentionally removed junction-temperature-based operating limits and replaced the commonplace maximum T_J calculations with maximum ratings based on forward current (I_F) and case temperature (Tc). No additional calculations are required to ensure that the CMA LED is being operated within its designed limits. LES temperature measurement provides additional verification of good thermal design. Please refer to page 2 for the Operating Limit specification.

There is no need to calculate for T_J inside the package, as the thermal management design process, specifically from solder point (T_{SP}) to ambient (T_a), remains identical to any other LED component. For more information on thermal management of XLamp LEDs, please refer to the Thermal Management application note. For CMA soldering recommendations and more information on thermal interface materials (TIM), LES temperature measurement, and connection methods, please refer to the XLamp CM Family LEDs soldering and handling document.

To keep the CMA2550 Pro9 LED at or below the maximum rated Tc, the case to ambient temperature thermal resistance (R_c-a) must be at or below the maximum R_c-a value shown on the following graph, depending on the operating environment. The y-axis in the graph is a base 10 logarithmic scale.

As the figure at right shows, the R_c-a value is the sum of the thermal resistance of the TIM (R_tim) plus the thermal resistance of the heat sink (R_hs).

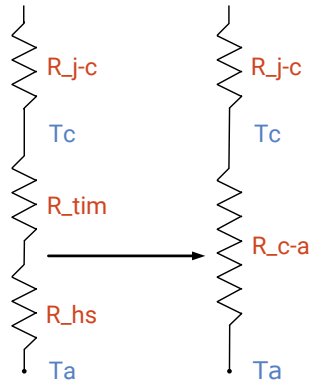

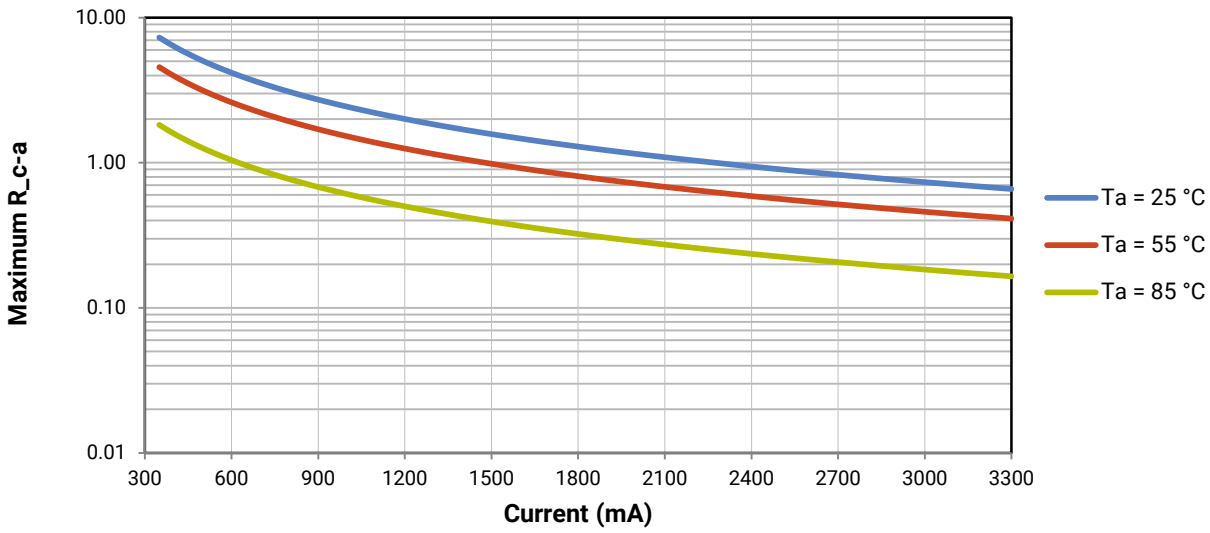

© 2022-2023 Cree LED. The information in this document is subject to change without notice. Cree®, the Cree logo, XLamp®, EasyWhite®, and the Cree LED logo are registered trademarks, and Pro9 is a trademark, of Cree LED. UL® and the UL logo are registered trademarks of UL LLC.

NOTES

LED Use

Use of this LED in information displays utilizing LCD Backlights and other emissive pixel display technology is prohibited ("Use Restrictions").

Measurements

The luminous flux, radiant power, chromaticity, forward voltage and CRI measurements in this document are binning specifications only and solely represent product measurements as of the date of shipment. These measurements will change over time based on a number of factors that are not within Cree LED's control and are not intended or provided as operational specifications for the products. Calculated values are provided for informational purposes only and are not intended or provided as specifications.

Pre-Release Qualification Testing

Please read the LED Reliability Overview for details of the qualification process Cree LED applies to ensure long-term reliability for XLamp LEDs and details of Cree LED's pre-release qualification testing for XLamp LEDs. Cree LED did not perform Room Temperature Operating Life (RTOL) testing on the CMA2550 Pro9 LED.

Lumen Maintenance

Cree LED now uses standardized IES LM-80-08 and TM-21-11 methods for collecting long-term data and extrapolating LED lumen maintenance. For information on the specific LM-80 data sets available for this LED, refer to the public LM-80 results document.

Please read the Long-Term Lumen Maintenance application note for more details on Cree LED's lumen maintenance testing and forecasting. Please read the Thermal Management application note for details on how thermal design, ambient temperature, and drive current affect the LED junction temperature.

RoHS Compliance

The levels of RoHS restricted materials in this product are below the maximum concentration values (also referred to as the threshold limits) permitted for such substances, or are used in an exempted application, in accordance with EU Directive 2011/65/EC (RoHS2), as implemented January 2, 2013. RoHS Declarations for this product can be obtained from your Cree LED representative or from the Product Ecology section of the Cree LED website.

REACH Compliance

REACH substances of very high concern (SVHCs) information is available for this product. Since the European Chemical Agency (ECHA) has published notice of their intent to frequently revise the SVHC listing for the foreseeable future, please contact a Cree LED representative to insure you get the most up-to-date REACH SVHC Declaration. REACH banned substance information (REACH Article 67) is also available upon request.

UL® Recognized Component

This product meets the requirements to be considered a UL Recognized Component with Level 4 enclosure consideration. The LED package or a portion thereof has been investigated as a fire and electrical enclosure per ANSI/UL 8750.

© 2022-2023 Cree LED. The information in this document is subject to change without notice. Cree®, the Cree logo, XLamp®, EasyWhite®, and the Cree LED logo are registered trademarks, and Pro9 is a trademark, of Cree LED. UL® and the UL logo are registered trademarks of UL LLC.

NOTES - CONTINUED

Vision Advisory

WARNING: Do not look at an exposed lamp in operation. Eye injury can result. For more information about LEDs and eye safety, please refer to the LED Eye Safety application note.

© 2022-2023 Cree LED. The information in this document is subject to change without notice. Cree®, the Cree logo, XLamp®, EasyWhite®, and the Cree LED logo are registered trademarks, and Pro9 is a trademark, of Cree LED. UL® and the UL logo are registered trademarks of UL LLC.

PACKAGING

Cree LED CMA2550 Pro9 LEDs are packaged in trays of 20. Five trays are sealed in an anti-static bag and placed inside a carton, for a total of 100 LEDs per carton. Each carton contains 100 LEDs from the same performance bin.

Dimensions are in inches.
Tolerances: ±.13
x° ±1°

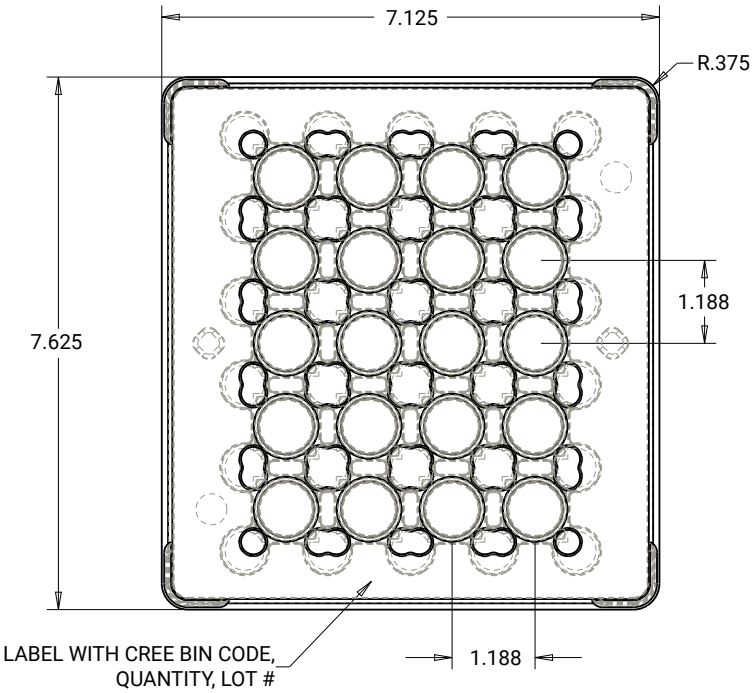

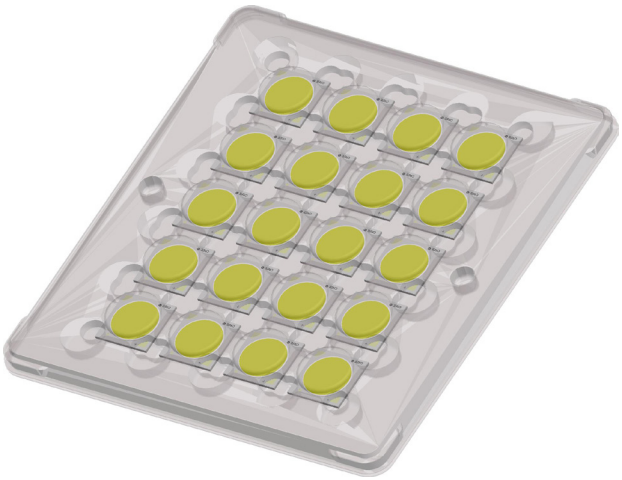

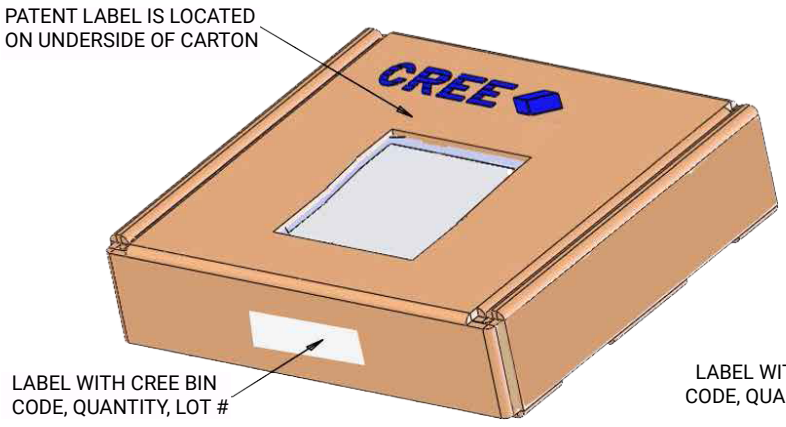

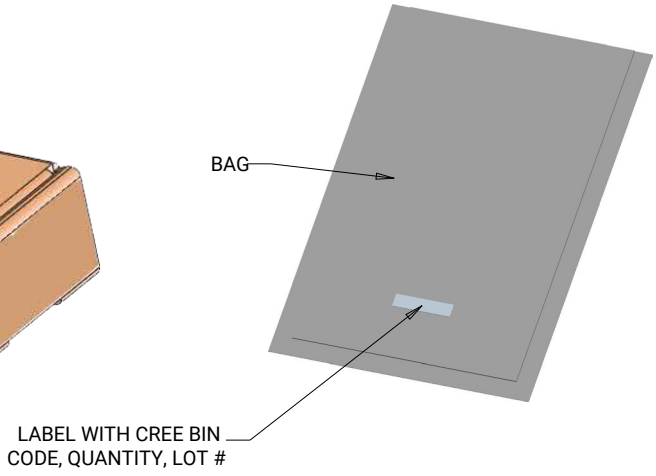

© 2022-2023 Cree LED. The information in this document is subject to change without notice. Cree®, the Cree logo, XLamp®, EasyWhite®, and the Cree LED logo are registered trademarks, and Pro9 is a trademark, of Cree LED. UL® and the UL logo are registered trademarks of UL LLC.