XLamp® XP-G2 LEDs

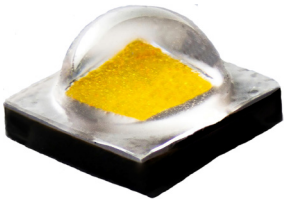

XP-G2 Standard LED



XP-G2 High Efficacy LED

PRODUCT DESCRIPTION

The original XLamp® XP-G2 LED pioneered a broad set of LED applications for the industry, including outdoor and area lighting, and has since served as a preferred choice by manufacturers that require advanced output, efficacy and optical control. The compact and proven 3.45-mm XP platform has an excellent ecosystem of optics and system solutions available, enabling lighting manufacturers to simplify their design process and shorten time to market.

XP-G2 LEDs are now available in two different White versions: Standard and High Efficacy (HE). XP-G2 Standard is the same breakthrough product that enabled a broad set of new LED applications for ceramic high-power LEDs.

The new High Efficacy version extends this legacy with a drop-in upgrade for existing designs optimized around XP-G2 LEDs. XP-G2 HE LEDs leverage Cree LED's latest high-power chip technology to deliver 25 percent more light output via a higher maximum current of 2000 mA and higher efficacy.

FEATURES

- Available in white, outdoor white and 80-, 85- and 90-CRI white
- ANSI-compatible chromaticity bins
- Broadcast color option at 5700 K
- Binned at 85 °C
- Maximum drive current: Standard: 1500 mA, HE: 2000 mA
- Low thermal resistance: 1.4 °C/W
- Wide viewing angle: Standard: 120°, HE: 125°
- Unlimited floor life at ≤ 30 °C/85% RH
- Reflow solderable - JEDEC J-STD-020C
- Electrically neutral thermal path
- RoHS and REACH compliant
- UL® recognized component (E349212)

Cree LED / 4001 E. Hwy. 54, Suite 2000 / Durham, NC 27709 USA / +1.919.313.5330 / www.cree-led.com

© 2012-2024 Cree LED. The information in this document is subject to change without notice. Cree®, the Cree logo, the Cree LED logo and XLamp® are registered trademarks of Cree LED. UL® and the UL logo are registered trademarks of UL LLC. Other trademarks, product, and company names are the property of their respective owners and do not imply specific product and/or vendor endorsement, sponsorship or association.

TABLE OF CONTENTS

Characteristics 3
Order Codes Suggested for New Designs - High Efficacy 4
Order Codes Suggested for New Designs - Standard 10
Flux Characteristics - Broadcast Order Codes and Bins 14
Relative Spectral Power Distribution 15
Relative Flux vs. Junction Temperature 15
Electrical Characteristics - High Efficacy 16
Electrical Characteristics - Standard 16
Relative Flux vs. Current - High Efficacy 17
Relative Flux vs. Current - Standard 17
Relative Chromaticity vs Current and Temperature - High Efficacy 18
Relative Chromaticity vs Current and Temperature - Standard 19
Typical Spatial Distribution - High Efficacy 20
Typical Spatial Distribution - Standard 20
Thermal Design - High Efficacy 21
Thermal Design - Standard 21
Performance Groups – Luminous Flux 22
Performance Groups – Chromaticity 23
Standard Cool White Kits Plotted on ANSI Standard Chromaticity Regions 26
Standard Warm and Neutral White Kits Plotted on ANSI Standard Chromaticity Regions 28
Standard Chromaticity Kits 30
Bin and Order Code Formats 31
Reflow Soldering Characteristics 32
Notes 33
Mechanical Dimensions 35
Tape and Reel 37
Packaging 39
Appendix - Order Codes Not For New Designs 40

© 2012-2024 Cree LED. The information in this document is subject to change without notice. Cree®, the Cree logo, the Cree LED logo and XLamp® are registered trademarks of Cree LED. UL® and the UL logo are registered trademarks of UL LLC. Other trademarks, product, and company names are the property of their respective owners and do not imply specific product and/or vendor endorsement, sponsorship or association.

CHARACTERISTICS

Characteristics	Unit	Minimum	Typical	Maximum
Thermal resistance, junction to solder point - High Efficacy◊	°C/W		1.4	
Thermal resistance, junction to solder point - Standard◊	°C/W		1.4	
Viewing angle (FWHM) - High Efficacy	degrees		125	
Viewing angle (FWHM) - Standard	degrees		120	
Temperature coefficient of voltage - High Efficacy	mV/°C		-1.3	
Temperature coefficient of voltage - Standard	mV/°C		-1.3	
ESD withstand voltage (HBM per Mil-Std-883D)			Class 3B	
DC forward current - High Efficacy	mA			2000
DC forward current - Standard	mA			1500
Reverse voltage	V			1
Forward voltage (@ 350 mA, 85 °C) - High Efficacy	V		2.70	2.90
Forward voltage (@ 350 mA, 85 °C) - Standard	V		2.72	3.1
Forward voltage (@ 700 mA, 85 °C) - High Efficacy	V		2.80	
Forward voltage (@ 700 mA, 85 °C) - Standard	V		2.83	
Forward voltage (@ 1000 mA, 85 °C) - High Efficacy	V		2.87	
Forward voltage (@ 1000 mA, 85 °C) - Standard	V		2.90	
Forward voltage (@ 1500 mA, 85 °C) - High Efficacy	V		2.97	
Forward voltage (@ 1500 mA, 85 °C) - Standard	V		3.02	
LED junction temperature	°C			150

Note:

◊ Thermal resistance measurement was performed per the JEDEC JESD51-14 standard. See the Thermal Resistance Measurement application note for more details.

© 2012-2024 Cree LED. The information in this document is subject to change without notice. Cree®, the Cree logo, the Cree LED logo and XLamp® are registered trademarks of Cree LED. UL® and the UL logo are registered trademarks of UL LLC. Other trademarks, product, and company names are the property of their respective owners and do not imply specific product and/or vendor endorsement, sponsorship or association.

ORDER CODES SUGGESTED FOR NEW DESIGNS - HIGH EFFICACY (T_J = 85 °C)

The following table provides order codes for XLamp High-Efficacy XP-G2 LEDs. For a complete description of the order code nomenclature, please see the Bin and Order Code Formats section (page 31). For definitions of the chromaticity kits, please see the Standard Chromaticity Kits section (page 30).

Chromaticity		Minimum Luminous Flux (lm) @ 350 mA			Order Codes		
Kit	CCT	Code	Flux (lm) @ 85 °C	Flux (lm) @ 25 °C*	70 CRI Minimum	80 CRI Minimum	90 CRI Minimum
DT	7000 K	S5	172	189	XPGBWT-BE-0000-00MDT		
		S4	164	180	XPGBWT-BE-0000-00LDT	XPGBWT-HE-0000-00LDT	
		S3	156	171	XPGBWT-BE-0000-00KDT	XPGBWT-HE-0000-00KDT	
		S2	148	163		XPGBWT-HE-0000-00JDT	
E1	6500 K	S6	180	198	XPGBWT-BE-0000-00NE1		
		S5	172	189	XPGBWT-BE-0000-00ME1		
		S4	164	180	XPGBWT-BE-0000-00LE1	XPGBWT-HE-0000-00LE1	
		S3	156	171	XPGBWT-BE-0000-00KE1	XPGBWT-HE-0000-00KE1	
		S2	148	163		XPGBWT-HE-0000-00JE1	
51	6200 K	S6	180	198	XPGBWT-BE-0000-00N51		
		S5	172	189	XPGBWT-BE-0000-00M51		
		S4	164	180	XPGBWT-BE-0000-00L51	XPGBWT-HE-0000-00L51	
		S3	156	171	XPGBWT-BE-0000-00K51	XPGBWT-HE-0000-00K51	
		S2	148	163		XPGBWT-HE-0000-00J51	
		R5	139	153			XPGBWT-UE-0000-00H51
		R4	130	143			XPGBWT-UE-0000-00G51
		R3	122	134			XPGBWT-UE-0000-00F51
		R2	114	125			

Notes

- For additional order codes NOT recommended for new designs please see the Appendix section starting on page 40 .
- Cree LED maintains a tolerance of ±7% on flux and power measurements, ±0.005 on chromaticity (CCx, CCy) measurements and a tolerance of ±2 on CRI measurements. See the Measurements section (page 33).
- XP-G2 LED order codes specify only a minimum flux bin and not a maximum. Cree LED may ship reels in flux bins higher than the minimum specified by the order code without advance notice. Shipments will always adhere to the chromaticity bin restrictions specified by the order code.

* Flux values @ 25 °C are calculated and for reference only.

© 2012-2024 Cree LED. The information in this document is subject to change without notice. Cree®, the Cree logo, the Cree LED logo and XLamp® are registered trademarks of Cree LED. UL® and the UL logo are registered trademarks of UL LLC. Other trademarks, product, and company names are the property of their respective owners and do not imply specific product and/or vendor endorsement, sponsorship or association.

ORDER CODES SUGGESTED FOR NEW DESIGNS - HIGH EFFICACY (T_J = 85 °C) - CONTINUED

Chromaticity		Minimum Luminous Flux (lm) @ 350 mA			Order Codes		
Kit	CCT	Code	Flux (lm) @ 85 °C	Flux (lm) @ 25 °C*	70 CRI Minimum	80 CRI Minimum	90 CRI Minimum
DV	6000 K	S6	180	198	XPGBWT-BE-0000-00NDV		
		S5	172	189	XPGBWT-BE-0000-00MDV		
		S4	164	180	XPGBWT-BE-0000-00LDV	XPGBWT-HE-0000-00LDV	
		S3	156	171	XPGBWT-BE-0000-00KDV	XPGBWT-HE-0000-00KDV	
		S2	148	163		XPGBWT-HE-0000-00JDV	
		R5	139	153			XPGBWT-UE-0000-00HDV
		R4	130	143			XPGBWT-UE-0000-00GDV
		R3	122	134			XPGBWT-UE-0000-00FDV
50	6000 K	S6	180	198	XPGBWT-BE-0000-00N50		
		S5	172	189	XPGBWT-BE-0000-00M50		
		S4	164	180	XPGBWT-BE-0000-00L50	XPGBWT-HE-0000-00L50	
		S3	156	171	XPGBWT-BE-0000-00K50	XPGBWT-HE-0000-00K50	
		S2	148	163		XPGBWT-HE-0000-00J50	
		R5	139	153			XPGBWT-UE-0000-00H50
		R4	130	143			XPGBWT-UE-0000-00G50
		R3	122	134			XPGBWT-UE-0000-00F50
E2	5700 K	S6	180	198	XPGBWT-BE-0000-00NE2		
		S5	172	189	XPGBWT-BE-0000-00ME2		
		S4	164	180	XPGBWT-BE-0000-00LE2	XPGBWT-HE-0000-00LE2	
		S3	156	171	XPGBWT-BE-0000-00KE2	XPGBWT-HE-0000-00KE2	
		S2	148	163		XPGBWT-HE-0000-00JE2	
		R5	139	153			XPGBWT-UE-0000-00HE2
		R4	130	143			XPGBWT-UE-0000-00GE2
		R3	122	134			XPGBWT-UE-0000-00FE2

Notes

- For additional order codes NOT recommended for new designs please see the Appendix section starting on page 40 .
- Cree LED maintains a tolerance of ±7% on flux and power measurements, ±0.005 on chromaticity (CCx, CCy) measurements and a tolerance of ±2 on CRI measurements. See the Measurements section (page 33).
- XP-G2 LED order codes specify only a minimum flux bin and not a maximum. Cree LED may ship reels in flux bins higher than the minimum specified by the order code without advance notice. Shipments will always adhere to the chromaticity bin restrictions specified by the order code.

* Flux values @ 25 °C are calculated and for reference only.

© 2012-2024 Cree LED. The information in this document is subject to change without notice. Cree®, the Cree logo, the Cree LED logo and XLamp® are registered trademarks of Cree LED. UL® and the UL logo are registered trademarks of UL LLC. Other trademarks, product, and company names are the property of their respective owners and do not imply specific product and/or vendor endorsement, sponsorship or association.

ORDER CODES SUGGESTED FOR NEW DESIGNS - HIGH EFFICACY (T_J = 85 °C) - CONTINUED

Chromaticity		Minimum Luminous Flux (lm) @ 350 mA			Order Codes		
Kit	CCT	Code	Flux (lm) @ 85 °C	Flux (lm) @ 25 °C*	70 CRI Minimum	80 CRI Minimum	90 CRI Minimum
E3	5000 K	S6	180	198	XPGBWT-BE-0000-00NE3		
		S5	172	189	XPGBWT-BE-0000-00ME3	XPGBWT-HE-0000-00ME3	
		S4	164	180	XPGBWT-BE-0000-00LE3	XPGBWT-HE-0000-00LE3	
		S3	156	171	XPGBWT-BE-0000-00KE3	XPGBWT-HE-0000-00KE3	
		S2	148	163		XPGBWT-HE-0000-00JE3	XPGBWT-UE-0000-00JE3
		R5	139	153			XPGBWT-UE-0000-00HE3
		R4	130	143			XPGBWT-UE-0000-00GE3
		R3	122	134			XPGBWT-UE-0000-00FE3
F4	4750 K	S6	180	198	XPGBWT-BE-0000-00NF4		
		S5	172	189	XPGBWT-BE-0000-00MF4	XPGBWT-HE-0000-00MF4	
		S4	164	180	XPGBWT-BE-0000-00LF4	XPGBWT-HE-0000-00LF4	
		S3	156	171	XPGBWT-BE-0000-00KF4	XPGBWT-HE-0000-00KF4	
		S2	148	163		XPGBWT-HE-0000-00JF4	XPGBWT-UE-0000-00JF4
		R5	139	153			XPGBWT-UE-0000-00HF4
		R4	130	143			XPGBWT-UE-0000-00GF4
		R3	122	134			XPGBWT-UE-0000-00FF4
E4	4500 K	S6	180	198	XPGBWT-BE-0000-00NE4		
		S5	172	189	XPGBWT-BE-0000-00ME4		
		S4	164	180	XPGBWT-BE-0000-00LE4	XPGBWT-HE-0000-00LE4	
		S3	156	171	XPGBWT-BE-0000-00KE4	XPGBWT-HE-0000-00KE4	
		S2	148	163		XPGBWT-HE-0000-00JE4	
		R5	139	153			XPGBWT-UE-0000-00HE4
		R4	130	143			XPGBWT-UE-0000-00GE4
		R3	122	134			XPGBWT-UE-0000-00FE4

Notes

- For additional order codes NOT recommended for new designs please see the Appendix section starting on page 40 .
- Cree LED maintains a tolerance of ±7% on flux and power measurements, ±0.005 on chromaticity (CCx, CCy) measurements and a tolerance of ±2 on CRI measurements. See the Measurements section (page 33).
- XP-G2 LED order codes specify only a minimum flux bin and not a maximum. Cree LED may ship reels in flux bins higher than the minimum specified by the order code without advance notice. Shipments will always adhere to the chromaticity bin restrictions specified by the order code.

* Flux values @ 25 °C are calculated and for reference only.

© 2012-2024 Cree LED. The information in this document is subject to change without notice. Cree®, the Cree logo, the Cree LED logo and XLamp® are registered trademarks of Cree LED. UL® and the UL logo are registered trademarks of UL LLC. Other trademarks, product, and company names are the property of their respective owners and do not imply specific product and/or vendor endorsement, sponsorship or association.

ORDER CODES SUGGESTED FOR NEW DESIGNS - HIGH EFFICACY (T_J = 85 °C) - CONTINUED

Chromaticity		Minimum Luminous Flux (lm) @ 350 mA			Order Codes		
Kit	CCT	Code	Flux (lm) @ 85 °C	Flux (lm) @ 25 °C*	70 CRI Minimum	80 CRI Minimum	90 CRI Minimum
F5	4250 K	S6	180	198	XPGBWT-BE-0000-00NF5		
		S5	172	189	XPGBWT-BE-0000-00MF5		
		S4	164	180	XPGBWT-BE-0000-00LF5	XPGBWT-HE-0000-00LF5	
		S3	156	171	XPGBWT-BE-0000-00KF5	XPGBWT-HE-0000-00KF5	
		S2	148	163		XPGBWT-HE-0000-00JF5	
		R5	139	153			XPGBWT-UE-0000-00HF5
		R4	130	143			XPGBWT-UE-0000-00GF5
		R3	122	134			XPGBWT-UE-0000-00FF5
E5	4000 K	S6	180	198	XPGBWT-BE-0000-00NE5		
		S5	172	189	XPGBWT-BE-0000-00ME5		
		S4	164	180	XPGBWT-BE-0000-00LE5	XPGBWT-HE-0000-00LE5	
		S3	156	171	XPGBWT-BE-0000-00KE5	XPGBWT-HE-0000-00KE5	
		S2	148	163		XPGBWT-HE-0000-00JE5	
		R5	139	153			XPGBWT-UE-0000-00HE5
		R4	130	143			XPGBWT-UE-0000-00GE5
		R3	122	134			XPGBWT-UE-0000-00FE5
F6	3750 K	S5	172	189	XPGBWT-BE-0000-00MF6		
		S4	164	180	XPGBWT-BE-0000-00LF6	XPGBWT-HE-0000-00LF6	
		S3	156	171	XPGBWT-BE-0000-00KF6	XPGBWT-HE-0000-00KF6	
		S2	148	163		XPGBWT-HE-0000-00JF6	
		R5	139	153			XPGBWT-UE-0000-00HF6
		R4	130	143			XPGBWT-UE-0000-00GF6
		R3	122	134			XPGBWT-UE-0000-00FF6

Notes

- For additional order codes NOT recommended for new designs please see the Appendix section starting on page 40 .
- Cree LED maintains a tolerance of ±7% on flux and power measurements, ±0.005 on chromaticity (CCx, CCy) measurements and a tolerance of ±2 on CRI measurements. See the Measurements section (page 33).
- XP-G2 LED order codes specify only a minimum flux bin and not a maximum. Cree LED may ship reels in flux bins higher than the minimum specified by the order code without advance notice. Shipments will always adhere to the chromaticity bin restrictions specified by the order code.

* Flux values @ 25 °C are calculated and for reference only.

© 2012-2024 Cree LED. The information in this document is subject to change without notice. Cree®, the Cree logo, the Cree LED logo and XLamp® are registered trademarks of Cree LED. UL® and the UL logo are registered trademarks of UL LLC. Other trademarks, product, and company names are the property of their respective owners and do not imply specific product and/or vendor endorsement, sponsorship or association.

ORDER CODES SUGGESTED FOR NEW DESIGNS - HIGH EFFICACY (T_J = 85 °C) - CONTINUED

Chromaticity		Minimum Luminous Flux (lm) @ 350 mA			Order Codes		
Kit	CCT	Code	Flux (lm) @ 85 °C	Flux (lm) @ 25 °C*	70 CRI Minimum	80 CRI Minimum	90 CRI Minimum
E6	3500 K	S5	172	189	XPGBWT-BE-0000-00ME6		
		S4	164	180	XPGBWT-BE-0000-00LE6	XPGBWT-HE-0000-00LE6	
		S3	156	171	XPGBWT-BE-0000-00KE6	XPGBWT-HE-0000-00KE6	
		S2	148	163		XPGBWT-HE-0000-00JE6	
		R5	139	153			XPGBWT-UE-0000-00HE6
		R4	130	143			XPGBWT-UE-0000-00GE6
		R3	122	134			XPGBWT-UE-0000-00FE6
F7	3250 K	S5	172	189	XPGBWT-BE-0000-00MF7		
		S4	164	180	XPGBWT-BE-0000-00LF7		
		S3	156	171	XPGBWT-BE-0000-00KF7	XPGBWT-HE-0000-00KF7	
		S2	148	163		XPGBWT-HE-0000-00JF7	
		R5	139	153		XPGBWT-HE-0000-00HF7	
		R4	130	143			XPGBWT-UE-0000-00GF7
		R3	122	134			XPGBWT-UE-0000-00FF7
		R2	114	125			XPGBWT-UE-0000-00EF7
E7	3000 K	S5	172	189	XPGBWT-BE-0000-00ME7		
		S4	164	180	XPGBWT-BE-0000-00LE7		
		S3	156	171	XPGBWT-BE-0000-00KE7	XPGBWT-HE-0000-00KE7	
		S2	148	163		XPGBWT-HE-0000-00JE7	
		R5	139	153		XPGBWT-HE-0000-00HE7	
		R4	130	143			XPGBWT-UE-0000-00GE7
		R3	122	134			XPGBWT-UE-0000-00FE7
		R2	114	125			XPGBWT-UE-0000-00EE7

Notes

- For additional order codes NOT recommended for new designs please see the Appendix section starting on page 40 .
- Cree LED maintains a tolerance of ±7% on flux and power measurements, ±0.005 on chromaticity (CCx, CCy) measurements and a tolerance of ±2 on CRI measurements. See the Measurements section (page 33).
- XP-G2 LED order codes specify only a minimum flux bin and not a maximum. Cree LED may ship reels in flux bins higher than the minimum specified by the order code without advance notice. Shipments will always adhere to the chromaticity bin restrictions specified by the order code.

* Flux values @ 25 °C are calculated and for reference only.

© 2012-2024 Cree LED. The information in this document is subject to change without notice. Cree®, the Cree logo, the Cree LED logo and XLamp® are registered trademarks of Cree LED. UL® and the UL logo are registered trademarks of UL LLC. Other trademarks, product, and company names are the property of their respective owners and do not imply specific product and/or vendor endorsement, sponsorship or association.

ORDER CODES SUGGESTED FOR NEW DESIGNS - HIGH EFFICACY (T_J = 85 °C) - CONTINUED

Chromaticity		Minimum Luminous Flux (lm) @ 350 mA			Order Codes		
Kit	CCT	Code	Flux (lm) @ 85 °C	Flux (lm) @ 25 °C*	70 CRI Minimum	80 CRI Minimum	90 CRI Minimum
F8	2850 K	S4	164	180	XPGBWT-BE-0000-00LF8		
		S3	156	171	XPGBWT-BE-0000-00KF8		
		S2	148	163		XPGBWT-HE-0000-00JF8	
		R5	139	153		XPGBWT-HE-0000-00HF8	
		R4	130	143			
		R3	122	134			XPGBWT-UE-0000-00FF8
		R2	114	125			XPGBWT-UE-0000-00EF8
E8	2700 K	S4	164	180	XPGBWT-BE-0000-00LE8		
		S3	156	171	XPGBWT-BE-0000-00KE8		
		S2	148	163		XPGBWT-HE-0000-00JE8	
		R5	139	153		XPGBWT-HE-0000-00HE8	
		R4	130	143			
		R3	122	134			XPGBWT-UE-0000-00FE8
		R2	114	125			XPGBWT-UE-0000-00EE8

Notes

- For additional order codes NOT recommended for new designs please see the Appendix section starting on page 40 .
- Cree LED maintains a tolerance of ±7% on flux and power measurements, ±0.005 on chromaticity (CCx, CCy) measurements and a tolerance of ±2 on CRI measurements. See the Measurements section (page 33).
- XP-G2 LED order codes specify only a minimum flux bin and not a maximum. Cree LED may ship reels in flux bins higher than the minimum specified by the order code without advance notice. Shipments will always adhere to the chromaticity bin restrictions specified by the order code.

* Flux values @ 25 °C are calculated and for reference only.

© 2012-2024 Cree LED. The information in this document is subject to change without notice. Cree®, the Cree logo, the Cree LED logo and XLamp® are registered trademarks of Cree LED. UL® and the UL logo are registered trademarks of UL LLC. Other trademarks, product, and company names are the property of their respective owners and do not imply specific product and/or vendor endorsement, sponsorship or association.

ORDER CODES SUGGESTED FOR NEW DESIGNS - STANDARD (T_J = 85 °C)

The following table provides order codes for XLamp Standard XP-G2 LEDs. For a complete description of the order code nomenclature, please see the Bin and Order Code Formats section (page 31). For definitions of the chromaticity kits, please see the Standard Chromaticity Kits section (page 30).

Chromaticity		Minimum Luminous Flux (lm) @ 350 mA			Order Codes
Kit	CCT	Code	Flux (lm) @ 85 °C	Flux (lm) @ 25 °C*	70 CRI Typical
51	6200 K	S5	172	189	XPGBWT-L1-0000-00M51
		S4	164	180	XPGBWT-L1-0000-00L51
		S3	156	171	XPGBWT-L1-0000-00K51
		S2	148	163	XPGBWT-L1-0000-00J51
53	6000 K	S5	172	189	XPGBWT-L1-0000-00M53
		S4	164	180	XPGBWT-L1-0000-00L53
		S3	156	171	XPGBWT-L1-0000-00K53
		S2	148	163	XPGBWT-L1-0000-00J53
50	6200 K	S5	172	189	XPGBWT-L1-0000-00M50
		S4	164	180	XPGBWT-L1-0000-00L50
		S3	156	171	XPGBWT-L1-0000-00K50
		S2	148	163	XPGBWT-L1-0000-00J50
E1	6500 K	S5	172	189	XPGBWT-L1-0000-00ME1
		S4	164	180	XPGBWT-L1-0000-00LE1
		S3	156	171	XPGBWT-L1-0000-00KE1
		S2	148	163	XPGBWT-L1-0000-00JE1
E2	5700 K	S5	172	189	XPGBWT-L1-0000-00ME2
		S4	164	180	XPGBWT-L1-0000-00LE2
		S3	156	171	XPGBWT-L1-0000-00KE2
		S2	148	163	XPGBWT-L1-0000-00JE2

Notes

- For additional order codes NOT recommended for new designs please see the Appendix section starting on page 40 .
- Cree LED maintains a tolerance of ±7% on flux and power measurements, ±0.005 on chromaticity (CCx, CCy) measurements and a tolerance of ±2 on CRI measurements. See the Measurements section (page 33).
- XP-G2 LED order codes specify only a minimum flux bin and not a maximum. Cree LED may ship reels in flux bins higher than the minimum specified by the order code without advance notice. Shipments will always adhere to the chromaticity bin restrictions specified by the order code.

* Flux values @ 25 °C are calculated and for reference only.

© 2012-2024 Cree LED. The information in this document is subject to change without notice. Cree®, the Cree logo, the Cree LED logo and XLamp® are registered trademarks of Cree LED. UL® and the UL logo are registered trademarks of UL LLC. Other trademarks, product, and company names are the property of their respective owners and do not imply specific product and/or vendor endorsement, sponsorship or association.

ORDER CODES SUGGESTED FOR NEW DESIGNS - STANDARD (T_J = 85 °C) - CONTINUED

Chromaticity		Minimum Luminous Flux (lm) @ 350 mA			Order Codes	
Kit	CCT	Code	Flux (lm) @ 85 °C	Flux (lm) @25 °C*	70 CRI Typical	80 CRI Minimum
E3	5000 K	S5	172	189	XPGBWT-01-0000-00ME3	
		S4	164	180	XPGBWT-01-0000-00LE3	
		S3	156	171	XPGBWT-01-0000-00KE3	
		S2	148	163	XPGBWT-01-0000-00JE3	
F4	4750 K	S5	172	189	XPGBWT-01-0000-00MF4	
		S4	164	180	XPGBWT-01-0000-00LF4	
		S3	156	171	XPGBWT-01-0000-00KF4	
		S2	148	163	XPGBWT-01-0000-00JF4	
E4	4500 K	S5	172	189	XPGBWT-01-0000-00ME4	
		S4	164	180	XPGBWT-01-0000-00LE4	
		S3	156	171	XPGBWT-01-0000-00KE4	
		S2	148	163	XPGBWT-01-0000-00JE4	
F5	4250 K	S5	172	189	XPGBWT-01-0000-00MF5	
		S4	164	180	XPGBWT-01-0000-00LF5	
		S3	156	171	XPGBWT-01-0000-00KF5	
		S2	148	163	XPGBWT-01-0000-00JF5	
E5	4000 K	S5	172	189	XPGBWT-01-0000-00ME5	
		S4	164	180	XPGBWT-01-0000-00LE5	
		S3	156	171	XPGBWT-01-0000-00KE5	XPGBWT-H1-0000-00KE5
		S2	148	163	XPGBWT-01-0000-00JE5	XPGBWT-H1-0000-00JE5
		R5	139	153		XPGBWT-H1-0000-00HE5
		R4	130	143		XPGBWT-H1-0000-00GE5
Z5	4000 K	S3	156	171		XPGBWT-H1-0000-00KZ5
		S2	148	163		XPGBWT-H1-0000-00JZ5
		R5	139	153		XPGBWT-H1-0000-00HZ5
		R4	130	143		XPGBWT-H1-0000-00GZ5

Notes

- For additional order codes NOT recommended for new designs please see the Appendix section starting on page 40 .
- Cree LED maintains a tolerance of ±7% on flux and power measurements, ±0.005 on chromaticity (CCx, CCy) measurements and a tolerance of ±2 on CRI measurements. See the Measurements section (page 33).
- XP-G2 LED order codes specify only a minimum flux bin and not a maximum. Cree LED may ship reels in flux bins higher than the minimum specified by the order code without advance notice. Shipments will always adhere to the chromaticity bin restrictions specified by the order code.

* Flux values @ 25 °C are calculated and for reference only.

© 2012-2024 Cree LED. The information in this document is subject to change without notice. Cree®, the Cree logo, the Cree LED logo and XLamp® are registered trademarks of Cree LED. UL® and the UL logo are registered trademarks of UL LLC. Other trademarks, product, and company names are the property of their respective owners and do not imply specific product and/or vendor endorsement, sponsorship or association.

ORDER CODES SUGGESTED FOR NEW DESIGNS - STANDARD (T_J = 85 °C) - CONTINUED

Chromaticity		Minimum Luminous Flux (lm) @ 350 mA			Order Codes			
Kit	CCT	Code	Flux (lm) @ 85 °C	Flux (lm) @25 °C*	70 CRI Typical	80 CRI Typical	80 CRI Minimum	90 CRI Minimum
F6	3750 K	S4	164	180	XPGBWT-01-0000-00LF6			
		S3	156	171	XPGBWT-01-0000-00KF6	XPGBWT-L1-0000-00KF6	XPGBWT-H1-0000-00KF6	
		S2	148	163	XPGBWT-01-0000-00JF6	XPGBWT-L1-0000-00JF6	XPGBWT-H1-0000-00JF6	
		R5	139	153	XPGBWT-01-0000-00HF6	XPGBWT-L1-0000-00HF6	XPGBWT-H1-0000-00HF6	
		R4	130	143		XPGBWT-L1-0000-00GF6	XPGBWT-H1-0000-00GF6	
E6	3500 K	S4	164	180	XPGBWT-01-0000-00LE6			
		S3	156	171	XPGBWT-01-0000-00KE6			
		S2	148	163	XPGBWT-01-0000-00JE6	XPGBWT-L1-0000-00JE6	XPGBWT-H1-0000-00JE6	
		R5	139	153	XPGBWT-01-0000-00HE6	XPGBWT-L1-0000-00HE6	XPGBWT-H1-0000-00HE6	
		R4	130	143		XPGBWT-L1-0000-00GE6	XPGBWT-H1-0000-00GE6	
Z6	3500 K	S2	148	163		XPGBWT-L1-0000-00JZ6	XPGBWT-H1-0000-00JZ6	
		R5	139	153		XPGBWT-L1-0000-00HZ6	XPGBWT-H1-0000-00HZ6	
		R4	130	143		XPGBWT-L1-0000-00GZ6	XPGBWT-H1-0000-00GZ6	
F7	3250 K	S4	164	180	XPGBWT-01-0000-00LF7			
		S3	156	171	XPGBWT-01-0000-00KF7			
		S2	148	163	XPGBWT-01-0000-00JF7	XPGBWT-L1-0000-00JF7	XPGBWT-H1-0000-00JF7	
		R5	139	153	XPGBWT-01-0000-00HF7	XPGBWT-L1-0000-00HF7	XPGBWT-H1-0000-00HF7	
		R4	130	143		XPGBWT-L1-0000-00GF7	XPGBWT-H1-0000-00GF7	
E7	3000 K	S3	156	171	XPGBWT-01-0000-00KE7			
		S2	148	163	XPGBWT-01-0000-00JE7	XPGBWT-L1-0000-00JE7	XPGBWT-H1-0000-00JE7	
		R5	139	153	XPGBWT-01-0000-00HE7	XPGBWT-L1-0000-00HE7	XPGBWT-H1-0000-00HE7	
		R4	130	143	XPGBWT-01-0000-00GE7	XPGBWT-L1-0000-00GE7	XPGBWT-H1-0000-00GE7	XPGBWT-U1-0000-00GE7
		R3	122	134		XPGBWT-L1-0000-00FE7	XPGBWT-H1-0000-00FE7	XPGBWT-U1-0000-00FE7
		R2	114	125				XPGBWT-U1-0000-00EE7
		Q5	107	118				XPGBWT-U1-0000-00DE7

Notes

- For additional order codes NOT recommended for new designs please see the Appendix section starting on page 40 .
- Cree LED maintains a tolerance of ±7% on flux and power measurements, ±0.005 on chromaticity (CCx, CCy) measurements and a tolerance of ±2 on CRI measurements. See the Measurements section (page 33).
- XP-G2 LED order codes specify only a minimum flux bin and not a maximum. Cree LED may ship reels in flux bins higher than the minimum specified by the order code without advance notice. Shipments will always adhere to the chromaticity bin restrictions specified by the order code.

* Flux values @ 25 °C are calculated and for reference only.

© 2012-2024 Cree LED. The information in this document is subject to change without notice. Cree®, the Cree logo, the Cree LED logo and XLamp® are registered trademarks of Cree LED. UL® and the UL logo are registered trademarks of UL LLC. Other trademarks, product, and company names are the property of their respective owners and do not imply specific product and/or vendor endorsement, sponsorship or association.

ORDER CODES SUGGESTED FOR NEW DESIGNS - STANDARD (T_J = 85 °C) - CONTINUED

Chromaticity		Minimum Luminous Flux (lm) @ 350 mA			Order Codes			
Kit	CCT	Code	Flux (lm) @ 85 °C	Flux (lm) @25 °C*	70 CRI Typical	80 CRI Typical	80 CRI Minimum	90 CRI Minimum
Z7	3000 K	R5	139	153		XPGBWT-L1-0000-00HZ7	XPGBWT-H1-0000-00HZ7	
		R4	130	143		XPGBWT-L1-0000-00GZ7	XPGBWT-H1-0000-00GZ7	
		R3	122	134		XPGBWT-L1-0000-00FZ7	XPGBWT-H1-0000-00FZ7	XPGBWT-U1-0000-00FZ7
		R2	114	125				XPGBWT-U1-0000-00EZ7
		Q5	107	118				XPGBWT-U1-0000-00DZ7
F8	2850 K	R5	139	153		XPGBWT-L1-0000-00HF8	XPGBWT-H1-0000-00HF8	
		R4	130	143		XPGBWT-L1-0000-00GF8	XPGBWT-H1-0000-00GF8	
		R3	122	134		XPGBWT-L1-0000-00FF8	XPGBWT-H1-0000-00FF8	XPGBWT-U1-0000-00FF8
		R2	114	125				XPGBWT-U1-0000-00EF8
		Q5	107	118				XPGBWT-U1-0000-00DF8
E8	2700 K	R5	139	153		XPGBWT-L1-0000-00HE8	XPGBWT-H1-0000-00HE8	
		R4	130	143		XPGBWT-L1-0000-00GE8	XPGBWT-H1-0000-00GE8	
		R3	122	134		XPGBWT-L1-0000-00FE8	XPGBWT-H1-0000-00FE8	
		R2	114	125				XPGBWT-U1-0000-00EE8
		Q5	107	118				XPGBWT-U1-0000-00DE8
		Q4	100	110				XPGBWT-U1-0000-00CE8
Z8	2700 K	R4	130	143		XPGBWT-L1-0000-00GZ8	XPGBWT-H1-0000-00GZ8	
		R3	122	134		XPGBWT-L1-0000-00FZ8	XPGBWT-H1-0000-00FZ8	
		R2	114	125		XPGBWT-L1-0000-00EZ8	XPGBWT-H1-0000-00EZ8	
		Q5	107	118				XPGBWT-U1-0000-00DZ8
		Q4	100	110				XPGBWT-U1-0000-00CZ8
		Q3	93.9	103				XPGBWT-U1-0000-00BZ8

Notes

- For additional order codes NOT recommended for new designs please see the Appendix section starting on page 40 .
- Cree LED maintains a tolerance of ±7% on flux and power measurements, ±0.005 on chromaticity (CCx, CCy) measurements and a tolerance of ±2 on CRI measurements. See the Measurements section (page 33).
- XP-G2 LED order codes specify only a minimum flux bin and not a maximum. Cree LED may ship reels in flux bins higher than the minimum specified by the order code without advance notice. Shipments will always adhere to the chromaticity bin restrictions specified by the order code.

* Flux values @ 25 °C are calculated and for reference only.

© 2012-2024 Cree LED. The information in this document is subject to change without notice. Cree®, the Cree logo, the Cree LED logo and XLamp® are registered trademarks of Cree LED. UL® and the UL logo are registered trademarks of UL LLC. Other trademarks, product, and company names are the property of their respective owners and do not imply specific product and/or vendor endorsement, sponsorship or association.

FLUX CHARACTERISTICS - BROADCAST ORDER CODES AND BINS (T_J = 85 °C)

The following table provides order codes for XLamp XP-G2 Broadcast LEDs. For a complete description of the order code nomenclature, please see the Bin and Order Code Formats section (page 31). For definitions of the chromaticity kits, please see the Standard Chromaticity Kits section (page 30).

Chromaticity		Minimum Luminous Flux (lm) @ 1050 mA			Order Codes	
Kit	CCT	Flux Bin	Flux (lm) @ 85 °C	Flux (lm) @ 25 °C*	90 CRI Minimum 90 TLCI Minimum	95 CRI Minimum 95 TLCI Minimum
E2	5700 K	R4	130	143	XPGBWT-U1-B001-A0GE2	
		R3	122	134		XPGBWT-Z1-B001-A0FE2

Notes

- For additional order codes NOT recommended for new designs please see the Appendix section starting on page 40 .
- Cree LED maintains a tolerance of ±7% on flux and power measurements, ±0.005 on chromaticity (CCx, CCy) measurements and a tolerance of ±2 on CRI measurements. See the Measurements section (page 33).
- XP-G2 LED order codes specify only a minimum flux bin and not a maximum. Cree LED may ship reels in flux bins higher than the minimum specified by the order code without advance notice. Shipments will always adhere to the chromaticity bin restrictions specified by the order code.

* Flux values @ 25 °C are calculated and for reference only.

© 2012-2024 Cree LED. The information in this document is subject to change without notice. Cree®, the Cree logo, the Cree LED logo and XLamp® are registered trademarks of Cree LED. UL® and the UL logo are registered trademarks of UL LLC. Other trademarks, product, and company names are the property of their respective owners and do not imply specific product and/or vendor endorsement, sponsorship or association.

RELATIVE SPECTRAL POWER DISTRIBUTION

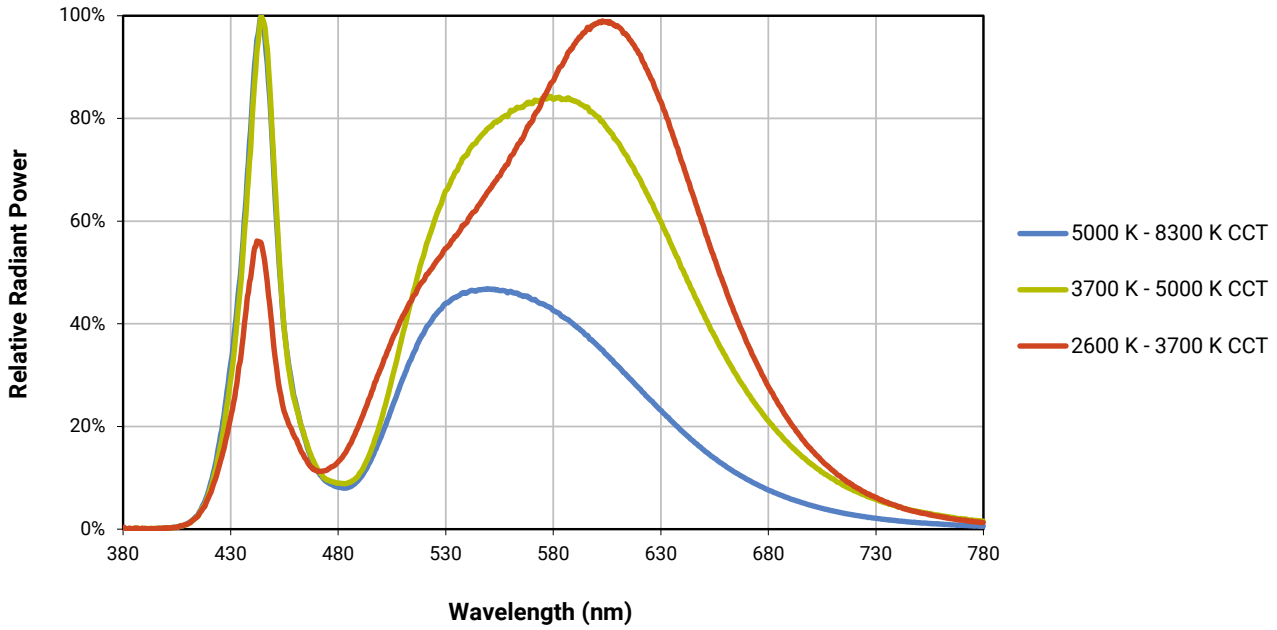

RELATIVE FLUX VS. JUNCTION TEMPERATURE (I_F = 350 mA)

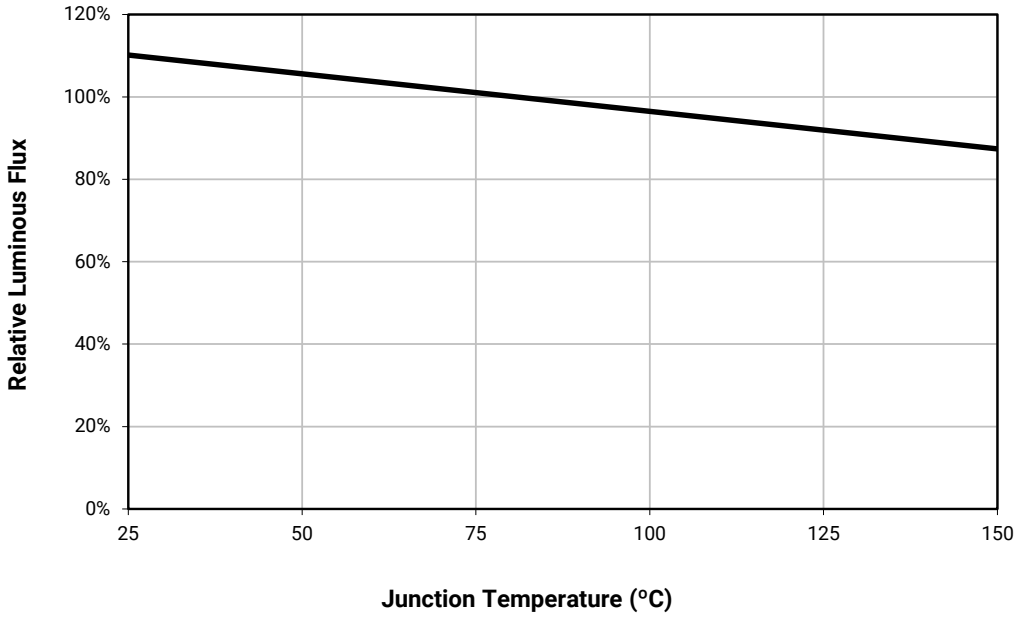

© 2012-2024 Cree LED. The information in this document is subject to change without notice. Cree®, the Cree logo, the Cree LED logo and XLamp® are registered trademarks of Cree LED. UL® and the UL logo are registered trademarks of UL LLC. Other trademarks, product, and company names are the property of their respective owners and do not imply specific product and/or vendor endorsement, sponsorship or association.

ELECTRICAL CHARACTERISTICS - HIGH EFFICACY (T_J = 85 °C)

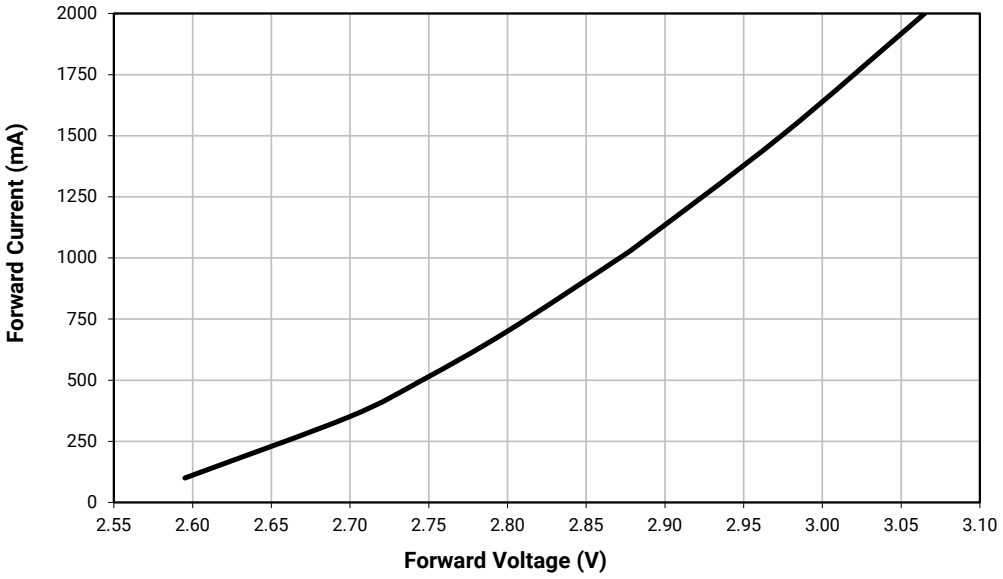

ELECTRICAL CHARACTERISTICS - STANDARD (T_J = 85 °C)

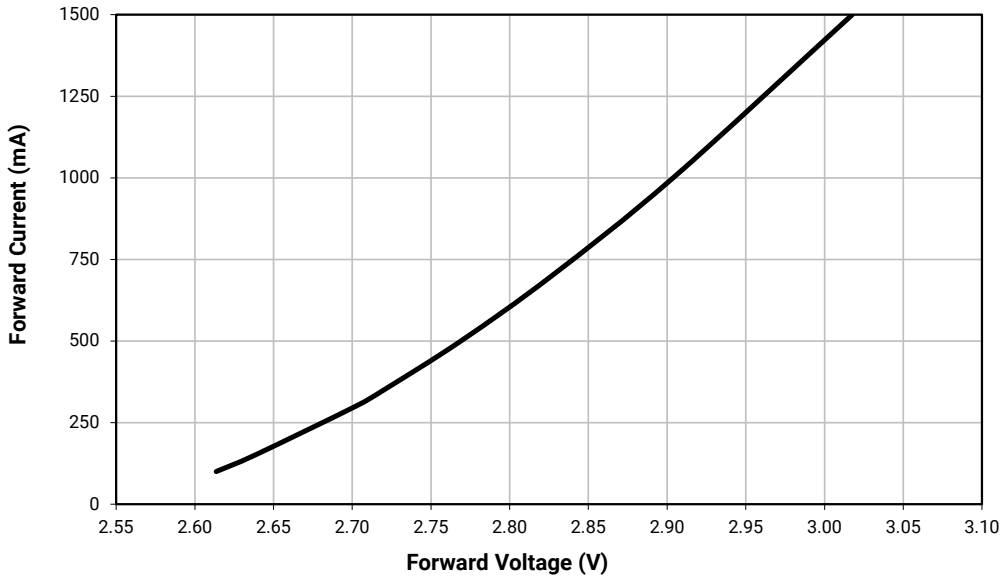

© 2012-2024 Cree LED. The information in this document is subject to change without notice. Cree®, the Cree logo, the Cree LED logo and XLamp® are registered trademarks of Cree LED. UL® and the UL logo are registered trademarks of UL LLC. Other trademarks, product, and company names are the property of their respective owners and do not imply specific product and/or vendor endorsement, sponsorship or association.

RELATIVE FLUX VS. CURRENT - HIGH EFFICACY (T_J = 85 °C)

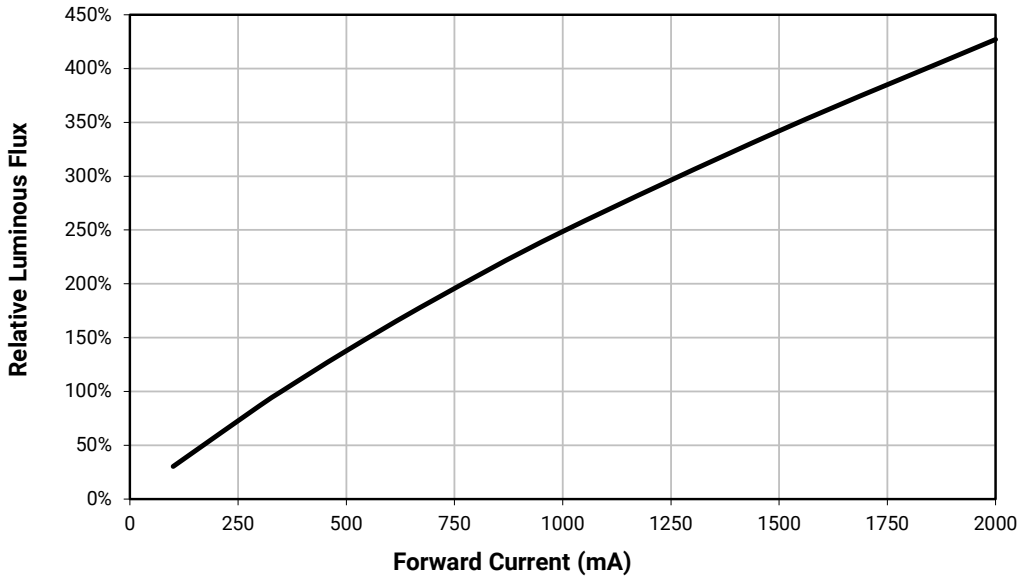

RELATIVE FLUX VS. CURRENT - STANDARD (T_J = 85 °C)

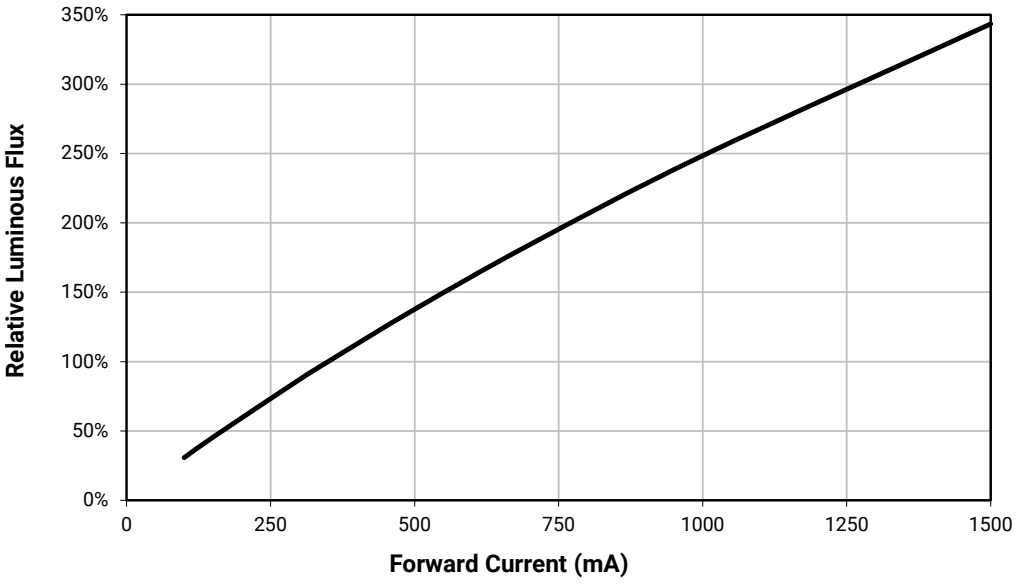

© 2012-2024 Cree LED. The information in this document is subject to change without notice. Cree®, the Cree logo, the Cree LED logo and XLamp® are registered trademarks of Cree LED. UL® and the UL logo are registered trademarks of UL LLC. Other trademarks, product, and company names are the property of their respective owners and do not imply specific product and/or vendor endorsement, sponsorship or association.

RELATIVE CHROMATICITY VS CURRENT AND TEMPERATURE - HIGH EFFICACY (WARM WHITE)

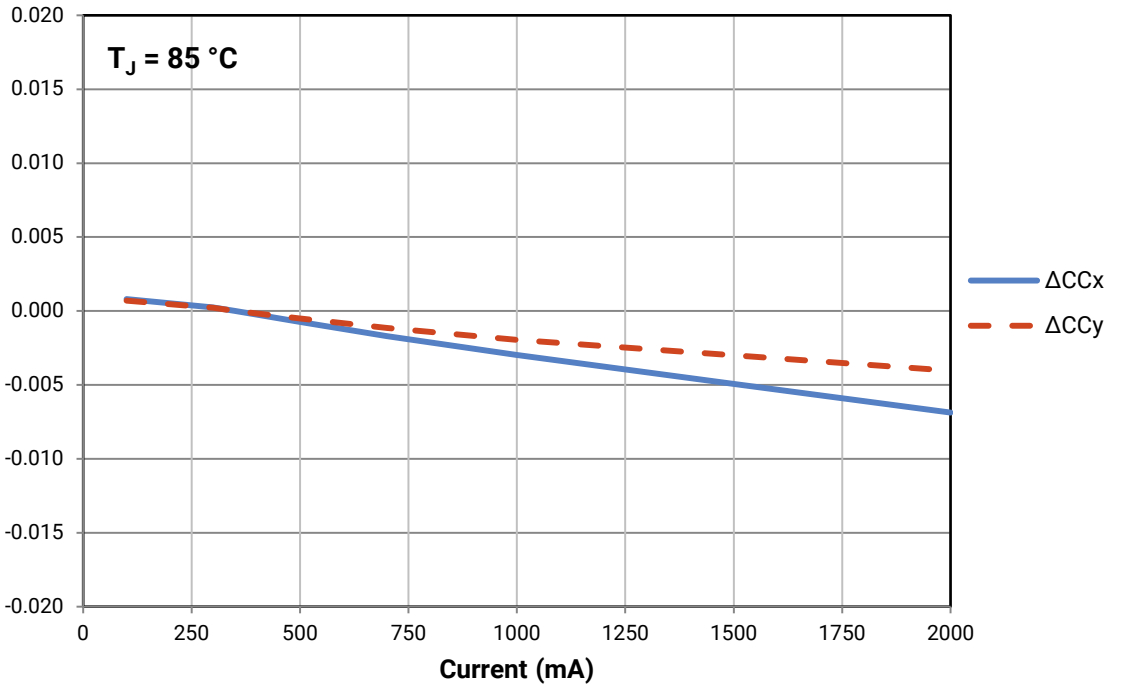

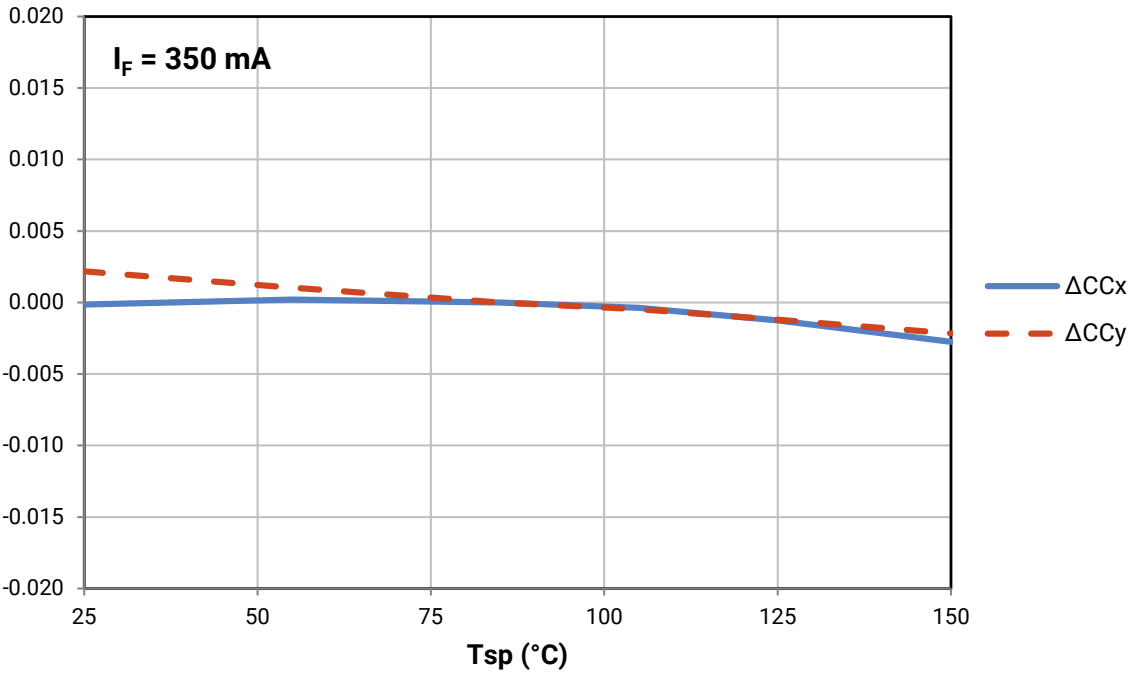

© 2012-2024 Cree LED. The information in this document is subject to change without notice. Cree®, the Cree logo, the Cree LED logo and XLamp® are registered trademarks of Cree LED. UL® and the UL logo are registered trademarks of UL LLC. Other trademarks, product, and company names are the property of their respective owners and do not imply specific product and/or vendor endorsement, sponsorship or association.

RELATIVE CHROMATICITY VS CURRENT AND TEMPERATURE - STANDARD (WARM WHITE*)

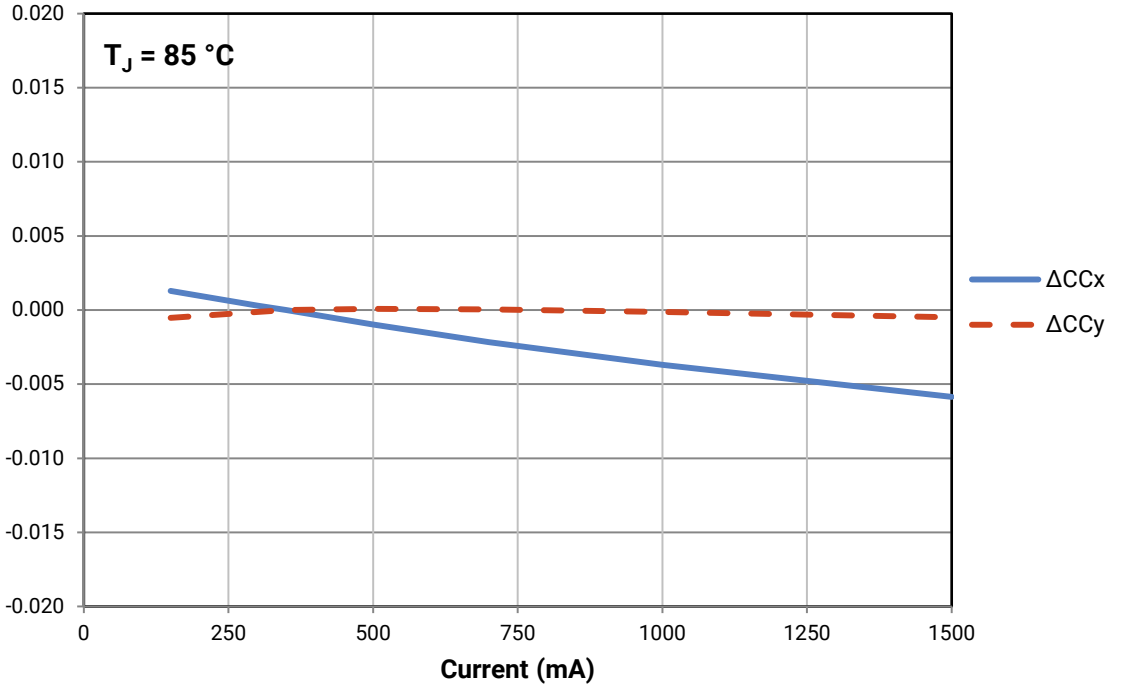

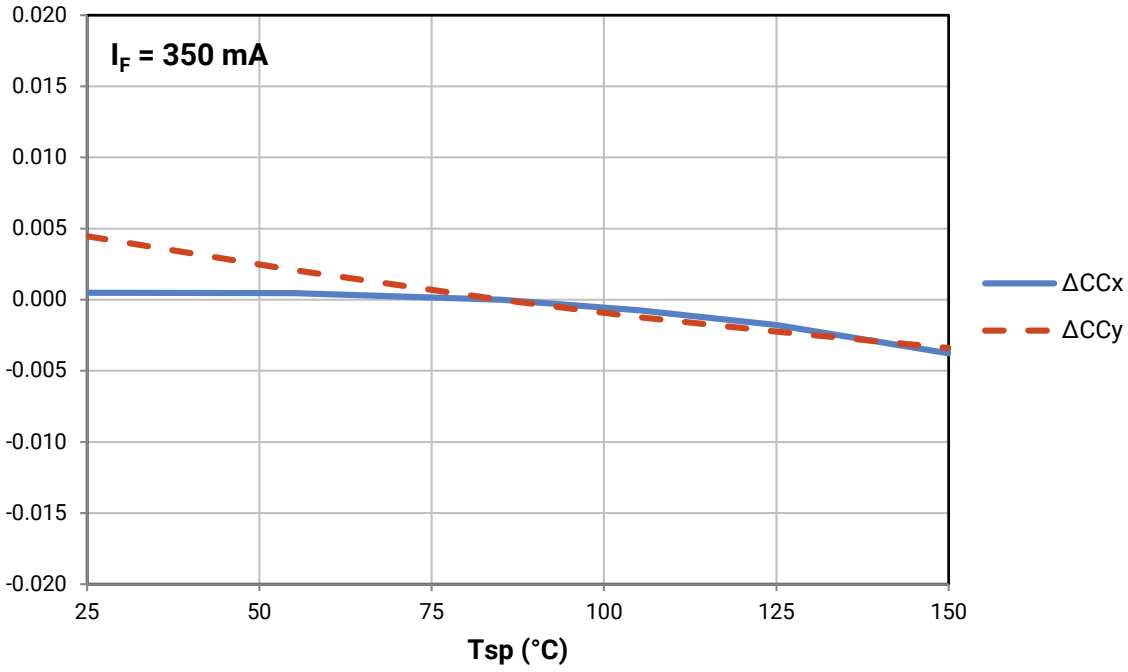

- Warm White XLamp XP-G2 LEDs have a typical CRI of 80.

© 2012-2024 Cree LED. The information in this document is subject to change without notice. Cree®, the Cree logo, the Cree LED logo and XLamp® are registered trademarks of Cree LED. UL® and the UL logo are registered trademarks of UL LLC. Other trademarks, product, and company names are the property of their respective owners and do not imply specific product and/or vendor endorsement, sponsorship or association.

TYPICAL SPATIAL DISTRIBUTION - HIGH EFFICACY

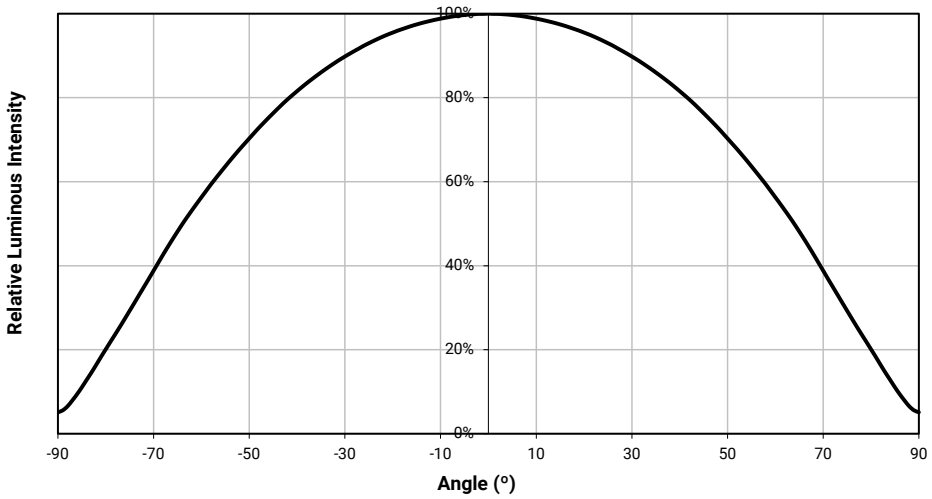

TYPICAL SPATIAL DISTRIBUTION - STANDARD

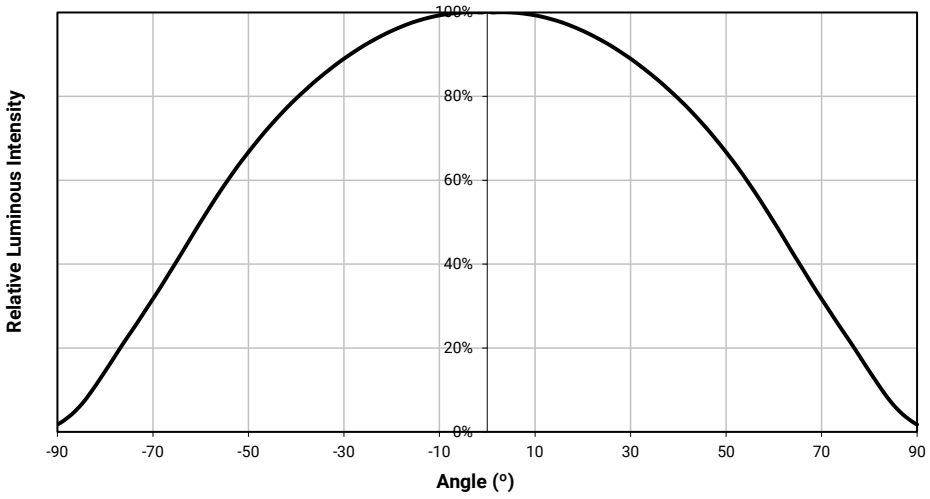

© 2012-2024 Cree LED. The information in this document is subject to change without notice. Cree®, the Cree logo, the Cree LED logo and XLamp® are registered trademarks of Cree LED. UL® and the UL logo are registered trademarks of UL LLC. Other trademarks, product, and company names are the property of their respective owners and do not imply specific product and/or vendor endorsement, sponsorship or association.

THERMAL DESIGN - HIGH EFFICACY

The maximum forward current is determined by the thermal resistance between the LED junction and ambient. It is crucial for the end product to be designed in a manner that minimizes the thermal resistance from the solder point to ambient in order to optimize lamp life and optical characteristics.

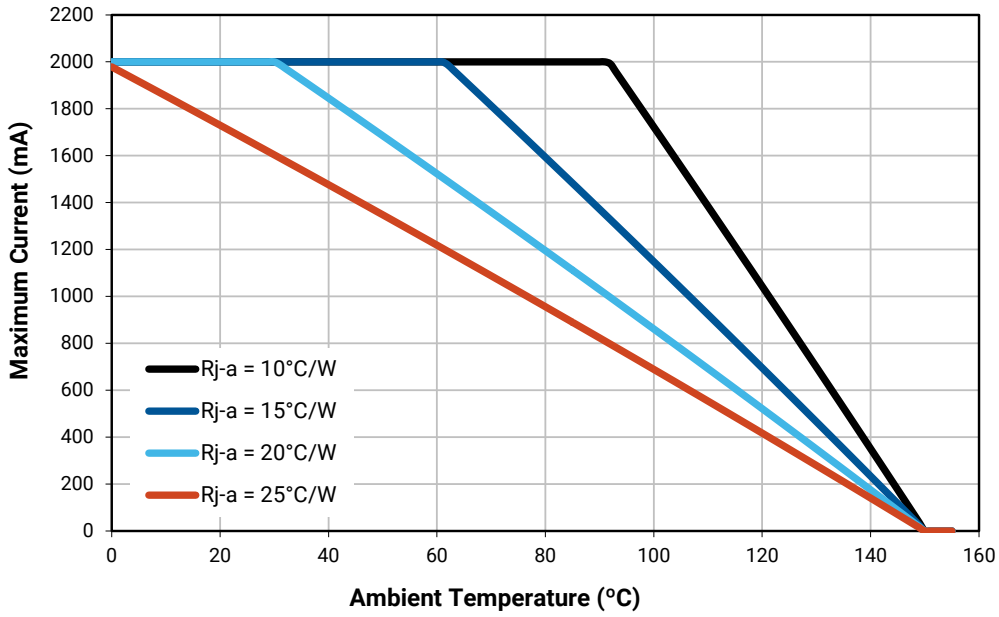

THERMAL DESIGN - STANDARD

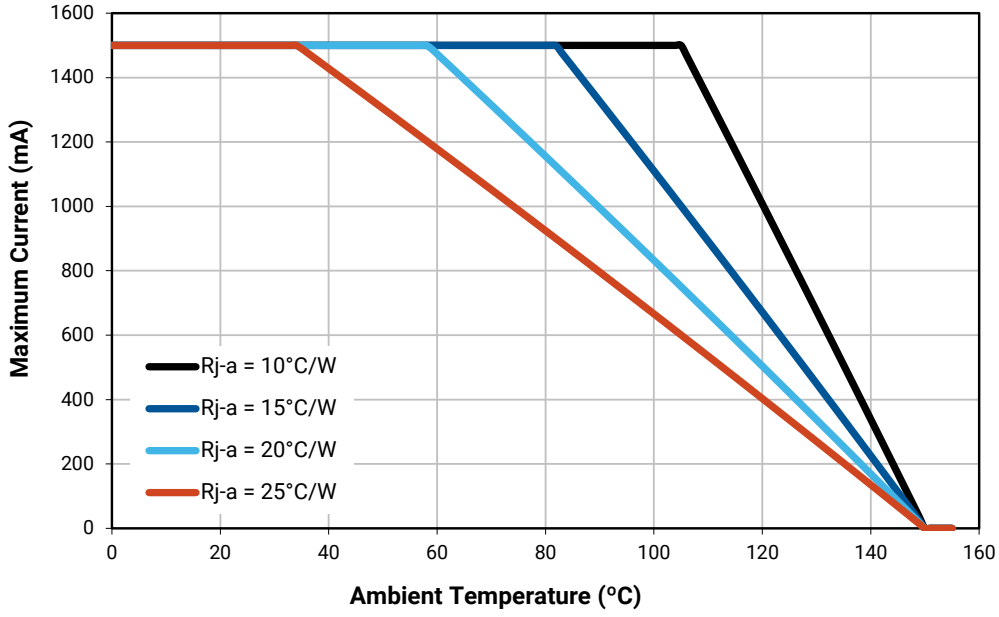

© 2012-2024 Cree LED. The information in this document is subject to change without notice. Cree®, the Cree logo, the Cree LED logo and XLamp® are registered trademarks of Cree LED. UL® and the UL logo are registered trademarks of UL LLC. Other trademarks, product, and company names are the property of their respective owners and do not imply specific product and/or vendor endorsement, sponsorship or association.

PERFORMANCE GROUPS – LUMINOUS FLUX

XLamp XP-G2 LEDs are tested for luminous flux and placed into one of the following luminous-flux groups:

Group Code	Minimum Luminous Flux (lm) @ 350 mA	Maximum Luminous Flux (lm) @ 350 mA
P2	67.2	73.9
P3	73.9	80.6
P4	80.6	87.4
Q2	87.4	93.9
Q3	93.9	100
Q4	100	107
Q5	107	114
R2	114	122
R3	122	130
R4	130	139
R5	139	148
S2	148	156
S3	156	164
S4	164	172
S5	172	180
S6	180	188
S7	188	196

© 2012-2024 Cree LED. The information in this document is subject to change without notice. Cree®, the Cree logo, the Cree LED logo and XLamp® are registered trademarks of Cree LED. UL® and the UL logo are registered trademarks of UL LLC. Other trademarks, product, and company names are the property of their respective owners and do not imply specific product and/or vendor endorsement, sponsorship or association.

PERFORMANCE GROUPS – CHROMATICITY

Region	x	y	Region	x	y	Region	x	y	Region	x	y
0A	0.2950	0.2970	0B	0.2920	0.3060	0C	0.2984	0.3133	0D	0.2984	0.3133
	0.2920	0.3060		0.2895	0.3135		0.2962	0.3220		0.3048	0.3207
	0.2984	0.3133		0.2962	0.3220		0.3028	0.3304		0.3068	0.3113
	0.3009	0.3042		0.2984	0.3133		0.3048	0.3207		0.3009	0.3042
0R	0.2980	0.2880	0S	0.2895	0.3135	0T	0.2962	0.3220	0U	0.3037	0.2937
	0.2950	0.2970		0.2870	0.3210		0.2937	0.3312		0.3009	0.3042
	0.3009	0.3042		0.2937	0.3312		0.3005	0.3415		0.3068	0.3113
	0.3037	0.2937		0.2962	0.3220		0.3028	0.3304		0.3093	0.2993
1A	0.3048	0.3207	1B	0.3028	0.3304	1C	0.3115	0.3391	1D	0.3130	0.3290
	0.3130	0.3290		0.3115	0.3391		0.3205	0.3481		0.3213	0.3373
	0.3144	0.3186		0.3130	0.3290		0.3213	0.3373		0.3221	0.3261
	0.3068	0.3113		0.3048	0.3207		0.3130	0.3290		0.3144	0.3186
1R	0.3068	0.3113	1S	0.3005	0.3415	1T	0.3099	0.3509	1U	0.3144	0.3186
	0.3144	0.3186		0.3099	0.3509		0.3196	0.3602		0.3221	0.3261
	0.3161	0.3059		0.3115	0.3391		0.3205	0.3481		0.3231	0.3120
	0.3093	0.2993		0.3028	0.3304		0.3115	0.3391		0.3161	0.3059
2A	0.3215	0.3350	2B	0.3207	0.3462	2C	0.3290	0.3538	2D	0.3290	0.3417
	0.3290	0.3417		0.3290	0.3538		0.3376	0.3616		0.3371	0.3490
	0.3290	0.3300		0.3290	0.3417		0.3371	0.3490		0.3366	0.3369
	0.3222	0.3243		0.3215	0.3350		0.3290	0.3417		0.3290	0.3300
2R	0.3222	0.3243	2S	0.3196	0.3602	2T	0.3290	0.3690	2U	0.3290	0.3300
	0.3290	0.3300		0.3290	0.3690		0.3381	0.3762		0.3366	0.3369
	0.3290	0.3180		0.3290	0.3538		0.3376	0.3616		0.3361	0.3245
	0.3231	0.3120		0.3207	0.3462		0.3290	0.3538		0.3290	0.3180
3A	0.3371	0.3490	3B	0.3376	0.3616	3C	0.3463	0.3687	3D	0.3451	0.3554
	0.3451	0.3554		0.3463	0.3687		0.3551	0.3760		0.3533	0.3620
	0.3440	0.3427		0.3451	0.3554		0.3533	0.3620		0.3515	0.3487
	0.3366	0.3369		0.3371	0.3490		0.3451	0.3554		0.3440	0.3427
3R	0.3366	0.3369	3S	0.3381	0.3762						
	0.3440	0.3428		0.3480	0.3840						
	0.3429	0.3307		0.3463	0.3687						
	0.3361	0.3245		0.3376	0.3616						
4A	0.3530	0.3597	4B	0.3548	0.3736	4C	0.3641	0.3804	4D	0.3615	0.3659
	0.3615	0.3659		0.3641	0.3804		0.3736	0.3874		0.3702	0.3722
	0.3590	0.3521		0.3615	0.3659		0.3702	0.3722		0.3670	0.3578
	0.3512	0.3465		0.3530	0.3597		0.3615	0.3659		0.3590	0.3521

© 2012-2024 Cree LED. The information in this document is subject to change without notice. Cree®, the Cree logo, the Cree LED logo and XLamp® are registered trademarks of Cree LED. UL® and the UL logo are registered trademarks of UL LLC. Other trademarks, product, and company names are the property of their respective owners and do not imply specific product and/or vendor endorsement, sponsorship or association.

PERFORMANCE GROUPS – CHROMATICITY (CONTINUED)

Region	x	y	Region	x	y	Region	x	y	Region	x	y
5A1	0.3670	0.3578	5A2	0.3686	0.3649	5A3	0.3744	0.3685	5A4	0.3726	0.3612
	0.3686	0.3649		0.3702	0.3722		0.3763	0.3760		0.3744	0.3685
	0.3744	0.3685		0.3763	0.3760		0.3825	0.3798		0.3804	0.3721
	0.3726	0.3612		0.3744	0.3685		0.3804	0.3721		0.3783	0.3646
5B1	0.3702	0.3722	5B2	0.3719	0.3797	5B3	0.3782	0.3837	5B4	0.3763	0.3760
	0.3719	0.3797		0.3736	0.3874		0.3802	0.3916		0.3782	0.3837
	0.3782	0.3837		0.3802	0.3916		0.3869	0.3958		0.3847	0.3877
	0.3763	0.3760		0.3782	0.3837		0.3847	0.3877		0.3825	0.3798
5C1	0.3825	0.3798	5C2	0.3847	0.3877	5C3	0.3912	0.3917	5C4	0.3887	0.3836
	0.3847	0.3877		0.3869	0.3958		0.3937	0.4001		0.3912	0.3917
	0.3912	0.3917		0.3937	0.4001		0.4006	0.4044		0.3978	0.3958
	0.3887	0.3836		0.3912	0.3917		0.3978	0.3958		0.3950	0.3875
5D1	0.3783	0.3646	5D2	0.3804	0.3721	5D3	0.3863	0.3758	5D4	0.3840	0.3681
	0.3804	0.3721		0.3825	0.3798		0.3887	0.3836		0.3863	0.3758
	0.3863	0.3758		0.3887	0.3836		0.3950	0.3875		0.3924	0.3794
	0.3840	0.3681		0.3863	0.3758		0.3924	0.3794		0.3898	0.3716
6A1	0.3889	0.3690	6A2	0.3915	0.3768	6A3	0.3981	0.3800	6A4	0.3953	0.3720
	0.3915	0.3768		0.3941	0.3848		0.4010	0.3882		0.3981	0.3800
	0.3981	0.3800		0.4010	0.3882		0.4080	0.3916		0.4048	0.3832
	0.3953	0.3720		0.3981	0.3800		0.4048	0.3832		0.4017	0.3751
6B1	0.3941	0.3848	6B2	0.3968	0.3930	6B3	0.4040	0.3966	6B4	0.4010	0.3882
	0.3968	0.3930		0.3996	0.4015		0.4071	0.4052		0.4040	0.3966
	0.4040	0.3966		0.4071	0.4052		0.4146	0.4089		0.4113	0.4001
	0.4010	0.3882		0.4040	0.3966		0.4113	0.4001		0.4080	0.3916
6C1	0.4080	0.3916	6C2	0.4113	0.4001	6C3	0.4186	0.4037	6C4	0.4150	0.3950
	0.4113	0.4001		0.4146	0.4089		0.4222	0.4127		0.4186	0.4037
	0.4186	0.4037		0.4222	0.4127		0.4299	0.4165		0.4259	0.4073
	0.4150	0.3950		0.4186	0.4037		0.4259	0.4073		0.4221	0.3984
6D1	0.4017	0.3751	6D2	0.4048	0.3832	6D3	0.4116	0.3865	6D4	0.4082	0.3782
	0.4048	0.3832		0.4080	0.3916		0.4150	0.3950		0.4116	0.3865
	0.4116	0.3865		0.4150	0.3950		0.4221	0.3984		0.4183	0.3898
	0.4082	0.3782		0.4116	0.3865		0.4183	0.3898		0.4147	0.3814
7A1	0.4147	0.3814	7A2	0.4183	0.3898	7A3	0.4242	0.3919	7A4	0.4203	0.3833
	0.4183	0.3898		0.4221	0.3984		0.4281	0.4006		0.4242	0.3919
	0.4242	0.3919		0.4281	0.4006		0.4342	0.4028		0.4300	0.3939
	0.4203	0.3833		0.4242	0.3919		0.4300	0.3939		0.4259	0.3853

© 2012-2024 Cree LED. The information in this document is subject to change without notice. Cree®, the Cree logo, the Cree LED logo and XLamp® are registered trademarks of Cree LED. UL® and the UL logo are registered trademarks of UL LLC. Other trademarks, product, and company names are the property of their respective owners and do not imply specific product and/or vendor endorsement, sponsorship or association.

PERFORMANCE GROUPS – CHROMATICITY (CONTINUED)

Region	x	y	Region	x	y	Region	x	y	Region	x	y
7B1	0.4221	0.3984	7B2	0.4259	0.4073	7B3	0.4322	0.4096	7B4	0.4281	0.4006
	0.4259	0.4073		0.4299	0.4165		0.4364	0.4188		0.4322	0.4096
	0.4322	0.4096		0.4364	0.4188		0.4430	0.4212		0.4385	0.4119
	0.4281	0.4006		0.4322	0.4096		0.4385	0.4119		0.4342	0.4028
7C1	0.4342	0.4028	7C2	0.4385	0.4119	7C3	0.4449	0.4141	7C4	0.4403	0.4049
	0.4385	0.4119		0.4430	0.4212		0.4496	0.4236		0.4449	0.4141
	0.4449	0.4141		0.4496	0.4236		0.4562	0.4260		0.4513	0.4164
	0.4403	0.4049		0.4449	0.4141		0.4513	0.4164		0.4465	0.4071
7D1	0.4259	0.3853	7D2	0.4300	0.3939	7D3	0.4359	0.3960	7D4	0.4316	0.3873
	0.4300	0.3939		0.4342	0.4028		0.4403	0.4049		0.4359	0.3960
	0.4359	0.3960		0.4403	0.4049		0.4465	0.4071		0.4418	0.3981
	0.4316	0.3873		0.4359	0.3960		0.4418	0.3981		0.4373	0.3893
8A1	0.4373	0.3893	8A2	0.4418	0.3981	8A3	0.4475	0.3994	8A4	0.4428	0.3906
	0.4418	0.3981		0.4465	0.4071		0.4523	0.4085		0.4475	0.3994
	0.4475	0.3994		0.4523	0.4085		0.4582	0.4099		0.4532	0.4008
	0.4428	0.3906		0.4475	0.3994		0.4532	0.4008		0.4483	0.3919
8B1	0.4465	0.4071	8B2	0.4513	0.4164	8B3	0.4573	0.4178	8B4	0.4523	0.4085
	0.4513	0.4164		0.4562	0.4260		0.4624	0.4274		0.4573	0.4178
	0.4573	0.4178		0.4624	0.4274		0.4687	0.4289		0.4634	0.4193
	0.4523	0.4085		0.4573	0.4178		0.4634	0.4193		0.4582	0.4099
8C1	0.4582	0.4099	8C2	0.4634	0.4193	8C3	0.4695	0.4207	8C4	0.4641	0.4112
	0.4634	0.4193		0.4687	0.4289		0.4750	0.4304		0.4695	0.4207
	0.4695	0.4207		0.4750	0.4304		0.4813	0.4319		0.4756	0.4221
	0.4641	0.4112		0.4695	0.4207		0.4756	0.4221		0.4700	0.4126
8D1	0.4483	0.3919	8D2	0.4532	0.4008	8D3	0.4589	0.4021	8D4	0.4538	0.3931
	0.4532	0.4008		0.4582	0.4099		0.4641	0.4112		0.4589	0.4021
	0.4589	0.4021		0.4641	0.4112		0.4700	0.4126		0.4646	0.4034
	0.4538	0.3931		0.4589	0.4021		0.4646	0.4034		0.4593	0.3944

© 2012-2024 Cree LED. The information in this document is subject to change without notice. Cree®, the Cree logo, the Cree LED logo and XLamp® are registered trademarks of Cree LED. UL® and the UL logo are registered trademarks of UL LLC. Other trademarks, product, and company names are the property of their respective owners and do not imply specific product and/or vendor endorsement, sponsorship or association.

STANDARD COOL WHITE KITS PLOTTED ON ANSI STANDARD CHROMATICITY REGIONS

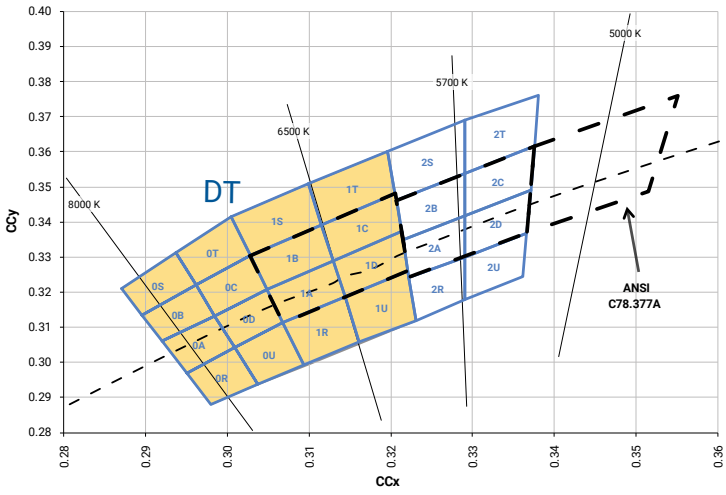

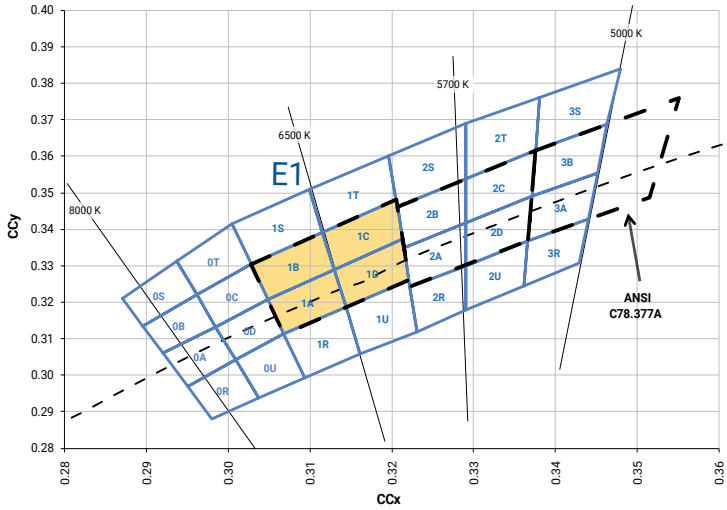

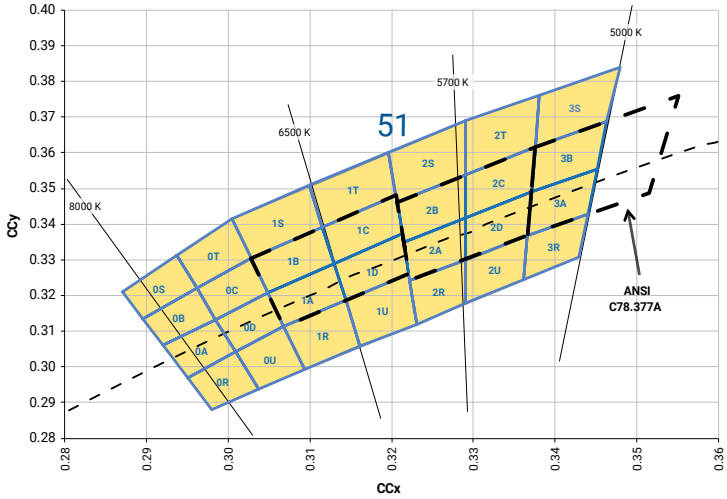

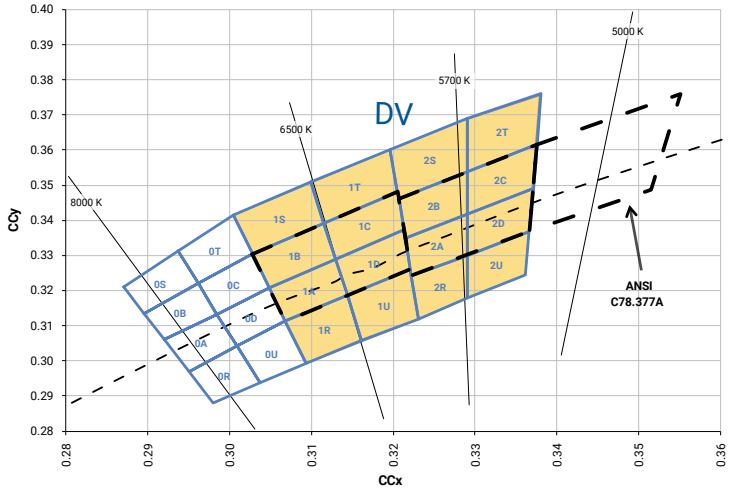

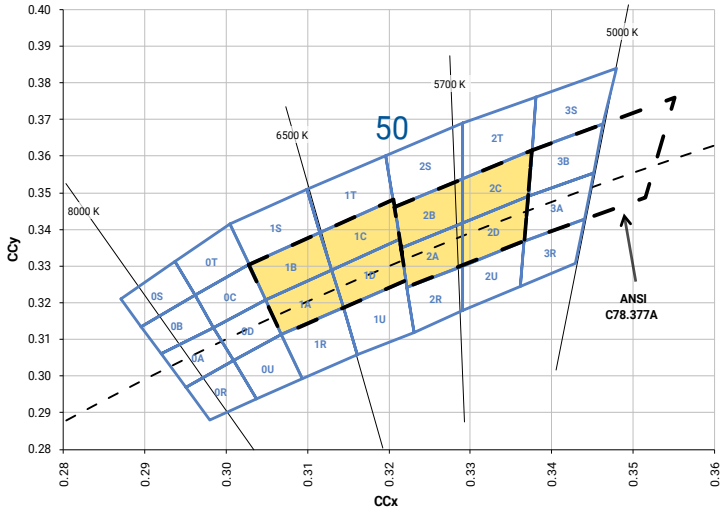

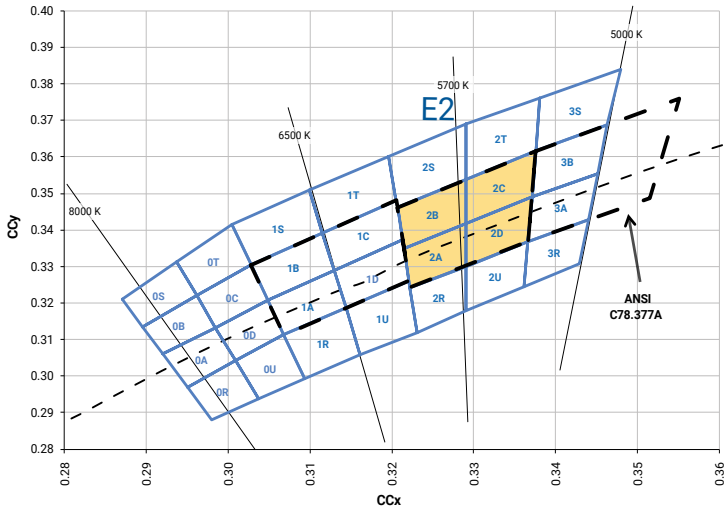

© 2012-2024 Cree LED. The information in this document is subject to change without notice. Cree®, the Cree logo, the Cree LED logo and XLamp® are registered trademarks of Cree LED. UL® and the UL logo are registered trademarks of UL LLC. Other trademarks, product, and company names are the property of their respective owners and do not imply specific product and/or vendor endorsement, sponsorship or association.

STANDARD COOL WHITE KITS PLOTTED ON ANSI STANDARD CHROMATICITY REGIONS - CONTINUED

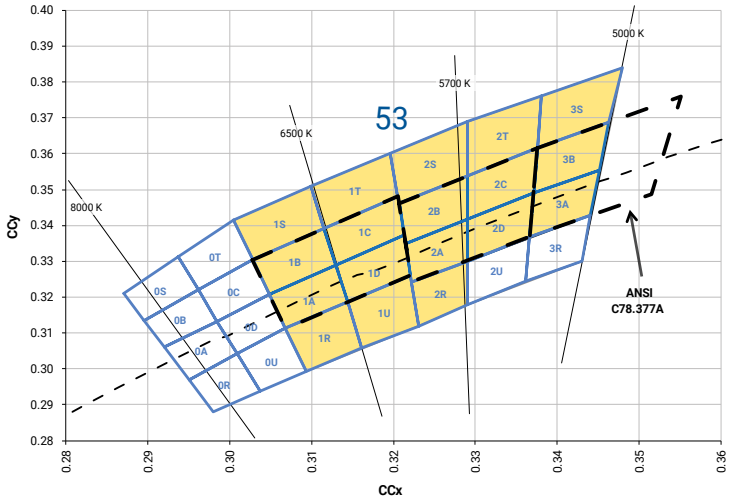

© 2012-2024 Cree LED. The information in this document is subject to change without notice. Cree®, the Cree logo, the Cree LED logo and XLamp® are registered trademarks of Cree LED. UL® and the UL logo are registered trademarks of UL LLC. Other trademarks, product, and company names are the property of their respective owners and do not imply specific product and/or vendor endorsement, sponsorship or association.

STANDARD WARM AND NEUTRAL WHITE KITS PLOTTED ON ANSI STANDARD CHROMATICITY REGIONS

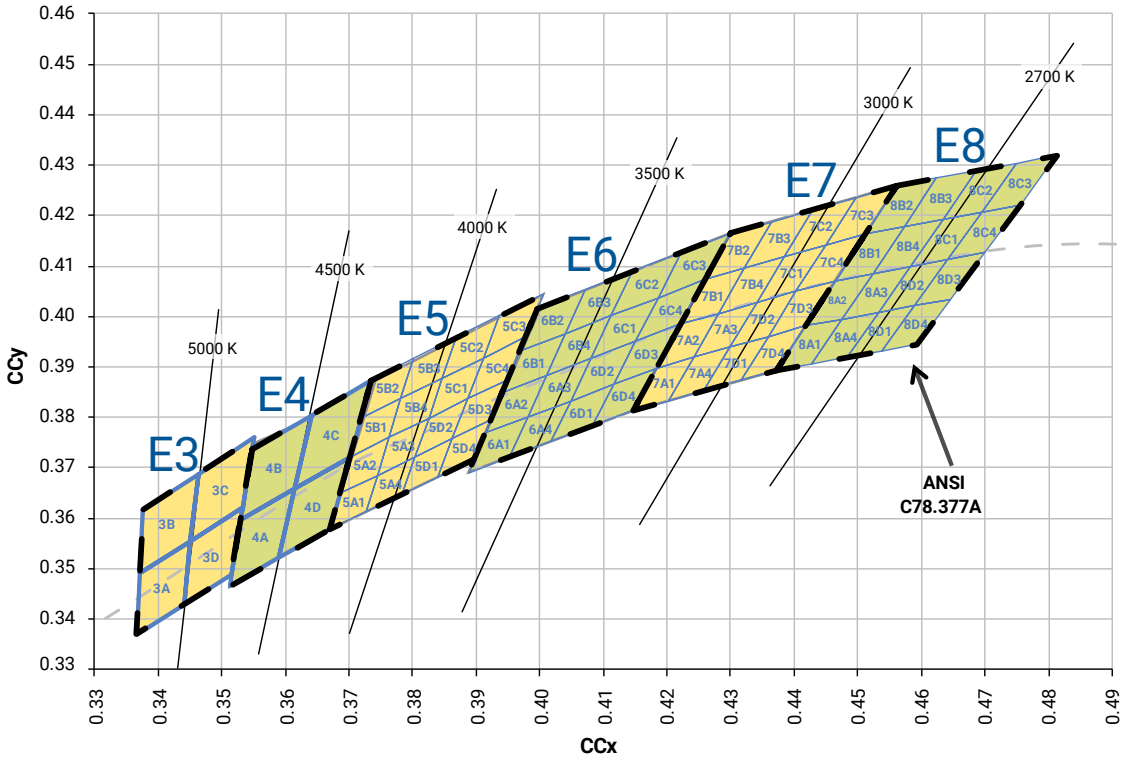

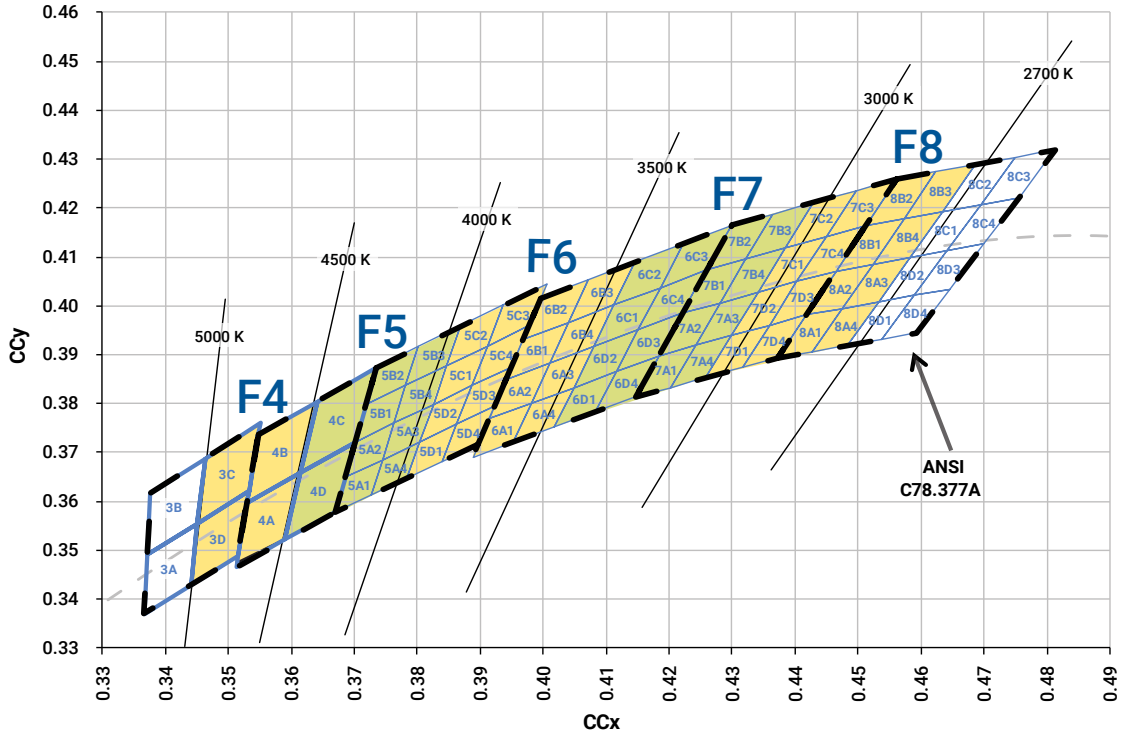

© 2012-2024 Cree LED. The information in this document is subject to change without notice. Cree®, the Cree logo, the Cree LED logo and XLamp® are registered trademarks of Cree LED. UL® and the UL logo are registered trademarks of UL LLC. Other trademarks, product, and company names are the property of their respective owners and do not imply specific product and/or vendor endorsement, sponsorship or association.

STANDARD WARM AND NEUTRAL WHITE KITS PLOTTED ON ANSI STANDARD CHROMATICITY REGIONS - CONTINUED

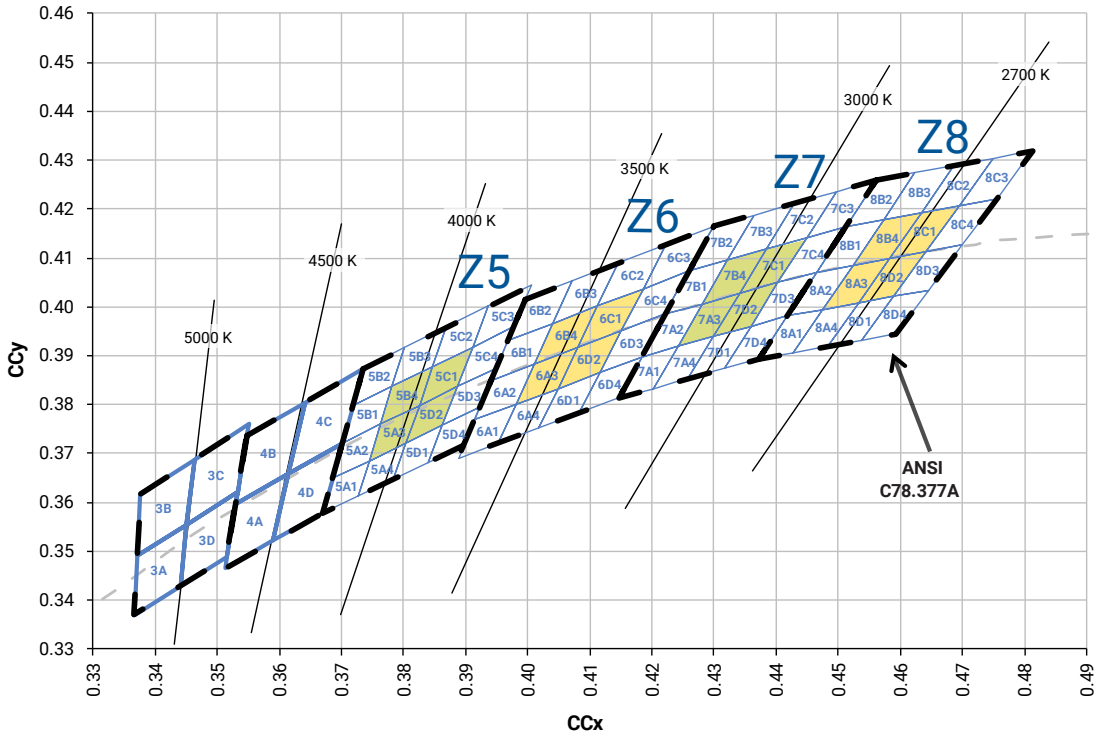

© 2012-2024 Cree LED. The information in this document is subject to change without notice. Cree®, the Cree logo, the Cree LED logo and XLamp® are registered trademarks of Cree LED. UL® and the UL logo are registered trademarks of UL LLC. Other trademarks, product, and company names are the property of their respective owners and do not imply specific product and/or vendor endorsement, sponsorship or association.

STANDARD CHROMATICITY KITS

The following table provides the chromaticity bins associated with chromaticity kits.

Color	CCT	Kit	Chromaticity Bins
Cool White	7000 K	DT	0A, 0B, 0C, 0D, 0R, 0S, 0T, 0U, 1A, 1B, 1C, 1D, 1R, 1S, 1T, 1U
	6200 K	51	0A, 0B, 0C, 0D, 0R, 0S, 0T, 0U, 1A, 1B, 1C, 1D, 1R, 1S, 1T, 1U, 2A, 2B, 2C, 2D, 2R, 2S, 2T, 2U, 3A, 3B, 3R, 3S
	6000 K	53	1A, 1B, 1C, 1D, 1R, 1S, 1T, 1U, 2A, 2B, 2C, 2D, 2R, 2S, 2T, 3A, 3B, 3S
	6000 K	50	1A, 1B, 1C, 1D, 2A, 2B, 2C, 2D
	6500 K	E1	1A, 1B, 1C, 1D
	6000 K	DV	1A, 1B, 1C, 1D, 1R, 1S, 1T, 1U, 2A, 2B, 2C, 2D, 2R, 2S, 2T, 2U
	5700 K	E2	2A, 2B, 2C, 2D
Neutral White	5000 K	E3	3A, 3B, 3C, 3D
	4750 K	F4	3C, 3D, 4A, 4B
	4500 K	E4	4A, 4B, 4C, 4D
	4250 K	F5	4C, 4D, 5A1, 5A2, 5A3, 5A4, 5B1, 5B2, 5B3, 5B4
	4000 K	E5	5A1, 5A2, 5A3, 5A4, 5B1, 5B2, 5B3, 5B4, 5C1, 5C2, 5C3, 5C4, 5D1, 5D2, 5D3, 5D4
	4000 K	Z5	5A3, 5B4, 5C1, 5D2
Warm White	3750 K	F6	5C1, 5C2, 5C3, 5C4, 5D1, 5D2, 5D3, 5D4, 6A1, 6A2, 6A3, 6A4, 6B1, 6B2, 6B3, 6B4
	3500 K	E6	6A1, 6A2, 6A3, 6A4, 6B1, 6B2, 6B3, 6B4, 6C1, 6C2, 6C3, 6C4, 6D1, 6D2, 6D3, 6D4
	3500 K	Z6	6A3, 6B4, 6C1, 6D2
	3250 K	F7	6C1, 6C2, 6C3, 6C4, 6D1, 6D2, 6D3, 6D4, 7A1, 7A2, 7A3, 7A4, 7B1, 7B2, 7B3, 7B4
	3000 K	E7	7A1, 7A2, 7A3, 7A4, 7B1, 7B2, 7B3, 7B4, 7C1, 7C2, 7C3, 7C4, 7D1, 7D2, 7D3, 7D4
	3000 K	Z7	7A3, 7B4, 7C1, 7D2
	2850 K	F8	7C1, 7C2, 7C3, 7C4, 7D1, 7D2, 7D3, 7D4, 8A1, 8A2, 8A3, 8A4, 8B1, 8B2, 8B3, 8B4
	2700 K	E8	8A1, 8A2, 8A3, 8A4, 8B1, 8B2, 8B3, 8B4, 8C1, 8C2, 8C3, 8C4, 8D1, 8D2, 8D3, 8D4
	2700 K	Z8	8A3, 8B4, 8C1, 8D2

© 2012-2024 Cree LED. The information in this document is subject to change without notice. Cree®, the Cree logo, the Cree LED logo and XLamp® are registered trademarks of Cree LED. UL® and the UL logo are registered trademarks of UL LLC. Other trademarks, product, and company names are the property of their respective owners and do not imply specific product and/or vendor endorsement, sponsorship or association.

BIN AND ORDER CODE FORMATS

XP-G2 bin codes and order codes are configured in the following manner:

Order Code

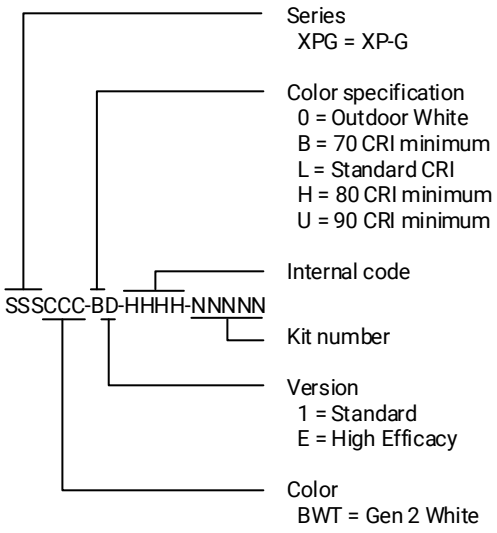

Bin Code

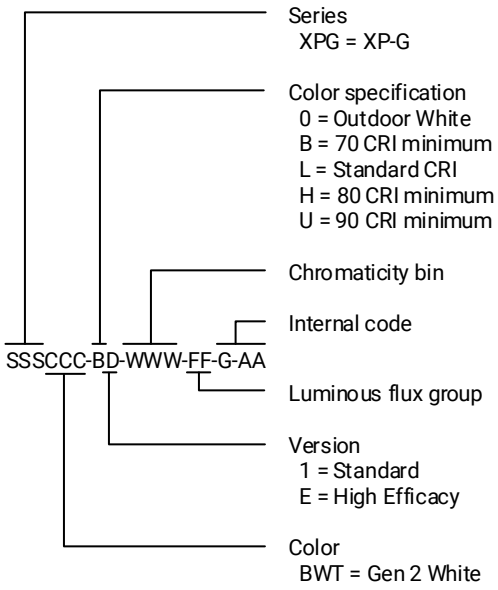

© 2012-2024 Cree LED. The information in this document is subject to change without notice. Cree®, the Cree logo, the Cree LED logo and XLamp® are registered trademarks of Cree LED. UL® and the UL logo are registered trademarks of UL LLC. Other trademarks, product, and company names are the property of their respective owners and do not imply specific product and/or vendor endorsement, sponsorship or association.

REFLOW SOLDERING CHARACTERISTICS

In testing, Cree LED has found XLamp XP-G2 LEDs to be compatible with JEDEC J-STD-020C, using the parameters listed below. As a general guideline, Cree LED recommends that users follow the recommended soldering profile provided by the manufacturer of the solder paste used, and therefore it is the lamp or luminaire manufacturer's responsibility to determine applicable soldering requirements.

Note that this general guideline may not apply to all PCB designs and configurations of reflow soldering equipment.

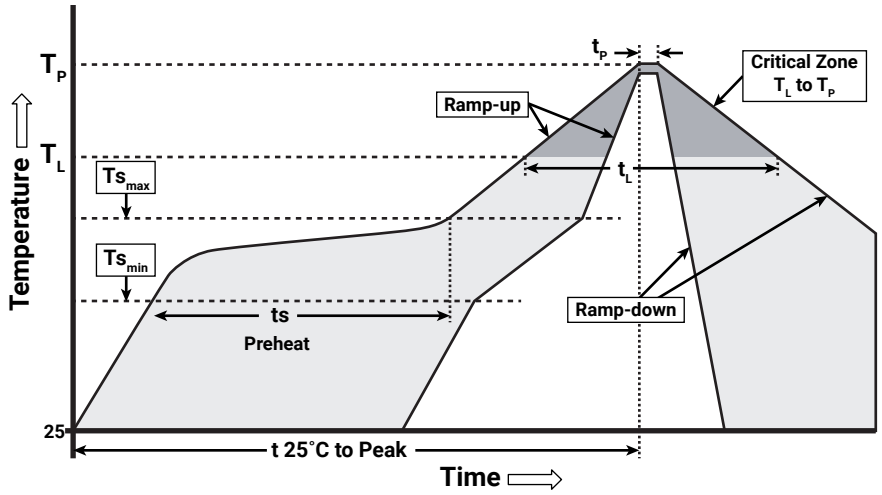

IPC/JEDEC J-STD-020C

Profile Feature	Lead-Free Solder
Average Ramp-Up Rate (Ts_{max} to T_p)	1.2 °C/second
Preheat: Temperature Min (Ts_{min})	120 °C
Preheat: Temperature Max (Ts_{max})	170 °C
Preheat: Time (ts_{min} to ts_{max})	65-150 seconds
Time Maintained Above: Temperature (T_L)	217 °C
Time Maintained Above: Time (t_L)	45-90 seconds
Peak/Classification Temperature (Tp)	235 - 245 °C
Time Within 5 °C of Actual Peak Temperature (tp)	20-40 seconds
Ramp-Down Rate	1 - 6 °C/second
Time 25 °C to Peak Temperature	4 minutes max.

Note: All temperatures refer to topside of the package, measured on the package body surface.

© 2012-2024 Cree LED. The information in this document is subject to change without notice. Cree®, the Cree logo, the Cree LED logo and XLamp® are registered trademarks of Cree LED. UL® and the UL logo are registered trademarks of UL LLC. Other trademarks, product, and company names are the property of their respective owners and do not imply specific product and/or vendor endorsement, sponsorship or association.

NOTES

Measurements

The luminous flux, radiant power, chromaticity, forward voltage and CRI measurements in this document are binning specifications only and solely represent product measurements as of the date of shipment. These measurements will change over time based on a number of factors that are not within Cree LED's control and are not intended or provided as operational specifications for the products. Calculated values are provided for informational purposes only and are not intended or provided as specifications.

Pre-Release Qualification Testing

Please read the LED Reliability Overview for details of the qualification process Cree LED applies to ensure long-term reliability for XLamp LEDs and details of Cree LED's pre-release qualification testing for XLamp LEDs.

Lumen Maintenance

Cree LED now uses standardized IES LM-80-08 and TM-21-11 methods for collecting long-term data and extrapolating LED lumen maintenance. For information on the specific LM-80 data sets available for this LED, refer to the public LM-80 results document.

Please read the Long-Term Lumen Maintenance application note for more details on Cree LED's lumen maintenance testing and forecasting. Please read the Thermal Management application note for details on how thermal design, ambient temperature, and drive current affect the LED junction temperature.

Moisture Sensitivity

Cree LED recommends keeping XLamp LEDs in the provided, resealable moisture-barrier packaging (MBP) until immediately prior to soldering. Unopened MBPs that contain XLamp LEDs do not need special storage for moisture sensitivity.

Once the MBP is opened, XLamp XP-G2 LEDs may be stored as MSL 1 per JEDEC J-STD-033, meaning they have unlimited floor life in conditions of ≤ 30 °C/85% relative humidity (RH). Regardless of the storage condition, Cree LED recommends sealing any unsoldered LEDs in the original MBP.

RoHS Compliance

The levels of RoHS restricted materials in this product are below the maximum concentration values (also referred to as the threshold limits) permitted for such substances, or are used in an exempted application, in accordance with EU Directive 2011/65/EC (RoHS2), as implemented January 2, 2013. RoHS Declarations for this product can be obtained from your Cree LED representative or from the Product Ecology section of the Cree LED website.

REACH Compliance

REACH substances of very high concern (SVHCs) information is available for this product. Since the European Chemical Agency (ECHA) has published notice of their intent to frequently revise the SVHC listing for the foreseeable future, please contact a Cree LED representative to insure you get the most up-to-date REACH Declaration. REACH banned substance information (REACH Article 67) is also available upon request.

© 2012-2024 Cree LED. The information in this document is subject to change without notice. Cree®, the Cree logo, the Cree LED logo and XLamp® are registered trademarks of Cree LED. UL® and the UL logo are registered trademarks of UL LLC. Other trademarks, product, and company names are the property of their respective owners and do not imply specific product and/or vendor endorsement, sponsorship or association.

NOTES - CONTINUED

UL® Recognized Component

This product meets the requirements to be considered a UL Recognized Component with Level 4 enclosure consideration. The LED package or a portion thereof has been investigated as a fire and electrical enclosure per ANSI/UL 8750.

Vision Advisory

WARNING: Do not look at an exposed lamp in operation. Eye injury can result. For more information about LEDs and eye safety, please refer to the LED Eye Safety application note.

© 2012-2024 Cree LED. The information in this document is subject to change without notice. Cree®, the Cree logo, the Cree LED logo and XLamp® are registered trademarks of Cree LED. UL® and the UL logo are registered trademarks of UL LLC. Other trademarks, product, and company names are the property of their respective owners and do not imply specific product and/or vendor endorsement, sponsorship or association.

MECHANICAL DIMENSIONS (T_A = 25 °C)

Thermal vias, if present, are not shown on these drawings.

All measurements are ±.13 mm unless otherwise indicated.

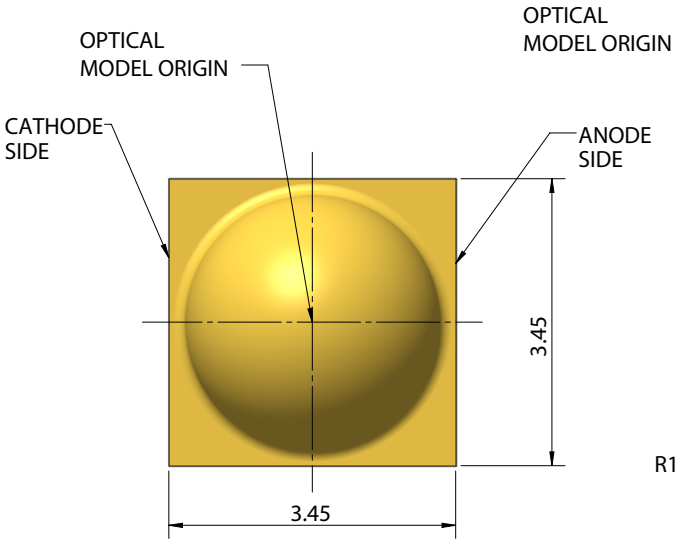

Top View

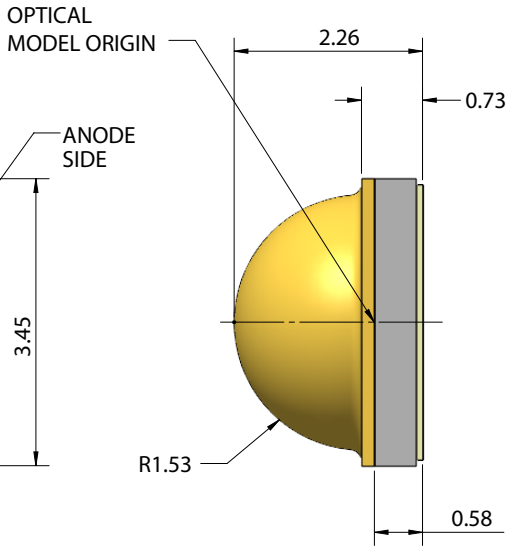

Side View

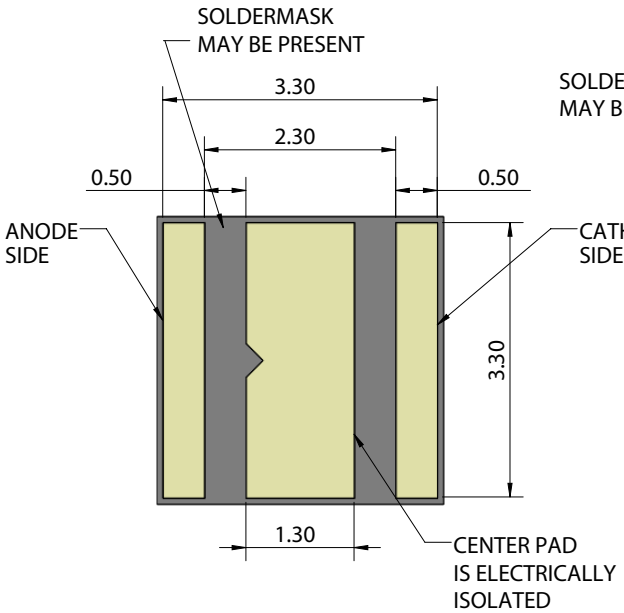

Bottom View

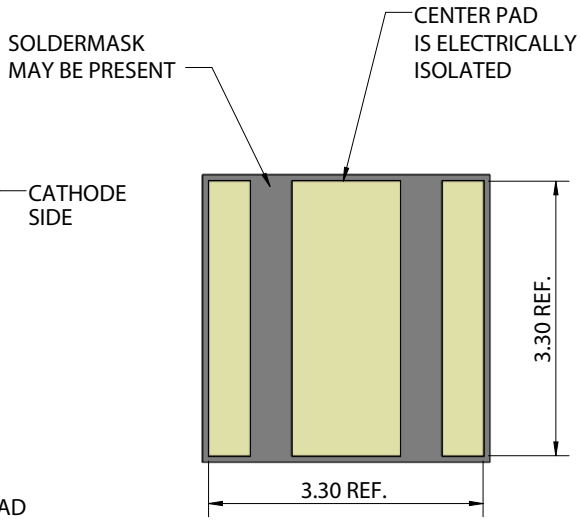

Alternate Bottom View

© 2012-2024 Cree LED. The information in this document is subject to change without notice. Cree®, the Cree logo, the Cree LED logo and XLamp® are registered trademarks of Cree LED. UL® and the UL logo are registered trademarks of UL LLC. Other trademarks, product, and company names are the property of their respective owners and do not imply specific product and/or vendor endorsement, sponsorship or association.

MECHANICAL DIMENSIONS (T_A = 25 °C) - CONTINUED

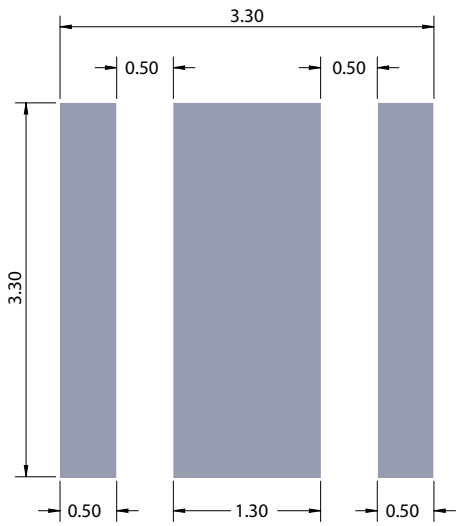

Recommended PCB Footprint

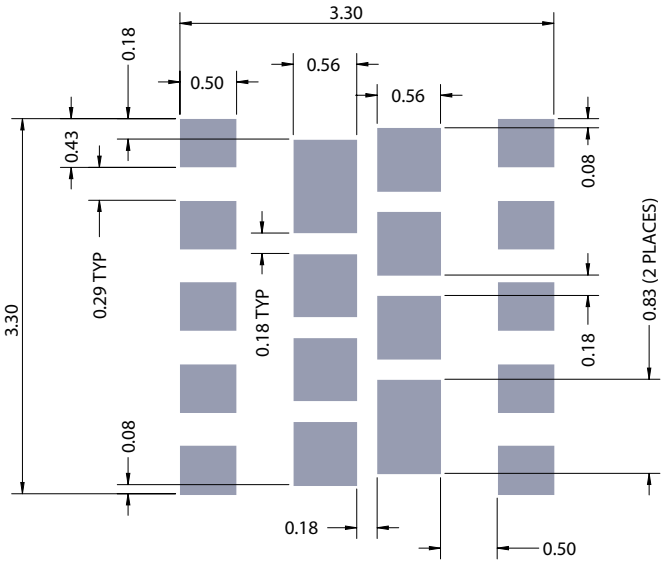

Recommended Stencil Openings*

Notes:

- Cree LED recommends using thermal pad kickouts to maximize component thermal performance.
- Cree LED recommends using white solder mask material to minimize system optical loss.

* This stencil has been tested and optimized for the avoidance of voiding when using ALPHA® LUMET® P30 Maxrel solder paste. For other solder pastes, a "window pane" design for the thermal pad stencil may result in a lower voiding percentage. Contact your local Cree LED Field Applications Engineer for consultation regarding your specific application.

© 2012-2024 Cree LED. The information in this document is subject to change without notice. Cree®, the Cree logo, the Cree LED logo and XLamp® are registered trademarks of Cree LED. UL® and the UL logo are registered trademarks of UL LLC. Other trademarks, product, and company names are the property of their respective owners and do not imply specific product and/or vendor endorsement, sponsorship or association.

TAPE AND REEL

All Cree LED carrier tapes conform to EIA-481D, Automated Component Handling Systems Standard.

All dimensions in mm.

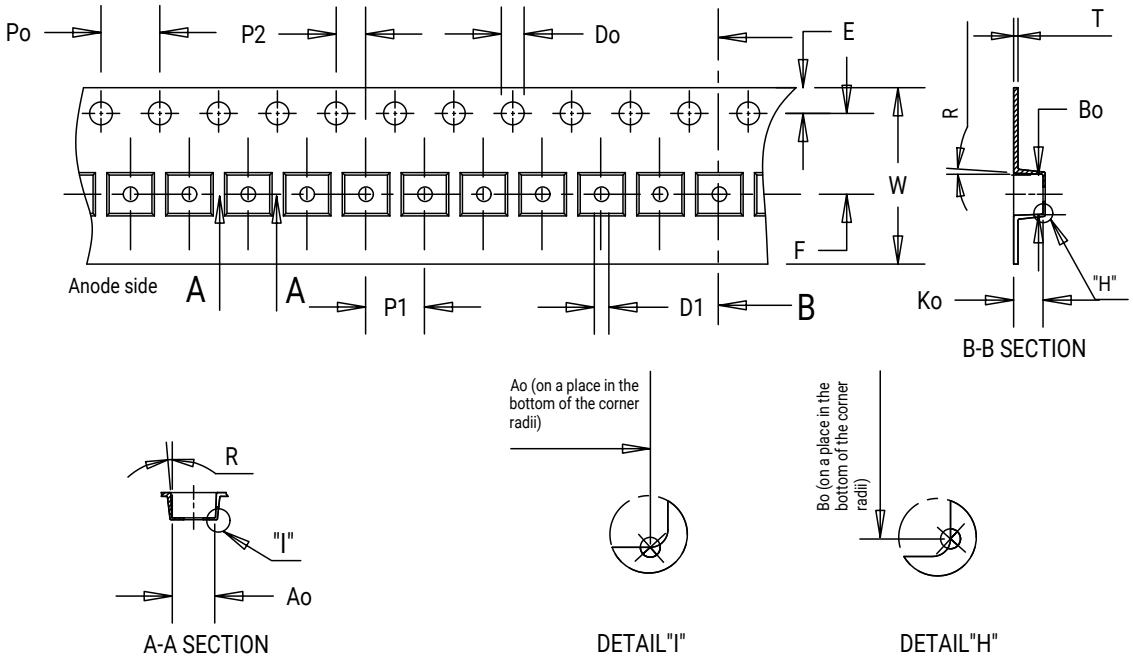

Item	Ao	Bo	Ko	Po	P1	P2	T	E	F	Do	D1	W	R
Dim.	3.70	3.70	2.40	4.00	8.00	2.00	0.30	1.75	5.50	1.55	1.50	12.00	5°

© 2012-2024 Cree LED. The information in this document is subject to change without notice. Cree®, the Cree logo, the Cree LED logo and XLamp® are registered trademarks of Cree LED. UL® and the UL logo are registered trademarks of UL LLC. Other trademarks, product, and company names are the property of their respective owners and do not imply specific product and/or vendor endorsement, sponsorship or association.

TAPE AND REEL - CONTINUED

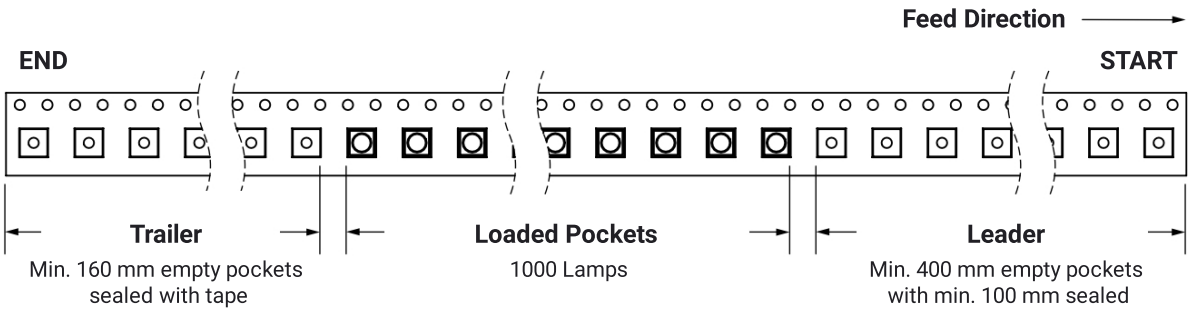

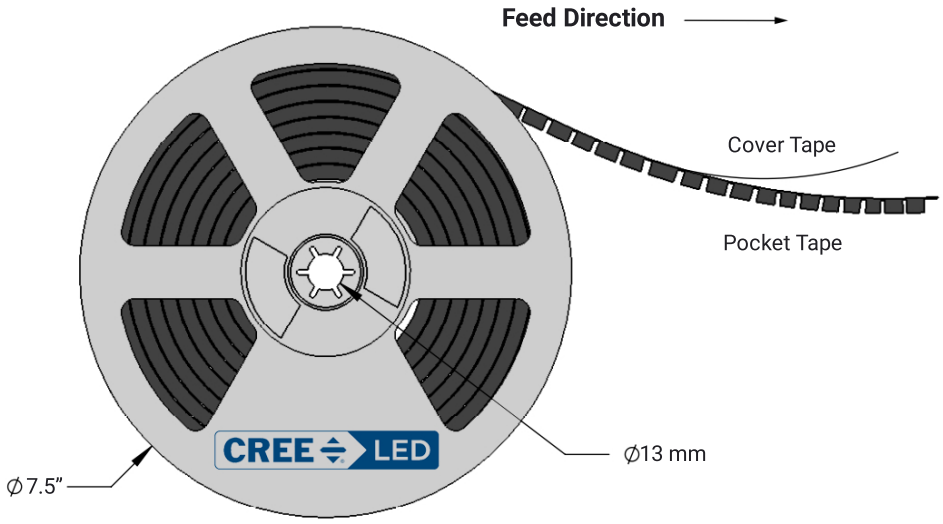

© 2012-2024 Cree LED. The information in this document is subject to change without notice. Cree®, the Cree logo, the Cree LED logo and XLamp® are registered trademarks of Cree LED. UL® and the UL logo are registered trademarks of UL LLC. Other trademarks, product, and company names are the property of their respective owners and do not imply specific product and/or vendor endorsement, sponsorship or association.

PACKAGING

Unpackaged Reel

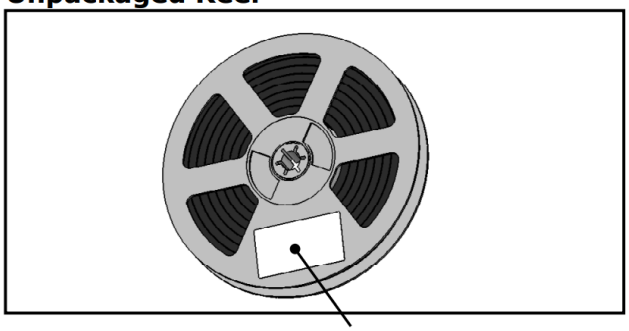

Packaged Reel

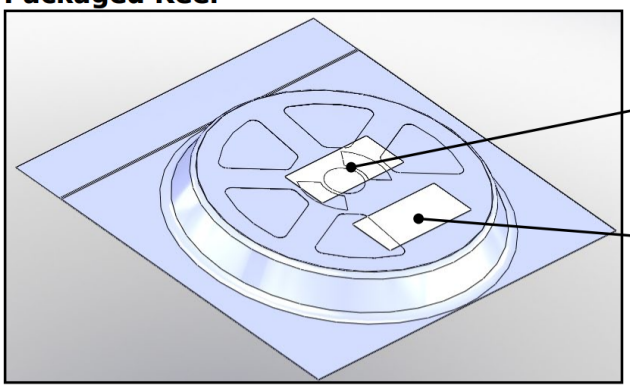

Boxed Reel

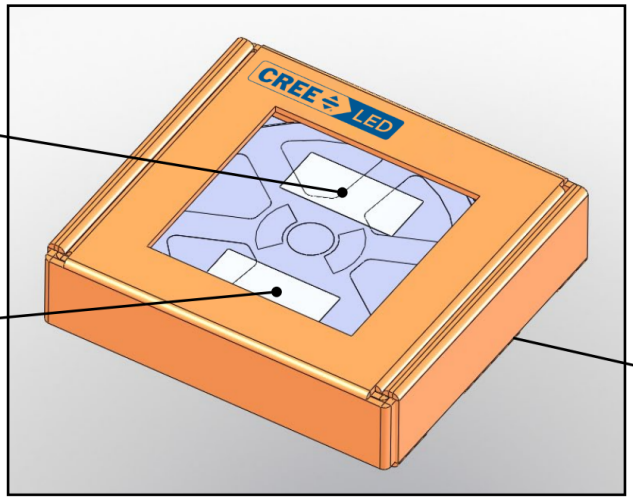

© 2012-2024 Cree LED. The information in this document is subject to change without notice. Cree®, the Cree logo, the Cree LED logo and XLamp® are registered trademarks of Cree LED. UL® and the UL logo are registered trademarks of UL LLC. Other trademarks, product, and company names are the property of their respective owners and do not imply specific product and/or vendor endorsement, sponsorship or association.

APPENDIX - ORDER CODES NOT FOR NEW DESIGNS

The following order codes are active and valid order codes, but higher performance options are also available. Please see page 4 - page 9 for order codes of XLamp XP-G2 LEDs that could serve as alternatives for the order codes set forth below.

XP-G2 High Efficacy, T_J = 85 °C

Chromaticity		Minimum Luminous Flux (lm) @ 350 mA		Order Codes		
Kit	CCT	Code	Flux (lm)	70 CRI Minimum	80 CRI Minimum	90 CRI Minimum
DT	7000 K	S2	148	XPGBWT-BE-0000-00JDT		
		R5	139		XPGBWT-HE-0000-00HDT	
E1	6500 K	S2	148	XPGBWT-BE-0000-00JE1		
		R5	139		XPGBWT-HE-0000-00HE1	
51	6200 K	S2	148	XPGBWT-BE-0000-00J51		
		R5	139		XPGBWT-HE-0000-00H51	
DV	6000 K	S2	148	XPGBWT-BE-0000-00JDV		
		R5	139		XPGBWT-HE-0000-00HDV	
50	6200 K	S2	148	XPGBWT-BE-0000-00J50		
		R5	139		XPGBWT-HE-0000-00H50	
E2	5700 K	S2	148	XPGBWT-BE-0000-00JE2		
		R5	139		XPGBWT-HE-0000-00HE2	
E3	5000 K	S2	148	XPGBWT-BE-0000-00JE3		
		R5	139		XPGBWT-HE-0000-00HE3	
		R4	130			
		R3	122			
		R2	114			XPGBWT-UE-0000-00EE3
F4	4750 K	S2	148	XPGBWT-BE-0000-00JF4		
		R5	139		XPGBWT-HE-0000-00HF4	
		R4	130			
		R3	122			
		R2	114			XPGBWT-UE-0000-00EF4
E4	4500 K	S2	148	XPGBWT-BE-0000-00JE4		
		R5	139		XPGBWT-HE-0000-00HE4	
		R4	130			
		R3	122			
		R2	114			XPGBWT-UE-0000-00EE4
F5	4250 K	S2	148	XPGBWT-BE-0000-00JF5		
		R5	139		XPGBWT-HE-0000-00HF5	
		R4	130			
		R3	122			
		R2	114			XPGBWT-UE-0000-00EF5

Note

- Cree LED maintains a tolerance of ±7% on flux and power measurements, ±0.005 on chromaticity (CCx, CCy) measurements and a tolerance of ±2 on CRI measurements. See the Measurements section (page 33).

© 2012-2024 Cree LED. The information in this document is subject to change without notice. Cree®, the Cree logo, the Cree LED logo and XLamp® are registered trademarks of Cree LED. UL® and the UL logo are registered trademarks of UL LLC. Other trademarks, product, and company names are the property of their respective owners and do not imply specific product and/or vendor endorsement, sponsorship or association.

APPENDIX - ORDER CODES NOT FOR NEW DESIGNS - CONTINUED

Chromaticity		Minimum Luminous Flux (lm) @ 350 mA		Order Codes		
Kit	CCT	Code	Flux (lm)	70 CRI Minimum	80 CRI Minimum	90 CRI Minimum
E5	4000 K	S2	148	XPGBWT-BE-0000-00JE5		
		R5	139		XPGBWT-HE-0000-00HE5	
		R4	130			
		R3	122			
		R2	114			XPGBWT-UE-0000-00EE5
F6	3750 K	S2	148	XPGBWT-BE-0000-00JF6		
		R5	139		XPGBWT-HE-0000-00HF6	
		R4	130			
		R3	122			
		R2	114			XPGBWT-UE-0000-00EF6
E6	3500 K	S2	148	XPGBWT-BE-0000-00JE6		
		R5	139		XPGBWT-HE-0000-00HE6	
		R4	130			
		R3	122			
		R2	114			XPGBWT-UE-0000-00EF6
F7	3250 K	S2	148	XPGBWT-BE-0000-00JF7		
		R5	139	XPGBWT-BE-0000-00HF7		
		R4	130		XPGBWT-HE-0000-00GF7	
E7	3000 K	S2	148	XPGBWT-BE-0000-00JE7		
		R5	139	XPGBWT-BE-0000-00HE7		
		R4	130		XPGBWT-HE-0000-00GE7	
F8	2850 K	S2	148	XPGBWT-BE-0000-00JF8		
		R5	139	XPGBWT-BE-0000-00HF8		
		R4	130		XPGBWT-HE-0000-00GF8	
		R3	122			
		R2	114			
		Q5	107			XPGBWT-UE-0000-00DF8
E8	2700 K	S2	148	XPGBWT-BE-0000-00JE8		
		R5	139	XPGBWT-BE-0000-00HE8		
		R4	130		XPGBWT-HE-0000-00GE8	
		R3	122			
		R2	114			
		Q5	107			XPGBWT-UE-0000-00DE8

Note

- Cree LED maintains a tolerance of ±7% on flux and power measurements, ±0.005 on chromaticity (CCx, CCy) measurements and a tolerance of ±2 on CRI measurements. See the Measurements section (page 33).

© 2012-2024 Cree LED. The information in this document is subject to change without notice. Cree®, the Cree logo, the Cree LED logo and XLamp® are registered trademarks of Cree LED. UL® and the UL logo are registered trademarks of UL LLC. Other trademarks, product, and company names are the property of their respective owners and do not imply specific product and/or vendor endorsement, sponsorship or association.

APPENDIX - ORDER CODES NOT FOR NEW DESIGNS - CONTINUED

The following order codes are active and valid order codes, but higher performance options are also available. Please see page 10 - page 13 for order codes of XLamp XP-G2 LEDs that could serve as alternatives for the order codes set forth below.

XP-G2 Standard T_J = 85 °C

Chromaticity		Minimum Luminous Flux (lm) @ 350 mA		Order Codes
Kit	CCT	Code	Flux (lm)	70 CRI Typical
51	6200 K	R5	139	XPGBWT-L1-0000-00H51
		R4	130	XPGBWT-L1-0000-00G51
		R3	122	XPGBWT-L1-0000-00F51
53	6000 K	R5	139	XPGBWT-L1-0000-00H53
		R4	130	XPGBWT-L1-0000-00G53
		R3	122	XPGBWT-L1-0000-00F53
50	6200 K	R5	139	XPGBWT-L1-0000-00H50
		R4	130	XPGBWT-L1-0000-00G50
		R3	122	XPGBWT-L1-0000-00F50
E1	6500 K	R5	139	XPGBWT-L1-0000-00HE1
		R4	130	XPGBWT-L1-0000-00GE1
		R3	122	XPGBWT-L1-0000-00FE1
E2	5700 K	R5	139	XPGBWT-L1-0000-00HE2
		R4	130	XPGBWT-L1-0000-00GE2
		R3	122	XPGBWT-L1-0000-00FE2

Chromaticity		Minimum Luminous Flux (lm) @ 350 mA		Order Codes	
Kit	CCT	Code	Flux (lm)	70 CRI Typical	80 CRI Minimum
E3	5000 K	R5	139	XPGBWT-01-0000-00HE3	
		R4	130	XPGBWT-01-0000-00GE3	
		R3	122	XPGBWT-01-0000-00FE3	
		R2	114	XPGBWT-01-0000-00EE3	
F4	4750 K	R5	139	XPGBWT-01-0000-00HF4	
		R4	130	XPGBWT-01-0000-00GF4	
		R3	122	XPGBWT-01-0000-00FF4	
		R2	114	XPGBWT-01-0000-00EF4	
E4	4500 K	R5	139	XPGBWT-01-0000-00HE4	
		R4	130	XPGBWT-01-0000-00GE4	
		R3	122	XPGBWT-01-0000-00FE4	
		R2	114	XPGBWT-01-0000-00EE4	

Note

- Cree LED maintains a tolerance of ±7% on flux and power measurements, ±0.005 on chromaticity (CCx, CCy) measurements and a tolerance of ±2 on CRI measurements. See the Measurements section (page 33).

© 2012-2024 Cree LED. The information in this document is subject to change without notice. Cree®, the Cree logo, the Cree LED logo and XLamp® are registered trademarks of Cree LED. UL® and the UL logo are registered trademarks of UL LLC. Other trademarks, product, and company names are the property of their respective owners and do not imply specific product and/or vendor endorsement, sponsorship or association.

APPENDIX - ORDER CODES NOT FOR NEW DESIGNS - CONTINUED

Chromaticity		Minimum Luminous Flux (lm) @ 350 mA		Order Codes	
Kit	CCT	Code	Flux (lm)	70 CRI Typical	80 CRI Minimum
F5	4250 K	R5	139	XPGBWT-01-0000-00HF5	
		R4	130	XPGBWT-01-0000-00GF5	
		R3	122	XPGBWT-01-0000-00FF5	
		R2	114	XPGBWT-01-0000-00EF5	
E5	4000 K	R5	139	XPGBWT-01-0000-00HE5	
		R4	130	XPGBWT-01-0000-00GE5	
		R3	122	XPGBWT-01-0000-00FE5	XPGBWT-H1-0000-00FE5
		R2	114	XPGBWT-01-0000-00EE5	XPGBWT-H1-0000-00EE5
		Q5	107		XPGBWT-H1-0000-00DE5
Z5	4000- K	R3	122		XPGBWT-H1-0000-00FZ5
		R2	114		XPGBWT-H1-0000-00EZ5
		Q5	107		XPGBWT-H1-0000-00DZ5

Chromaticity		Minimum Luminous Flux (lm) @ 350 mA		Order Codes			
Kit	CCT	Code	Flux (lm)	70 CRI Typical	80 CRI Typical	80 CRI Minimum	90 CRI Minimum
F6	3750 K	R4	130	XPGBWT-01-0000-00GF6			
		R3	122	XPGBWT-01-0000-00FF6	XPGBWT-L1-0000-00FF6	XPGBWT-H1-0000-00FF6	
		R2	114	XPGBWT-01-0000-00EF6	XPGBWT-L1-0000-00EF6	XPGBWT-H1-0000-00EF6	
		Q5	107	XPGBWT-01-0000-00DF6	XPGBWT-L1-0000-00DF6	XPGBWT-H1-0000-00DF6	
E6	3500 K	R4	130	XPGBWT-01-0000-00GE6			
		R3	122	XPGBWT-01-0000-00FE6	XPGBWT-L1-0000-00FE6	XPGBWT-H1-0000-00FE6	
		R2	114	XPGBWT-01-0000-00EE6	XPGBWT-L1-0000-00EE6	XPGBWT-H1-0000-00EE6	
		Q5	107	XPGBWT-01-0000-00DE6	XPGBWT-L1-0000-00DE6	XPGBWT-H1-0000-00DE6	
Z6	3500 K	R3	122		XPGBWT-L1-0000-00FZ6	XPGBWT-H1-0000-00FZ6	
		R2	114		XPGBWT-L1-0000-00EZ6	XPGBWT-H1-0000-00EZ6	
		Q5	107		XPGBWT-L1-0000-00DZ6	XPGBWT-H1-0000-00DZ6	
F7	3250 K	R4	130	XPGBWT-01-0000-00GF7			
		R3	122	XPGBWT-01-0000-00FF7	XPGBWT-L1-0000-00FF7	XPGBWT-H1-0000-00FF7	
		R2	114	XPGBWT-01-0000-00EF7	XPGBWT-L1-0000-00EF7	XPGBWT-H1-0000-00EF7	
		Q5	107		XPGBWT-L1-0000-00DF7	XPGBWT-H1-0000-00DF7	

Note

- Cree LED maintains a tolerance of ±7% on flux and power measurements, ±0.005 on chromaticity (CCx, CCy) measurements and a tolerance of ±2 on CRI measurements. See the Measurements section (page 33).

© 2012-2024 Cree LED. The information in this document is subject to change without notice. Cree®, the Cree logo, the Cree LED logo and XLamp® are registered trademarks of Cree LED. UL® and the UL logo are registered trademarks of UL LLC. Other trademarks, product, and company names are the property of their respective owners and do not imply specific product and/or vendor endorsement, sponsorship or association.

APPENDIX - ORDER CODES NOT FOR NEW DESIGNS - CONTINUED

Chromaticity		Minimum Luminous Flux (lm) @ 350 mA		Order Codes			
Kit	CCT	Code	Flux (lm)	70 CRI Typical	80 CRI Typical	80 CRI Minimum	90 CRI Minimum
E7	3000 K	R3	122	XPGBWT-01-0000-00FE7			
		R2	114	XPGBWT-01-0000-00EE7	XPGBWT-L1-0000-00EE7	XPGBWT-H1-0000-00EE7	
		Q5	107		XPGBWT-L1-0000-00DE7	XPGBWT-H1-0000-00DE7	
		Q4	100		XPGBWT-L1-0000-00CE7	XPGBWT-H1-0000-00CE7	XPGBWT-U1-0000-00CE7
		Q3	93.9				XPGBWT-U1-0000-00BE7
		Q2	87.4				XPGBWT-U1-0000-00AE7
		P4	80.6				XPGBWT-U1-0000-009E7
		P3	73.9				XPGBWT-U1-0000-008E7
Z7	3000 K	R2	114		XPGBWT-L1-0000-00EZ7	XPGBWT-H1-0000-00EZ7	
		Q5	107		XPGBWT-L1-0000-00DZ7	XPGBWT-H1-0000-00DZ7	
		Q4	100		XPGBWT-L1-0000-00CZ7	XPGBWT-H1-0000-00CZ7	XPGBWT-U1-0000-00CZ7
		Q3	93.9				XPGBWT-U1-0000-00BZ7
		Q2	87.4				XPGBWT-U1-0000-00AZ7
		P4	80.6				XPGBWT-U1-0000-009Z7
		P3	73.9				XPGBWT-U1-0000-008Z7
F8	2850 K	R2	114		XPGBWT-L1-0000-00EF8	XPGBWT-H1-0000-00EF8	
		Q5	107		XPGBWT-L1-0000-00DF8	XPGBWT-H1-0000-00DF8	
		Q4	100		XPGBWT-L1-0000-00CF8	XPGBWT-H1-0000-00CF8	XPGBWT-U1-0000-00CF8
		Q3	93.9		XPGBWT-L1-0000-00BF8	XPGBWT-H1-0000-00BF8	XPGBWT-U1-0000-00BF8
		Q2	87.4				XPGBWT-U1-0000-00AF8
		P4	80.6				XPGBWT-U1-0000-009F8
		P3	73.9				XPGBWT-U1-0000-008F8
		P2	67.2				XPGBWT-U1-0000-007F8
E8	2700 K	R2	114		XPGBWT-L1-0000-00EE8	XPGBWT-H1-0000-00EE8	
		Q5	107		XPGBWT-L1-0000-00DE8	XPGBWT-H1-0000-00DE8	
		Q4	100		XPGBWT-L1-0000-00CE8	XPGBWT-H1-0000-00CE8	
		Q3	93.9		XPGBWT-L1-0000-00BE8	XPGBWT-H1-0000-00BE8	XPGBWT-U1-0000-00BE8
		Q2	87.4				XPGBWT-U1-0000-00AE8
		P4	80.6				XPGBWT-U1-0000-009E8
		P3	73.9				XPGBWT-U1-0000-008E8
		P2	67.2				XPGBWT-U1-0000-007E8
Z8	2700 K	Q5	107		XPGBWT-L1-0000-00DZ8	XPGBWT-H1-0000-00DZ8	
		Q4	100		XPGBWT-L1-0000-00CZ8	XPGBWT-H1-0000-00CZ8	
		Q3	93.9		XPGBWT-L1-0000-00BZ8	XPGBWT-H1-0000-00BZ8	
		Q2	87.4				XPGBWT-U1-0000-00AZ8
		P4	80.6				XPGBWT-U1-0000-009Z8
		P3	73.9				XPGBWT-U1-0000-008Z8
		P2	67.2				XPGBWT-U1-0000-007Z8

Note

- Cree LED maintains a tolerance of ±7% on flux and power measurements, ±0.005 on chromaticity (CCx, CCy) measurements and a tolerance of ±2 on CRI measurements. See the Measurements section (page 33).

© 2012-2024 Cree LED. The information in this document is subject to change without notice. Cree®, the Cree logo, the Cree LED logo and XLamp® are registered trademarks of Cree LED. UL® and the UL logo are registered trademarks of UL LLC. Other trademarks, product, and company names are the property of their respective owners and do not imply specific product and/or vendor endorsement, sponsorship or association.