XLamp® XR-E LED

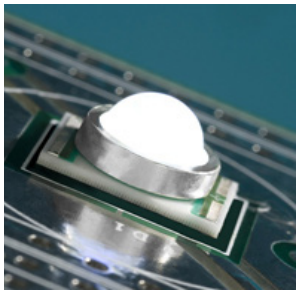

PRODUCT DESCRIPTION

The XLamp® XR-E LED is leading the LED lighting revolution with its unprecedented lighting-class brightness, efficacy, lifetime and quality of light. These lighting-class features enable the XLamp XR-E LED to replace many traditional light sources and save money with energy-efficient light and long lifetimes.

XLamp LEDs bring high performance and quality of light to a wide range of lighting applications, including color-changing lighting, portable and personal lighting, outdoor lighting, indoor directional lighting, commercial lighting and emergency-vehicle lighting.

FEATURES

- Available in white (2600 K to 10,000 K CCT)
- Maximum drive current: up to 1000 mA
- Maximum junction temperature: 150 °C
- Industry-leading JEDEC standard pre-qualification testing
- Reflow solderable – JEDEC
- J-STD-020C compatible
- Electrically neutral thermal path
- RoHS and REACH compliant
- UL® recognized component (E349212)

TABLE OF CONTENTS

Characteristics 2
Order Codes Suggested for New Designs 3
Relative Spectral Power Distribution 6
Relative Flux vs. Junction Temperature..... 6
Electrical Characteristics..... 7
Relative Flux vs. Current 7
Typical Spatial Distribution..... 8
Thermal design 8
Performance Groups - Brightness 9
Performance Groups - Chromaticity 9
Standard Chromaticity Regions Plotted on the 1931 CIE Curve 11
Bin and Order Code Formats..... 12
Reflow Soldering Characteristics..... 13
Notes 14
Mechanical Dimensions 16
Tape and Reel..... 17
Packaging..... 18
Appendix - Order Codes Not For New Designs..... 19

Cree LED / 4001 E. Hwy. 54, Suite 2000 / Durham, NC 27709 USA / +1.919.313.5330 / www.cree-led.com

© 2006-2024 Cree LED. The information in this document is subject to change without notice. Cree®, the Cree logo, the Cree LED logo and XLamp® are registered trademarks of Cree LED. UL® and the UL logo are registered trademarks of UL LLC.

CHARACTERISTICS

Characteristics	Unit	Minimum	Typical	Maximum
Thermal Resistance, junction to solder point	°C/W		5	
Viewing Angle (FWHM)	degrees		90	
Temperature Coefficient of Voltage	mV/°C		-1.3	
ESD Classification (HBM per Mil-Std-883D)			Class 3B	
DC Forward Current ≥ 5000 K	mA			1000
DC Forward Current < 5000 K	mA			700
DC Pulse Current (@ 1 kHz, 10% duty cycle)	A			1.8
Reverse Voltage	V			5
Forward Voltage (@ 350 mA)	V		2.9	3.25
Forward Voltage (@ 700 mA)	V		3.08	
Forward Voltage (@ 1000 mA) ≥ 5000 K	V		3.2	
LED Junction Temperature	°C			150

© 2006-2024 Cree LED. The information in this document is subject to change without notice. Cree®, the Cree logo, the Cree LED logo and XLamp® are registered trademarks of Cree LED. UL® and the UL logo are registered trademarks of UL LLC.

ORDER CODES SUGGESTED FOR NEW DESIGNS (T_J = 25 °C)

The following tables list standard kit numbers and performance bins for XR-E white LEDs. Kit numbers completely describe an order code's chromaticity regions and luminous flux range. For a complete description of the order-code nomenclature, please consult the Bin and Order Code Formats section (page 12).

Minimum Luminous Flux (lm) @ 350 mA		Chromaticity Regions	Kit Number	Order Code
Group	Flux (lm)			
Cool White (5000 K – 10,000 K)				
R4	130	WA, WB, WC, WD, WE, WF, WG, WH, WJ, WK, WM, WN, WP	00G01	XREWHT-L1-0000-00G01
		WC, WD, WF, WG	00G02	XREWHT-L1-0000-00G02
		WC, WD, WF, WG, WH, WJ, WN, WP	00G03	XREWHT-L1-0000-00G03
R5	139	WA, WB, WC, WD, WE, WF, WG, WH, WJ, WK, WM, WN, WP	00H01	XREWHT-L1-0000-00H01
		WC, WD, WF, WG	00H02	XREWHT-L1-0000-00H02
		WC, WD, WF, WG, WH, WJ, WN, WP	00H03	XREWHT-L1-0000-00H03
S2	148	WA, WB, WC, WD, WE, WF, WG, WH, WJ, WK, WM, WN, WP	00J01	XREWHT-L1-0000-00J01
		WC, WD, WF, WG	00J02	XREWHT-L1-0000-00J02
		WC, WD, WF, WG, WH, WJ, WN, WP	00J03	XREWHT-L1-0000-00J03
S3	156	WA, WB, WC, WD, WE, WF, WG, WH, WJ, WK, WM, WN, WP	00K01	XREWHT-L1-0000-00K01
		WC, WD, WF, WG	00K02	XREWHT-L1-0000-00K02
		WC, WD, WF, WG, WH, WJ, WN, WP	00K03	XREWHT-L1-0000-00K03

Notes:

- For additional order codes NOT recommended for new designs please see the Appendix section starting on page 19.
- Cree LED maintains a tolerance of ±7% on flux and power measurements, ±0.005 on chromaticity (CCx, CCy) measurements and ±2 on CRI measurements. See the Measurements section (page 14).
- XR-E LED order codes specify only a minimum flux bin and not a maximum. Cree LED may ship reels in flux bins higher than the minimum specified by the order code without advance notice. Shipments will always adhere to the chromaticity or DWL bin restrictions specified by the order code.
- Typical CRI for Cool White & Neutral White (3700 K – 10,000 K CCT) is 75.
- Typical CRI for Warm White (2600 K – 3700 K CCT) is 80.

© 2006-2024 Cree LED. The information in this document is subject to change without notice. Cree®, the Cree logo, the Cree LED logo and XLamp® are registered trademarks of Cree LED. UL® and the UL logo are registered trademarks of UL LLC.

ORDER CODES SUGGESTED FOR NEW DESIGNS (T_J = 25 °C) - CONTINUED

Minimum Luminous Flux (lm) @ 350 mA		Chromaticity Regions	CCT	Kit Number	Order Code
Group	Flux (lm)				
Neutral White (3700 K - 5000 K)					
P4	80.6	*5C, 5D, 6A, 6B*	*3700 K*	*009F6*	*XREWHT-L1-0000-009F6*
Q2	87.4	*5C, 5D, 6A, 6B*	*3700 K*	*00AF6*	*XREWHT-L1-0000-00AF6*
Q3	93.9	*4C, 4D, 5A, 5B*	*4300 K*	*00BF5*	*XREWHT-L1-0000-00BF5*
		5A, 5B, 5C, 5D	*4000 K*	*00BE5*	*XREWHT-L1-0000-00BE5*
		5C, 5D, 6A, 6B	*3700 K*	*00BF6*	*XREWHT-L1-0000-00BF6*
Q4	100	*4C, 4D, 5A, 5B*	*4300 K*	*00CF5*	*XREWHT-L1-0000-00CF5*
		5A, 5B, 5C, 5D	*4000 K*	*00CE5*	*XREWHT-L1-0000-00CE5*
		5C, 5D, 6A, 6B	*3700 K*	*00CF6*	*XREWHT-L1-0000-00CF6*
Q5	107	*3C, 3D, 4A, 4B*	*4750 K*	*00DF4*	*XREWHT-L1-0000-00DF4*
		4A, 4B, 4C, 4D	*4500 K*	*00DE4*	*XREWHT-L1-0000-00DE4*
		4C, 4D, 5A, 5B	*4300 K*	*00DF5*	*XREWHT-L1-0000-00DF5*
		5A, 5B, 5C, 5D	*4000 K*	*00DE5*	*XREWHT-L1-0000-00DE5*
R2	114	*3C, 3D, 4A, 4B*	*4750 K*	*00EF4*	*XREWHT-L1-0000-00EF4*
		4A, 4B, 4C, 4D	*4500 K*	*00EE4*	*XREWHT-L1-0000-00EE4*
R3	122	3A, 3B, 3C, 3D	5000 K	00FE3	XREWHT-L1-0000-00FE3
		3C, 3D, 4A, 4B	4750 K	00FF4	XREWHT-L1-0000-00FF4
		4A, 4B, 4C, 4D	4500 K	00FE4	XREWHT-L1-0000-00FE4
R4	130	3A, 3B, 3C, 3D	5000 K	00GE3	XREWHT-L1-0000-00GE3
R5	139	3A, 3B, 3C, 3D	5000 K	00HE3	XREWHT-L1-0000-00HE3
S2	148	3A, 3B, 3C, 3D	5000 K	00JE3	XREWHT-L1-0000-00JE3

Notes:

- For additional order codes NOT recommended for new designs please see the Appendix section starting on page 19.
- Cree LED maintains a tolerance of ±7% on flux and power measurements, ±0.005 on chromaticity (CCx, CCy) measurements and ±2 on CRI measurements. See the Measurements section (page 14).
- XR-E LED order codes specify only a minimum flux bin and not a maximum. Cree LED may ship reels in flux bins higher than the minimum specified by the order code without advance notice. Shipments will always adhere to the chromaticity or DWL bin restrictions specified by the order code.
- Typical CRI for Cool White & Neutral White (3700 K – 10,000 K CCT) is 75.
- Typical CRI for Warm White (2600 K – 3700 K CCT) is 80.

© 2006-2024 Cree LED. The information in this document is subject to change without notice. Cree®, the Cree logo, the Cree LED logo and XLamp® are registered trademarks of Cree LED. UL® and the UL logo are registered trademarks of UL LLC.

ORDER CODES SUGGESTED FOR NEW DESIGNS (T_J = 25 °C) - CONTINUED COPY

Minimum Luminous Flux (lm) @ 350 mA		Chromaticity Regions	CCT	Kit Number	Order Code
Group	Flux (lm)				
Warm White (2600 K - 3700 K)					
P2	67.2	7C, 7D, 8A, 8B	2900 K	007F8	XREWHT-L1-0000-007F8
		8A, 8B, 8C, 8D	2700 K	007E8	XREWHT-L1-0000-007E8
P3	73.9	6C, 6D, 7A, 7B	3200 K	008F7	XREWHT-L1-0000-008F7
		7A, 7B, 7C, 7D	3000 K	008E7	XREWHT-L1-0000-008E7
		7C, 7D, 8A, 8B	2900 K	008F8	XREWHT-L1-0000-008F8
		8A, 8B, 8C, 8D	2700 K	008E8	XREWHT-L1-0000-008E8
P4	80.6	6A, 6B, 6C, 6D	3500 K	009E6	XREWHT-L1-0000-009E6
		6C, 6D, 7A, 7B	3200 K	009F7	XREWHT-L1-0000-009F7
		7A, 7B, 7C, 7D	3000 K	009E7	XREWHT-L1-0000-009E7
		7C, 7D, 8A, 8B	2900 K	009F8	XREWHT-L1-0000-009F8
		8A, 8B, 8C, 8D	2700 K	008E9	XREWHT-L1-0000-009E8
Q2	87.4	6A, 6B, 6C, 6D	3500 K	00AE6	XREWHT-L1-0000-00AE6
		6C, 6D, 7A, 7B	3200 K	00AF7	XREWHT-L1-0000-00AF7
		7A, 7B, 7C, 7D	3000 K	00AE7	XREWHT-L1-0000-00AE7
		7C, 7D, 8A, 8B	2900 K	00AF8	XREWHT-L1-0000-00AF8
		8A, 8B, 8C, 8D	2700 K	00AE9	XREWHT-L1-0000-00AE8
Q3	93.9	6A, 6B, 6C, 6D	3500 K	00BE6	XREWHT-L1-0000-00BE6
		6C, 6D, 7A, 7B	3200 K	00BF7	XREWHT-L1-0000-00BF7
		7A, 7B, 7C, 7D	3000 K	00BE7	XREWHT-L1-0000-00BE7
Q4	100	6A, 6B, 6C, 6D	3500 K	00CE6	XREWHT-L1-0000-00CE6

Notes:

- For additional order codes NOT recommended for new designs please see the Appendix section starting on page 19.
- Cree LED maintains a tolerance of ±7% on flux and power measurements, ±0.005 on chromaticity (CCx, CCy) measurements and ±2 on CRI measurements. See the Measurements section (page 14).
- XR-E LED order codes specify only a minimum flux bin and not a maximum. Cree LED may ship reels in flux bins higher than the minimum specified by the order code without advance notice. Shipments will always adhere to the chromaticity or DWL bin restrictions specified by the order code.
- Typical CRI for Cool White & Neutral White (3700 K – 10,000 K CCT) is 75.
- Typical CRI for Warm White (2600 K – 3700 K CCT) is 80.

© 2006-2024 Cree LED. The information in this document is subject to change without notice. Cree®, the Cree logo, the Cree LED logo and XLamp® are registered trademarks of Cree LED. UL® and the UL logo are registered trademarks of UL LLC.

RELATIVE SPECTRAL POWER DISTRIBUTION

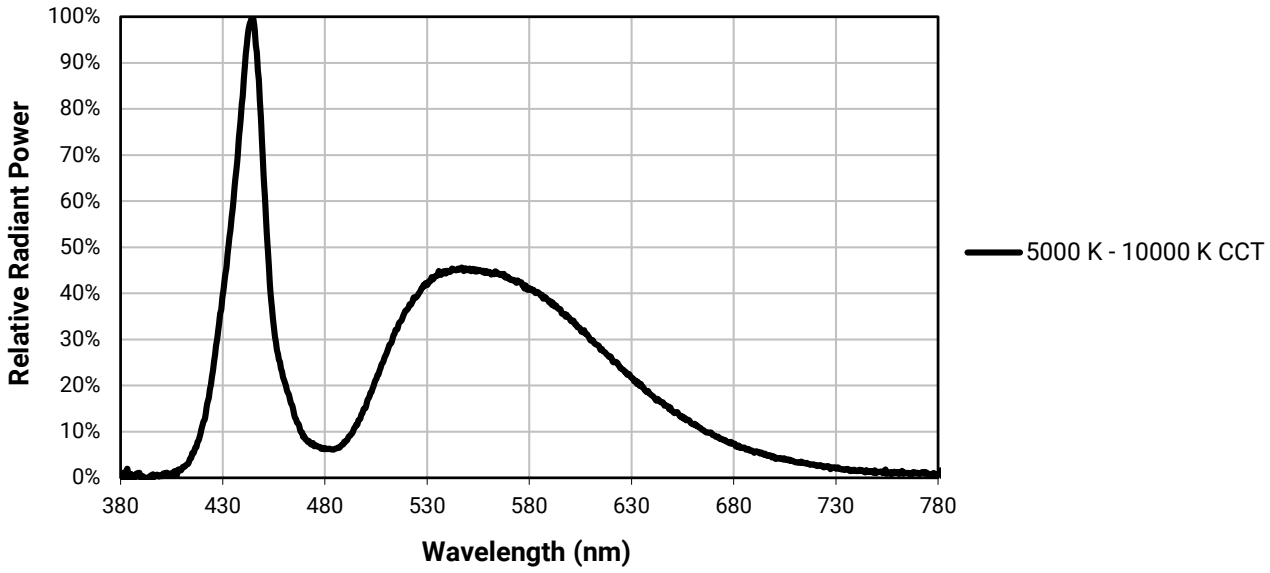

RELATIVE FLUX VS. JUNCTION TEMPERATURE (I_F = 350 mA)

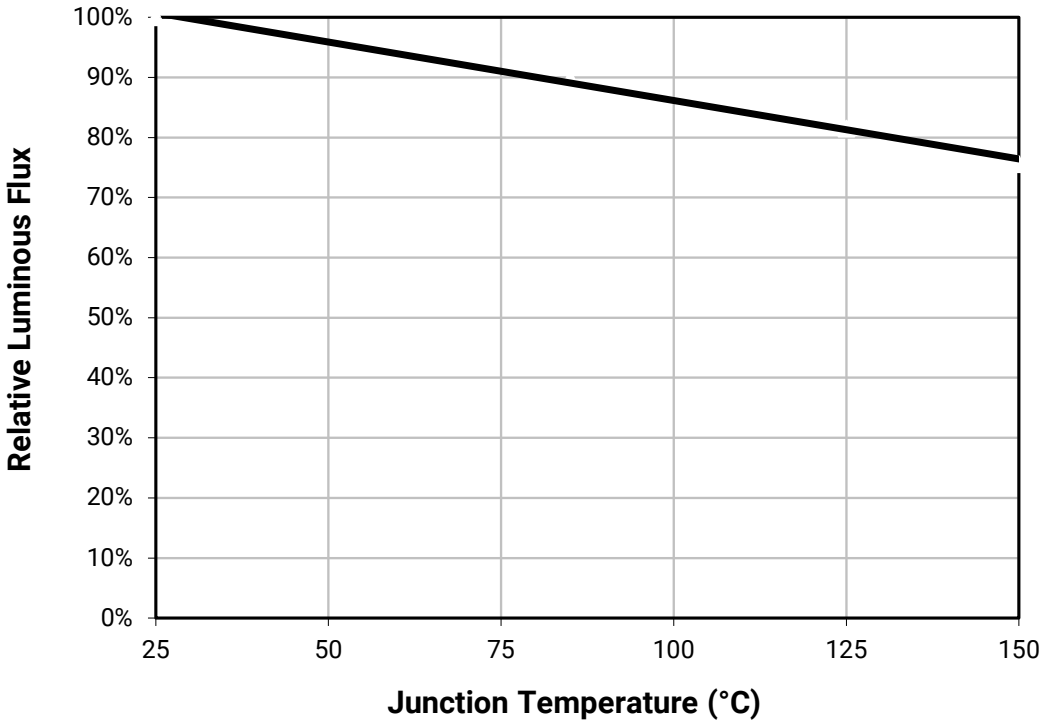

© 2006-2024 Cree LED. The information in this document is subject to change without notice. Cree®, the Cree logo, the Cree LED logo and XLamp® are registered trademarks of Cree LED. UL® and the UL logo are registered trademarks of UL LLC.

ELECTRICAL CHARACTERISTICS (T_J = 25 ˚C)

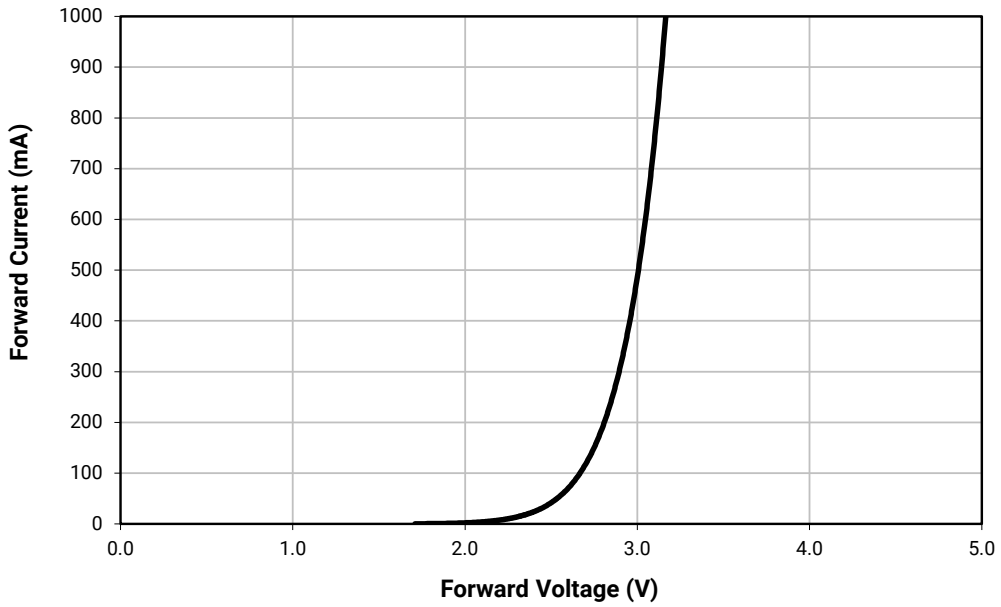

RELATIVE FLUX VS. CURRENT (T_J = 25 ˚C)

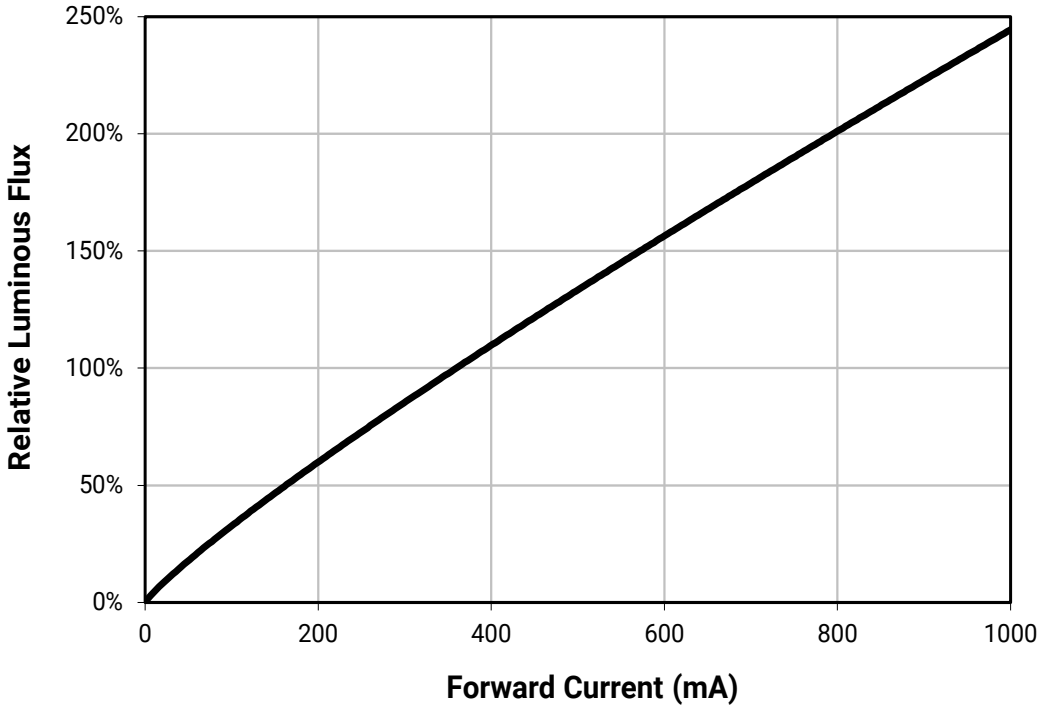

© 2006-2024 Cree LED. The information in this document is subject to change without notice. Cree®, the Cree logo, the Cree LED logo and XLamp® are registered trademarks of Cree LED. UL® and the UL logo are registered trademarks of UL LLC.

TYPICAL SPATIAL DISTRIBUTION

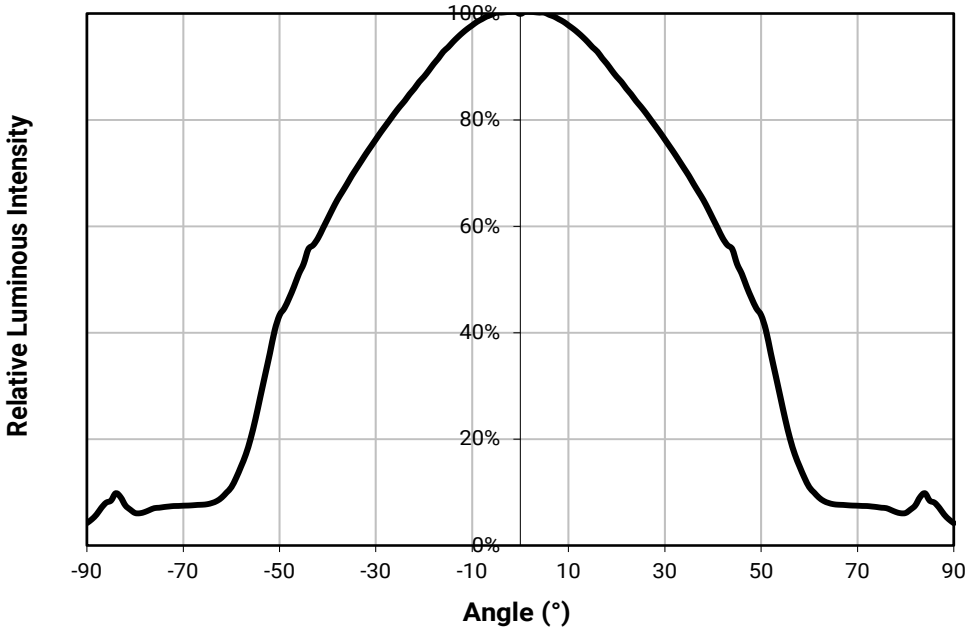

THERMAL DESIGN

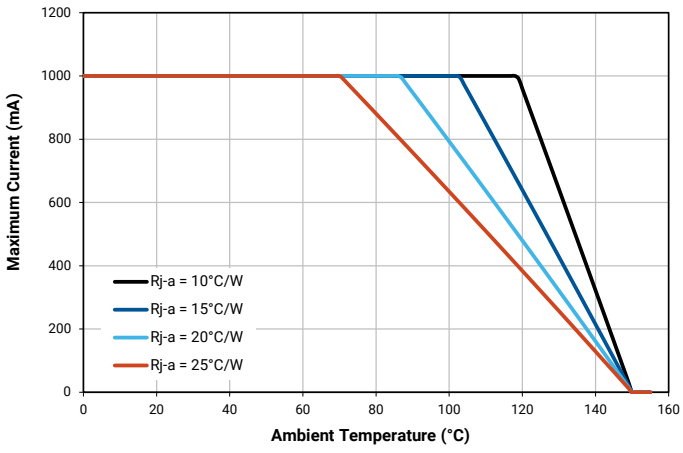

≥ 5,000 K

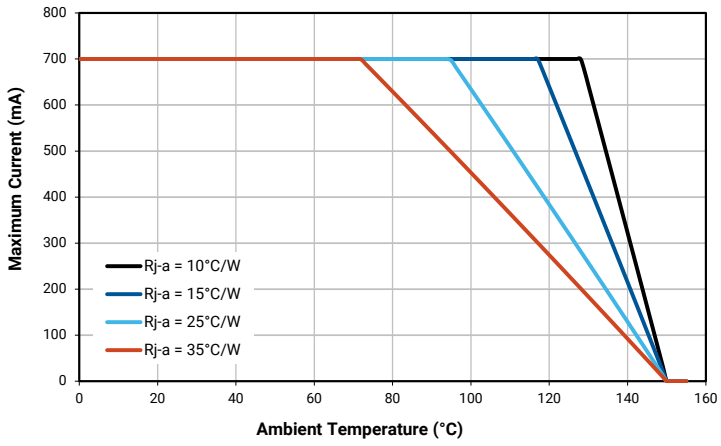

< 5,000 K

© 2006-2024 Cree LED. The information in this document is subject to change without notice. Cree®, the Cree logo, the Cree LED logo and XLamp® are registered trademarks of Cree LED. UL® and the UL logo are registered trademarks of UL LLC.

PERFORMANCE GROUPS - BRIGHTNESS

XR-E LEDs are tested for luminous flux and placed into one of the following luminous-lux groups:

Group	Minimum Luminous Flux @ 350 mA (lm)	Maximum Luminous Flux @ 350 mA (lm)
P2	67.2	73.9
P3	73.9	80.6
P4	80.6	87.4
Q2	87.4	93.9
Q3	93.9	100
Q4	100	107
Q5	107	114
R2	114	122
R3	122	130
R4	130	139
R5	139	148
S2	148	156
S3	156	164
S4	164	172
S5	172	180
S6	180	188

PERFORMANCE GROUPS - CHROMATICITY

XR-E LEDs are tested for chromaticity and placed into one of the regions defined by the bounding coordinates below.

Region	x	y	Region	x	y
WK	.283	.284	WF	.314	.355
	.295	.297		.316	.332
	.298	.288		.306	.322
	.287	.276		.301	.342
WA	.292	.306	WP	.317	.319
	.295	.297		.329	.330
	.283	.284		.329	.318
	.279	.291		.318	.308
WM	.295	.297	WD	.329	.345
	.308	.311		.329	.330
	.310	.300		.317	.319
	.298	.288		.316	.332

© 2006-2024 Cree LED. The information in this document is subject to change without notice. Cree®, the Cree logo, the Cree LED logo and XLamp® are registered trademarks of Cree LED. UL® and the UL logo are registered trademarks of UL LLC.

PERFORMANCE GROUPS - CHROMATICITY (CONTINUED)

Region	x	y	Region	x	y
WB	.306	.322	WG	.329	.369
	.308	.311		.329	.345
	.295	.297		.316	.332
	.292	.306		.314	.355
WE	.301	.342	WJ	.329	.330
	.306	.322		.329	.345
	.292	.306		.346	.359
	.287	.321		.344	.342
WN	.308	.311	WH	.348	.384
	.317	.319		.346	.359
	.318	.308		.329	.345
	.310	.300		.329	.369
WC	.316	.332			
	.317	.319			
	.308	.311			
	.306	.322			

Region	x	y	Region	x	y	Region	x	y	Region	x	y
3A	.3371	.3490	3B	.3376	.3616	3C	.3463	.3687	3D	.3451	.3554
	.3451	.3554		.3463	.3687		.3551	.3760		.3533	.3620
	.3440	.3428		.3451	.3554		.3533	.3620		.3515	.3487
	.3366	.3369		.3371	.3490		.3451	.3554		.3440	.3428
4A	.3512	.3465	4B	.3529	.3597	4C	.3615	.3659	4D	.3590	.3521
	.3529	.3597		.3548	.3736		.3641	.3804		.3615	.3659
	.3615	.3659		.3641	.3804		.3736	.3874		.3702	.3722
	.3590	.3521		.3615	.3659		.3702	.3722		.3670	.3578
5A	.3670	.3578	5B	.3702	.3722	5C	.3825	.3798	5D	.3783	.3646
	.3702	.3722		.3736	.3874		.3869	.3958		.3825	.3798
	.3825	.3798		.3869	.3958		.4006	.4044		.3950	.3875
	.3783	.3646		.3825	.3798		.3950	.3875		.3898	.3716
6A	.3889	.3690	6B	.3941	.3848	6C	.4080	.3916	6D	.4017	.3751
	.3941	.3848		.3996	.4015		.4146	.4089		.4080	.3916
	.4080	.3916		.4146	.4089		.4299	.4165		.4221	.3984
	.4017	.3751		.4080	.3916		.4221	.3984		.4147	.3814
7A	.4147	.3814	7B	.4221	.3984	7C	.4342	.4028	7D	.4259	.3853
	.4221	.3984		.4299	.4165		.4430	.4212		.4342	.4028
	.4342	.4028		.4430	.4212		.4562	.4260		.4465	.4071
	.4259	.3853		.4342	.4028		.4465	.4071		.4373	.3893
8A	.4373	.3893	8B	.4465	.4071	8C	.4582	.4099	8D	.4483	.3919
	.4465	.4071		.4562	.4260		.4687	.4289		.4582	.4099
	.4582	.4099		.4687	.4289		.4813	.4319		.4700	.4126
	.4483	.3919		.4582	.4099		.4700	.4126		.4593	.3944

© 2006-2024 Cree LED. The information in this document is subject to change without notice. Cree®, the Cree logo, the Cree LED logo and XLamp® are registered trademarks of Cree LED. UL® and the UL logo are registered trademarks of UL LLC.

STANDARD CHROMATICITY REGIONS PLOTTED ON THE 1931 CIE CURVE

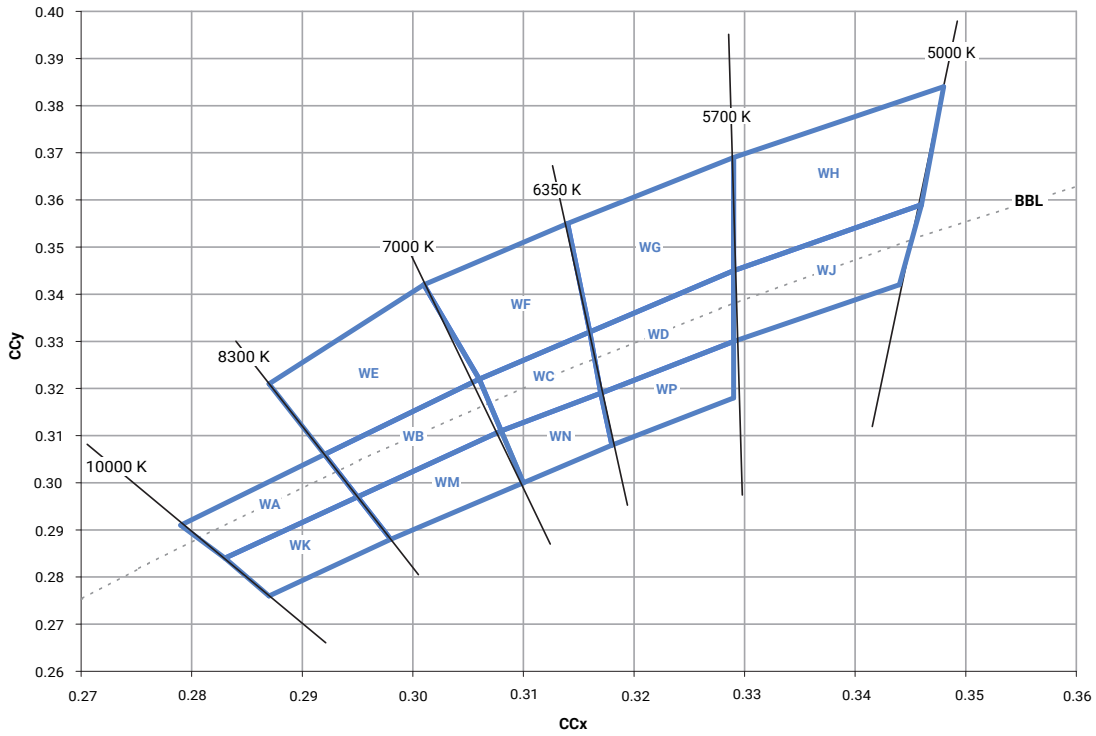

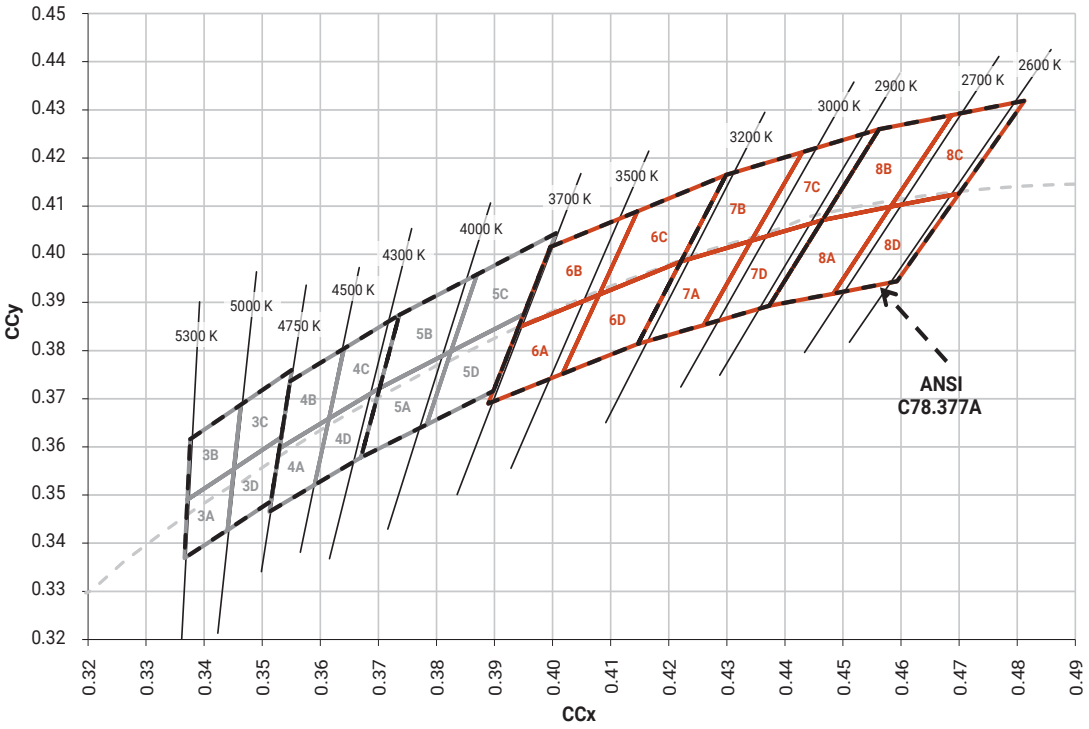

© 2006-2024 Cree LED. The information in this document is subject to change without notice. Cree®, the Cree logo, the Cree LED logo and XLamp® are registered trademarks of Cree LED. UL® and the UL logo are registered trademarks of UL LLC.

BIN AND ORDER CODE FORMATS

Bin codes and order codes are configured in the following manner:

Order Code

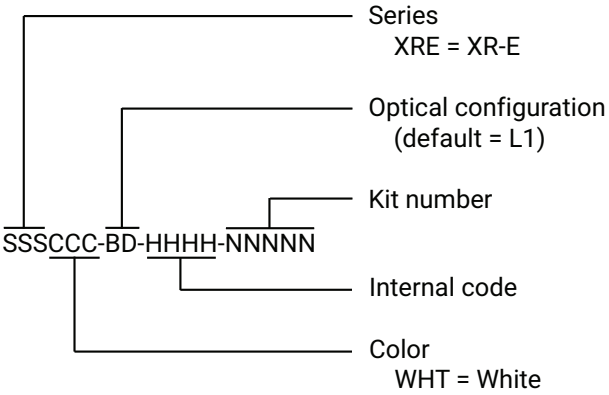

Bin Code

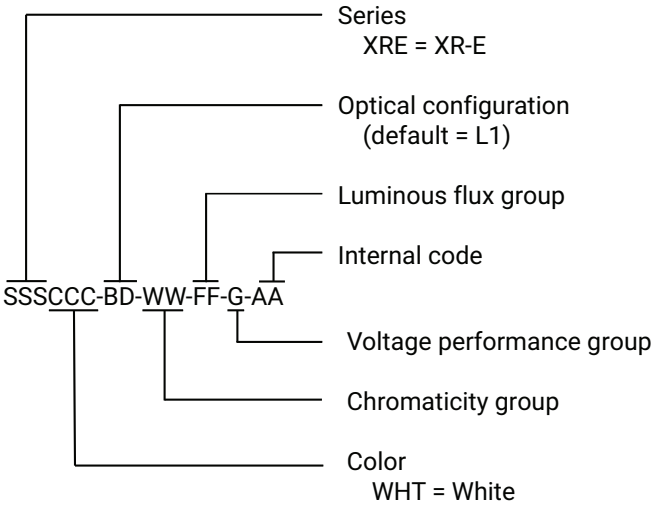

© 2006-2024 Cree LED. The information in this document is subject to change without notice. Cree®, the Cree logo, the Cree LED logo and XLamp® are registered trademarks of Cree LED. UL® and the UL logo are registered trademarks of UL LLC.

REFLOW SOLDERING CHARACTERISTICS

In testing, Cree LED has found XR-E LEDs to be compatible with JEDEC J-STD-020C, using the parameters listed below. As a general guideline, Cree LED recommends that users follow the recommended soldering profile provided by the manufacturer of the solder paste used, and therefore it is the lamp or luminaire manufacturer's responsibility to determine applicable soldering requirements.

Note that this general guideline may not apply to all PCB designs and configurations of reflow soldering equipment.

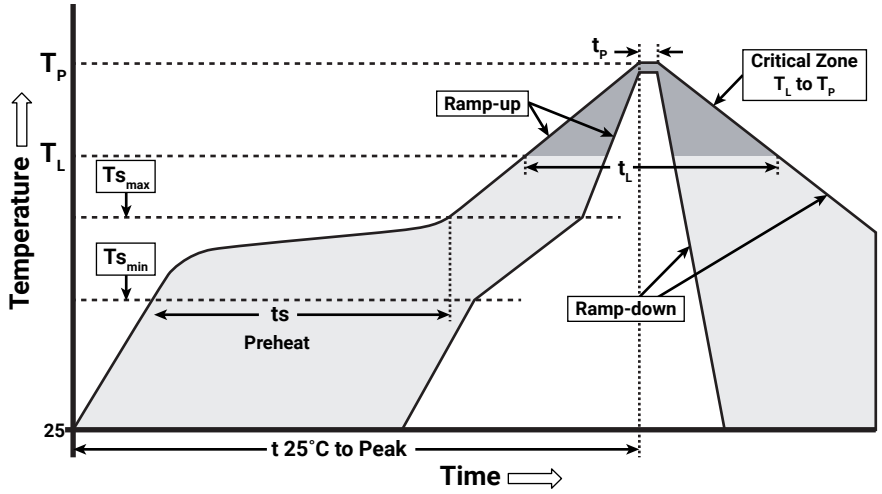

IPC/JEDEC J-STD-020C

Profile Feature	Lead-Free Solder
Average Ramp-Up Rate (Ts_{max} to Tp)	1.2 °C/second
Preheat: Temperature Min (Ts_{min})	120 °C
Preheat: Temperature Max (Ts_{max})	170 °C
Preheat: Time (ts_{min} to ts_{max})	65-150 seconds
Time Maintained Above: Temperature (T_L)	217 °C
Time Maintained Above: Time (t_L)	45-90 seconds
Peak/Classification Temperature (Tp)	235 - 245 °C
Time Within 5 °C of Actual Peak Temperature (tp)	20-40 seconds
Ramp-Down Rate	1 - 6 °C/second
Time 25 °C to Peak Temperature	4 minutes max.

Note: All temperatures refer to topside of the package, measured on the package body surface.

© 2006-2024 Cree LED. The information in this document is subject to change without notice. Cree®, the Cree logo, the Cree LED logo and XLamp® are registered trademarks of Cree LED. UL® and the UL logo are registered trademarks of UL LLC.

NOTES

Measurements

The luminous flux, radiant power, chromaticity, forward voltage and CRI measurements in this document are binning specifications only and solely represent product measurements as of the date of shipment. These measurements will change over time based on a number of factors that are not within Cree LED's control and are not intended or provided as operational specifications for the products. Calculated values are provided for informational purposes only and are not intended or provided as specifications.

Pre-Release Qualification Testing

Please read the LED Reliability Overview for details of the qualification process Cree LED applies to ensure long-term reliability for XLamp LEDs and details of Cree LED's pre-release qualification testing for XLamp LEDs.

Lumen Maintenance

Cree LED now uses standardized IES LM-80-08 and TM-21-11 methods for collecting long-term data and extrapolating LED lumen maintenance. For information on the specific LM-80 data sets available for this LED, refer to the public LM-80 results document.

Please read the Long-Term Lumen Maintenance application note for more details on Cree LED's lumen maintenance testing and forecasting. Please read the Thermal Management application note for details on how thermal design, ambient temperature, and drive current affect the LED junction temperature.

Moisture Sensitivity

Cree LED recommends keeping XLamp XR-E LEDs in the provided, resealable moisture-barrier packaging (MBP) until immediately prior to soldering. Unopened MBPs that contain XLamp LEDs do not need special storage for moisture sensitivity.

Once the MBP is opened, XLamp XR-E LEDs should be handled and stored as MSL 4 per JEDEC J-STD-033, meaning they have limited exposure time before damage to the LED may occur during the soldering operation. The table on the right specifies the maximum exposure time in days depending on temperature and humidity conditions. LEDs with exposure time longer than the specified maximums must be baked according to the baking conditions listed below.

Temp.	Maximum Percent Relative Humidity						
	30%	40%	50%	60%	70%	80%	90%
30 °C	9	5	4	3	1	1	1
25 °C	12	7	5	4	2	1	1
20 °C	17	9	7	6	2	2	1

Baking Conditions

It is not necessary to bake all XLamp LEDs. Only the LEDs that meet all of the following criteria must be baked:

1. LEDs that have been removed from the original MBP.
2. LEDs that have been exposed to a humid environment longer than listed in the Moisture Sensitivity section above.
3. LEDs that have not been soldered.

© 2006-2024 Cree LED. The information in this document is subject to change without notice. Cree®, the Cree logo, the Cree LED logo and XLamp® are registered trademarks of Cree LED. UL® and the UL logo are registered trademarks of UL LLC.

NOTES - CONTINUED

LEDs should be baked at 70 °C for 24 hours. LEDs may be baked on the original reels. Remove LEDs from the MBP before baking. Do not bake parts at temperatures higher than 70 °C. This baking operation resets the exposure time as defined in the Moisture Sensitivity section above.

Storage Conditions

XLamp LEDs that have been removed from the original MBP but not soldered yet should be stored in a room or cabinet that will maintain an atmosphere of 25 ± 5 °C and no greater than 10% RH (relative humidity). For LEDs stored in these conditions, storage time does not add to exposure time as defined in the Moisture Sensitivity section above.

RoHS Compliance

The levels of RoHS restricted materials in this product are below the maximum concentration values (also referred to as the threshold limits) permitted for such substances, or are used in an exempted application, in accordance with EU Directive 2011/65/EC (RoHS2), as implemented January 2, 2013. RoHS Declarations for this product can be obtained from your Cree LED representative or from the Product Ecology section of the Cree LED website.

REACH Compliance

REACH substances of very high concern (SVHCs) information is available for this product. Since the European Chemical Agency (ECHA) has published notice of their intent to frequently revise the SVHC listing for the foreseeable future, please contact a Cree LED representative to insure you get the most up-to-date REACH SVHC Declaration. REACH banned substance information (REACH Article 67) is also available upon request.

UL® Recognized Component

This product meets the requirements to be considered a UL Recognized Component with Level 4 enclosure consideration. The LED package or a portion thereof has been investigated as a fire and electrical enclosure per ANSI/UL 8750.

Vision Advisory

WARNING: Do not look at an exposed lamp in operation. Eye injury can result. For more information about LEDs and eye safety, please refer to the LED Eye Safety application note.

© 2006-2024 Cree LED. The information in this document is subject to change without notice. Cree®, the Cree logo, the Cree LED logo and XLamp® are registered trademarks of Cree LED. UL® and the UL logo are registered trademarks of UL LLC.

MECHANICAL DIMENSIONS (T_A = 25 °C)

All measurements are ±.1 mm unless otherwise indicated.

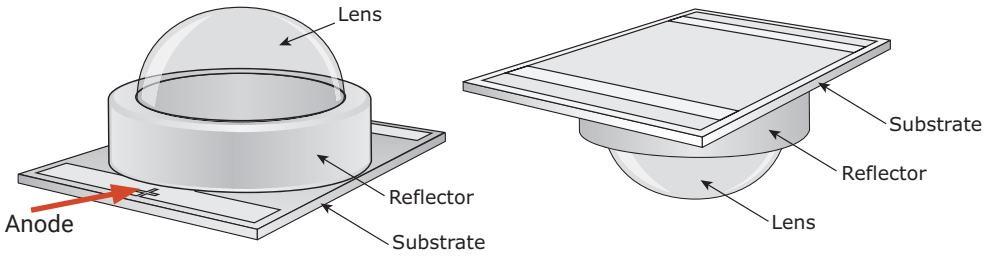

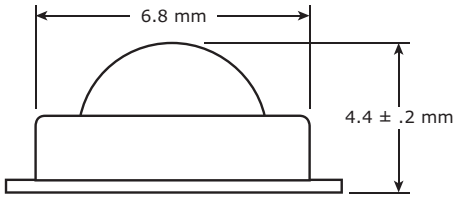

Side View

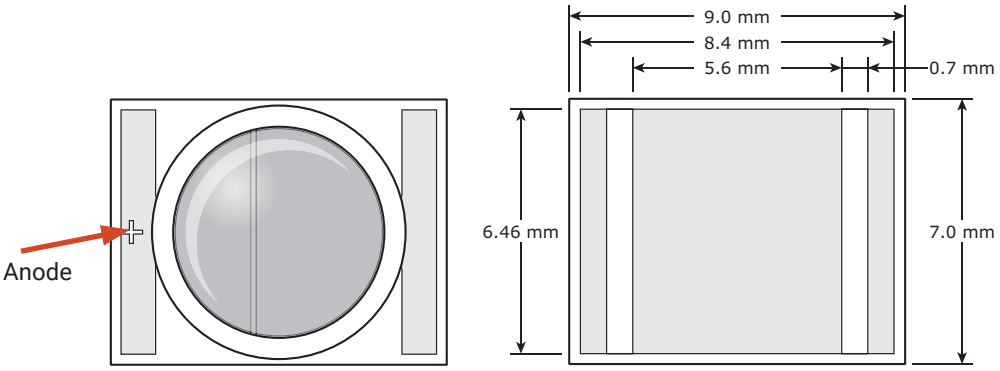

Top View

Bottom View

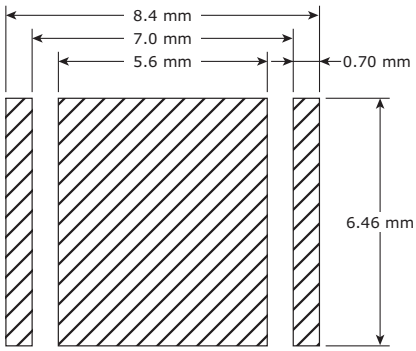

Recommended solder pad for XLamp XR family LEDs

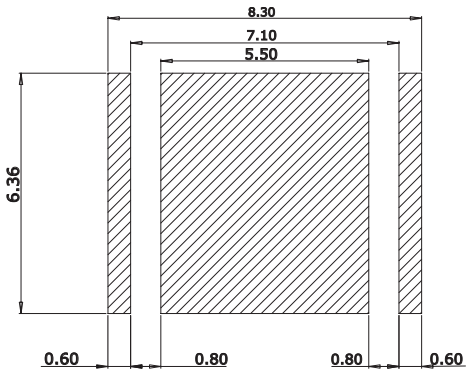

Recommended stencil pattern for XLamp XR family LEDs (hatched area is opening)

© 2006-2024 Cree LED. The information in this document is subject to change without notice. Cree®, the Cree logo, the Cree LED logo and XLamp® are registered trademarks of Cree LED. UL® and the UL logo are registered trademarks of UL LLC.

TAPE AND REEL

All Cree LED carrier tapes conform to EIA-481D, Automated Component Handling Systems Standard.

All dimensions in mm.

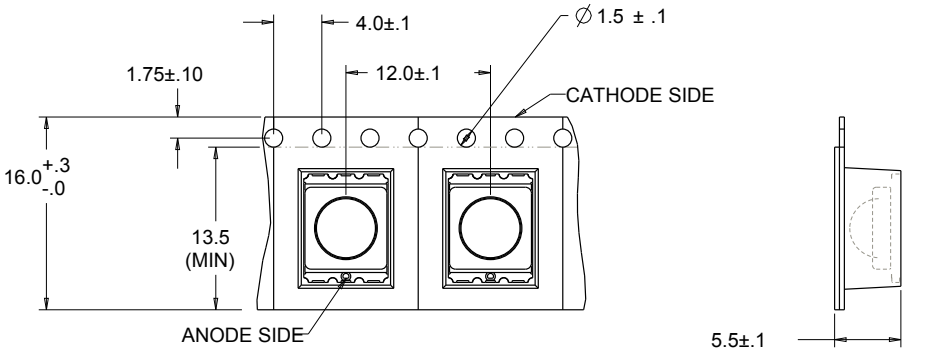

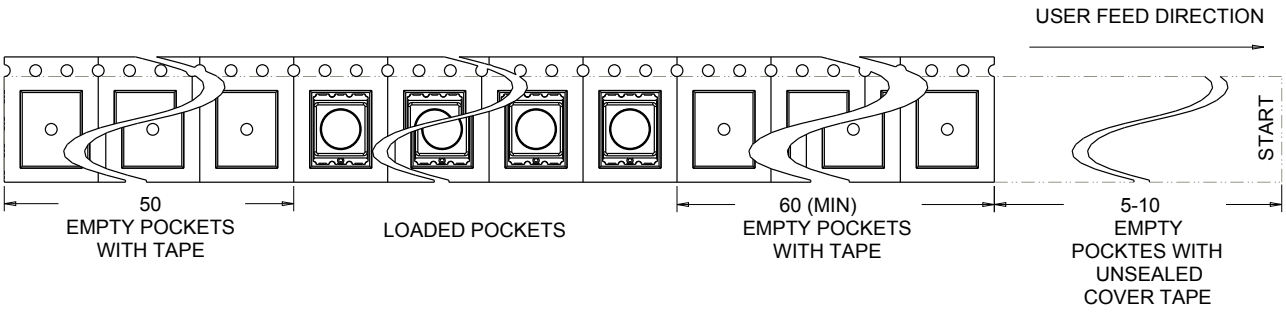

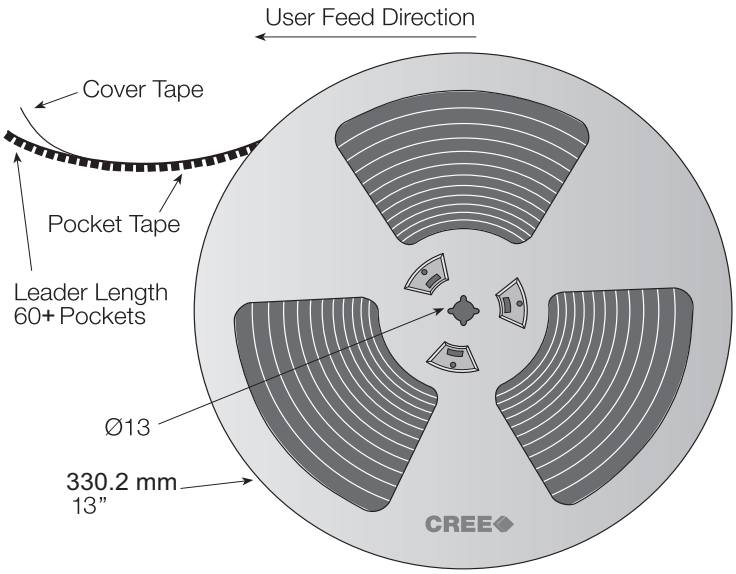

© 2006-2024 Cree LED. The information in this document is subject to change without notice. Cree®, the Cree logo, the Cree LED logo and XLamp® are registered trademarks of Cree LED. UL® and the UL logo are registered trademarks of UL LLC.

PACKAGING

Unpackaged Reel

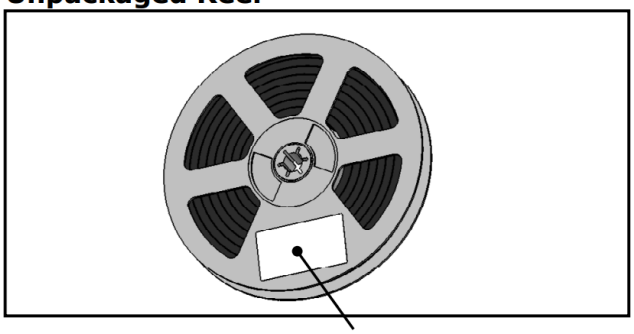

Packaged Reel

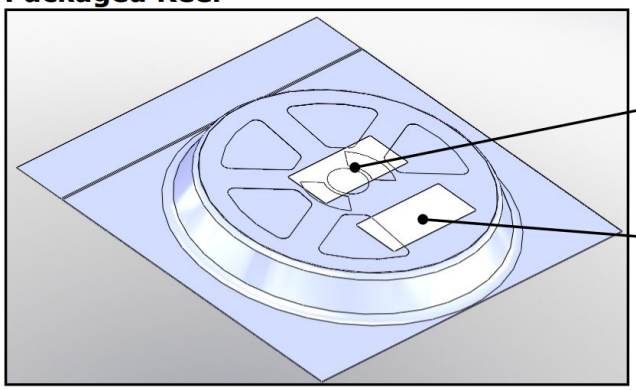

Boxed Reel

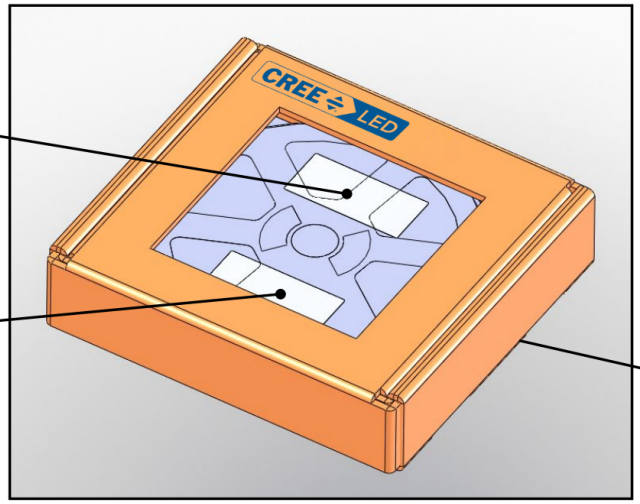

© 2006-2024 Cree LED. The information in this document is subject to change without notice. Cree®, the Cree logo, the Cree LED logo and XLamp® are registered trademarks of Cree LED. UL® and the UL logo are registered trademarks of UL LLC.

APPENDIX - ORDER CODES NOT FOR NEW DESIGNS

The following order codes are active and valid order codes, but higher performance options are also available. Please see page 3 for order codes of XLamp XR-E LEDs that could serve as alternatives for the order codes set forth below.

XR-E Cool White, T_J = 25 °C

Minimum Luminous Flux (lm) @ 350 mA		Chromaticity Regions	Kit Number	Order Code
Group	Flux (lm)			
Cool White (5000 K – 10,000 K)				
P4	80.6	WA, WB, WC, WD, WE, WF, WG, WH, WJ, WK, WM, WN, WP	00901	XREWHT-L1-0000-00901
		WC, WD, WF, WG	00902	XREWHT-L1-0000-00902
		WC, WD, WF, WG, WH, WJ, WN, WP	00903	XREWHT-L1-0000-00903
Q2	87.4	WA, WB, WC, WD, WE, WF, WG, WH, WJ, WK, WM, WN, WP	00A01	XREWHT-L1-0000-00A01
		WC, WD, WF, WG	00A02	XREWHT-L1-0000-00A02
		WC, WD, WF, WG, WH, WJ, WN, WP	00A03	XREWHT-L1-0000-00A03
Q3	93.9	WA, WB, WC, WD, WE, WF, WG, WH, WJ, WK, WM, WN, WP	00B01	XREWHT-L1-0000-00B01
		WC, WD, WF, WG	00B02	XREWHT-L1-0000-00B02
		WC, WD, WF, WG, WH, WJ, WN, WP	00B03	XREWHT-L1-0000-00B03
Q4	100	WA, WB, WC, WD, WE, WF, WG, WH, WJ, WK, WM, WN, WP	00C01	XREWHT-L1-0000-00C01
		WC, WD, WF, WG	00C02	XREWHT-L1-0000-00C02
		WC, WD, WF, WG, WH, WJ, WN, WP	00C03	XREWHT-L1-0000-00C03
Q5	107	WA, WB, WC, WD, WE, WF, WG, WH, WJ, WK, WM, WN, WP	00D01	XREWHT-L1-0000-00D01
		WC, WD, WF, WG	00D02	XREWHT-L1-0000-00D02
		WC, WD, WF, WG, WH, WJ, WN, WP	00D03	XREWHT-L1-0000-00D03
R2	114	WA, WB, WC, WD, WE, WF, WG, WH, WJ, WK, WM, WN, WP	00E01	XREWHT-L1-0000-00E01
		WC, WD, WF, WG	00E02	XREWHT-L1-0000-00E02
		WC, WD, WF, WG, WH, WJ, WN, WP	00E03	XREWHT-L1-0000-00E03

Notes:

- Cree LED maintains a tolerance of ±7% on flux and power measurements, ±0.005 on chromaticity (CCx, CCy) measurements and ±2 on CRI measurements. See the Measurements section (page 14).

© 2006-2024 Cree LED. The information in this document is subject to change without notice. Cree®, the Cree logo, the Cree LED logo and XLamp® are registered trademarks of Cree LED. UL® and the UL logo are registered trademarks of UL LLC.

APPENDIX - ORDER CODES NOT FOR NEW DESIGNS - CONTINUED

The following order codes are active and valid order codes, but higher performance options are also available. Please see page 4 for order codes of XLamp XR-E LEDs that could serve as alternatives for the order codes set forth below.

XR-E Neutral White, T_J = 25 °C

Minimum Luminous Flux (lm) @ 350 mA		Chromaticity Regions	CCT	Kit Number	Order Code
Group	Flux (lm)				
Neutral White (3700 K - 5000 K)					
N4	62.0	5C, 5D, 6A, 6B	3700 K	006F6	XREWHT-L1-0000-006F6
P2	67.2	4C, 4D, 5A, 5B	4300 K	007F5	XREWHT-L1-0000-007F5
		5A, 5B, 5C, 5D	4000 K	007E5	XREWHT-L1-0000-007E5
		5C, 5D, 6A, 6B	3700 K	007F6	XREWHT-L1-0000-007F6
P3	73.9	3A, 3B, 3C, 3D	5000 K	008E3	XREWHT-L1-0000-008E3
		3C, 3D, 4A, 4B	4750 K	008F4	XREWHT-L1-0000-008F4
		4A, 4B, 4C, 4D	4500 K	008E4	XREWHT-L1-0000-008E4
		4C, 4D, 5A, 5B	4300 K	008F5	XREWHT-L1-0000-008F5
		5A, 5B, 5C, 5D	4000 K	008E5	XREWHT-L1-0000-008E5
		5C, 5D, 6A, 6B	3700 K	008F6	XREWHT-L1-0000-008F6
P4	80.6	3A, 3B, 3C, 3D	5000 K	009E3	XREWHT-L1-0000-009E3
		3C, 3D, 4A, 4B	4750 K	009F4	XREWHT-L1-0000-009F4
		4A, 4B, 4C, 4D	4500 K	009E4	XREWHT-L1-0000-009E4
		4C, 4D, 5A, 5B	4300 K	009F5	XREWHT-L1-0000-009F5
		5A, 5B, 5C, 5D	4000 K	009E5	XREWHT-L1-0000-009E5
Q2	87.4	3A, 3B, 3C, 3D	5000 K	00AE3	XREWHT-L1-0000-00AE3
		3C, 3D, 4A, 4B	4750 K	00AF4	XREWHT-L1-0000-00AF4
		4A, 4B, 4C, 4D	4500 K	00AE4	XREWHT-L1-0000-00AE4
		4C, 4D, 5A, 5B	4300 K	00AF5	XREWHT-L1-0000-00AF5
		5A, 5B, 5C, 5D	4000 K	00AE5	XREWHT-L1-0000-00AE5
Q3	93.9	3A, 3B, 3C, 3D	5000 K	00BE3	XREWHT-L1-0000-00BE3
		3C, 3D, 4A, 4B	4750 K	00BF4	XREWHT-L1-0000-00BF4
		4A, 4B, 4C, 4D	4500 K	00BE4	XREWHT-L1-0000-00BE4
Q4	100	3A, 3B, 3C, 3D	5000 K	00CE3	XREWHT-L1-0000-00CE3
		3C, 3D, 4A, 4B	4750 K	00CF4	XREWHT-L1-0000-00CF4
		4A, 4B, 4C, 4D	4500 K	00CE4	XREWHT-L1-0000-00CE4

Notes:

- Cree LED maintains a tolerance of ±7% on flux and power measurements, ±0.005 on chromaticity (CCx, CCy) measurements and ±2 on CRI measurements. See the Measurements section (page 14).

© 2006-2024 Cree LED. The information in this document is subject to change without notice. Cree®, the Cree logo, the Cree LED logo and XLamp® are registered trademarks of Cree LED. UL® and the UL logo are registered trademarks of UL LLC.

APPENDIX - ORDER CODES NOT FOR NEW DESIGNS - CONTINUED

The following order codes are active and valid order codes, but higher performance options are also available. Please see page 5 for order codes of XLamp XR-E LEDs that could serve as alternatives for the order codes set forth below.

XR-E Warm White, T_J = 25 °C

Minimum Luminous Flux (lm) @ 350 mA		Chromaticity Regions	CCT	Kit Number	Order Code
Group	Flux (lm)				
Warm White (2600 K - 3700 K)					
N3	56.8	6C, 6D, 7A, 7B	3200 K	005F7	XREWHT-L1-0000-005F7
		7A, 7B, 7C, 7D	3000 K	005E7	XREWHT-L1-0000-005E7
		7C, 7D, 8A, 8B	2900 K	005F8	XREWHT-L1-0000-005F8
		8A, 8B, 8C, 8D	2700 K	005E8	XREWHT-L1-0000-005E8
N4	62.0	6A, 6B, 6C, 6D	3500 K	006E6	XREWHT-L1-0000-006E6
		6C, 6D, 7A, 7B	3200 K	006F7	XREWHT-L1-0000-006F7
		7A, 7B, 7C, 7D	3000 K	006E7	XREWHT-L1-0000-006E7
		7C, 7D, 8A, 8B	2900 K	006F8	XREWHT-L1-0000-006F8
		8A, 8B, 8C, 8D	2700 K	006E8	XREWHT-L1-0000-006E8
P2	67.2	6A, 6B, 6C, 6D	3500 K	007E6	XREWHT-L1-0000-007E6
		6C, 6D, 7A, 7B	3200 K	007F7	XREWHT-L1-0000-007F7
		7A, 7B, 7C, 7D	3000 K	007E7	XREWHT-L1-0000-007E7
P3	73.9	6A, 6B, 6C, 6D	3500 K	008E6	XREWHT-L1-0000-008E6

Notes:

- Cree LED maintains a tolerance of ±7% on flux and power measurements, ±0.005 on chromaticity (CCx, CCy) measurements and ±2 on CRI measurements. See the Measurements section (page 14).

© 2006-2024 Cree LED. The information in this document is subject to change without notice. Cree®, the Cree logo, the Cree LED logo and XLamp® are registered trademarks of Cree LED. UL® and the UL logo are registered trademarks of UL LLC.