DCmind Brushless motor
Data sheet 80 180 072

Series
80 180 TNI21

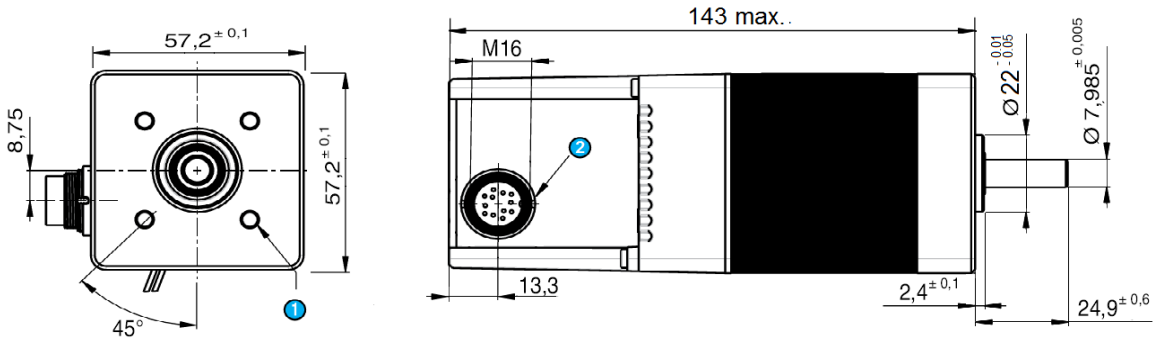

1 4 x M5 trheaded holes on 40mm diameter, 4,5 mm thread depth

2 M16 male connector - 12 contacts

General characteristics

Power supply		
Direct current voltage supply		✓
Nominal voltage range	Vdc	12 -> 32
Max. current	A	14

Motor characteristics (1)		12 Vdc	24 Vdc	32 Vdc	
At no load					
Max. output speed	rpm	2 100	4 000	3 950	
Current at the max output speed	A	0,35	0,39	0,34	
Standby current	A	0,08	0,09	0,09	+-10%
At nominal					
Speed	rpm	1 250	3 350	3 900	+-10%
Torque (2)	mNm	340	285	250	
Output power	W	45	100	102	+-10%
Current	A	6,7	5,4	4,0	
Efficiency	%	55	78	79	
At max. output power					
Speed	rpm	1 040	2 160	3 100	
Torque	mNm	400	600	650	
Output power	W	44	136	211	+-10%
Current	A	7,2	11	12	
Efficiency	%	50	51	55	
At peak torque					
Speed	rpm	220	1 820	2 850	
Torque	mNm	700	700	700	
Output power	W	16	133	209	
Current	A	13	13	13	+-10%
Others					
Life (3)	h	20 000			
Rotor inertia	gcm²	115			
Thermal Resistance	°/W	3			
Thermal time constant	mn	30			
Rotor pole number		4			
Cogging torque	mNm	14			
Weight	kg	1,34			
Noise level	dBA	40			

Connecting		
M16 male connector - 12 contacts		Lumberg 0315 12
+ 12Vdc -> + 32 Vdc	E + F	
0V	G + M	
0V	H	
Input: ON/OFF	C	
Input: Direction	B	
Input: Speed	J	
Input: Torque limit	D	
Output: Pulse	A	
Output: Torque limit reached	K	
Output: Direction	L	

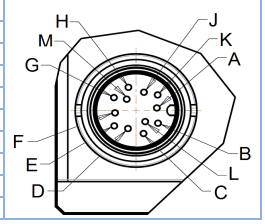

Accessory			
2 meters shielded cable with M16 female connector - 12 pins			
Part number	**15 275 008**	Cable with 12 wires AWG24	
Note: G and M wires have to be connected together. E and F wires have to be connected together			
A = white	B = brown	C = green	D = yellow
E = grey	F = pink	G = blue	H = red
J = black	K = purple	L = grey/pink	M = red/blue

Drive		
Type	**TNI21**	
Built-in drive	✓	
Internal encoder	12 pulses per turn	
Control		
Speed	PWM	
Torque	PWM	
4 quadrants - low braking	✓	
4 quadrants with regenerative energy		
Type" Trapezoidal"	✓	
Security		
Short-circuit of outputs	✓	
Input inverted	✓	
Low voltage	Vdc	< 10
Short high voltage	Vdc	> 36
Stop at max internal drive temperature (2)	°C	110
Drive temperature allowing to restart	°C	90

Generic parameters			
Output shaft with ball bearings		✓	
Max. Radial force (12mm from front face)		N	40
Max. axial force(4)		N	20
Temperature range	CEI60068-2-1/2	°C	-30 -> +70
Storage temperature		°C	-40 -> +80
Dielectric 1min 2mA 50Hz	CEI60335	Vdc	
Motor insulation	CEI60085	class	E
Salt spray	CEI60068-2-58	severity	48h
Degree of protection (output shaft not included)	CEI60529	IP	65M
EMC			
Electrostatic Discharge	CEI61000-4-2	level	3
Electrical fast transsient / burst test	CEI61000-4-4	level	3
Surge test	CEI61000-4-5	level	1
Radiated emission	EN55022	class	B
Approvals			
ROHS	2002/95/CE	✓	
EC		✓	

Notes
Values without tolerences are average production values.
Added informations are in "TNI21 manual and security" on www.crouzet.com
Motor not protected in case of reversed power voltage
(1) Cold motor, 20 ° C ambient temperature, full speed
(2) Max torque for continuous operation at 20 ° C, decrease this value for higher ambient temperature
(3) Continuously rated torque, zero radial and axial loads
(4) Pinion or pulley fitting are done at the Crouzet factory, before final assembly.

Specifications subject to change without notice. Updated july 8, 2013.

Crouzet Automatismes
2 rue du Docteur Abel BP59
26902 Valence CEDEX 9 France

www.crouzet.com

Series 80 180 TNI21

Drive electrical datas

Max. product characteristics				
Parameters				
Max. voltage supply "Vcc"	Vdc	39		
Max. current "Icc max"	A	15		
Max. voltage on inputs "Vin max"	Vdc	39		
Max. voltage on outputs "Vout max"	Vdc	39		
Max. output current "Iout max"	mA	50		
Running datas				
Parameters		Min	Typical	Max
Voltage suplly "Vcc"	Vdc	10	12/24/32	36
Current "Icc"	A	-	6	15
Standby power "Wo"	W	-	2	-
Speed setting	rpm	120	-	4 000
Torque setting	mNm	30	-	700
Holding torque setting	mNm	30	-	230

Input datas				
Parameters		Min	Typical	Max
Impedance - Input 1, 2	kΩ	-	57	-
Impedance - Input 3, 4	kΩ	-	69	-
Low level - Input 1, 2	Vdc	0	-	2
HIgh level - Input 1, 2	Vdc	4	-	39
Low level - Input 3, 4	Vdc	0	-	2
High level - Input 3, 4	Vdc	7,5	-	39
PWM frequency	Hz	100	-	2000
Output datas				
Parameters		Min	Typical	Max
Low level Outputs	Vdc	0	-	0,2
with "pull down resistor" = 4,7KΩ and Vcc = 24 V				
High level Outputs	Vdc	Vcc - 0,5	-	Vcc
with "pull down resistor" = 4,7KΩ and Vcc = 24 V				
= voltage supply added from eventual rejective voltage				

Speed-torque and current-torque curves

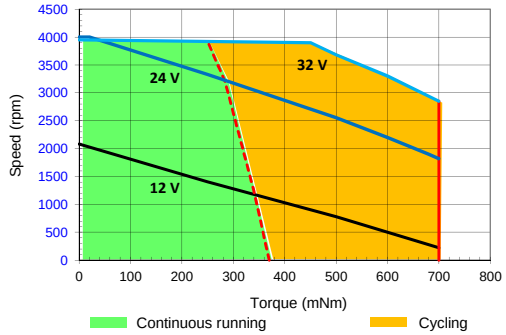

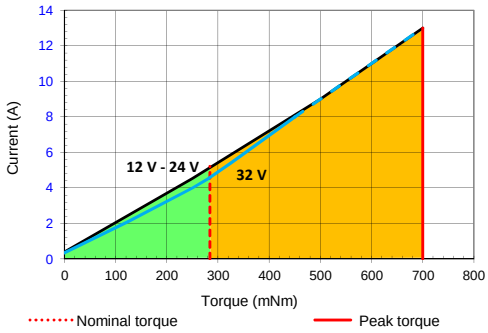

Wiring

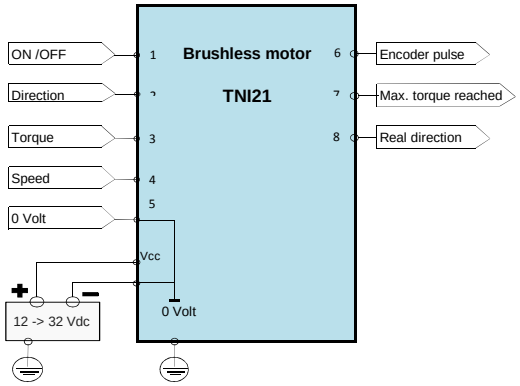

Output equivalent circuit

Outputs

PNP open collector output with internal current limitation (50mA)

Add a pull down resistor

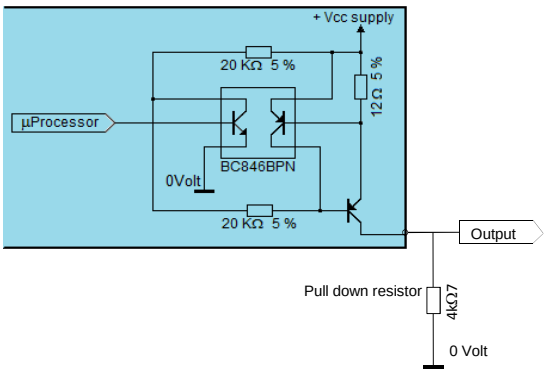

Inputs: ON/OFF and Direction

Inputs: ON/OFF and Direction

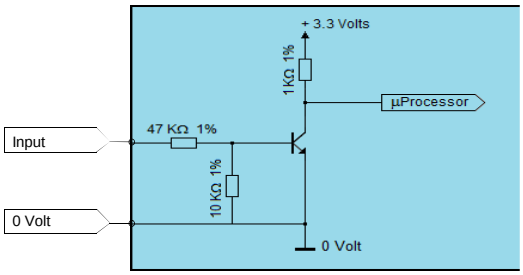

Inputs: Torque and Speed

Inputs: Torque and Speed

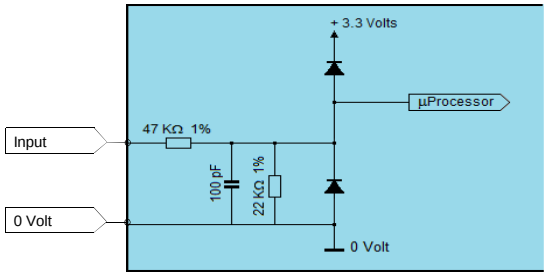

Series 80 180 TNI21

Crouzet Automatismes
2 rue du Docteur Abel BP59
26902 Valence CEDEX 9 France
www.crouzet.com