CROUZET MOTORS

## 5 Nm 3.5 Watts 3.5 Watts Part number made to order



- Mechanical strength : 5 Nm
- Constant speed, dependent on supply frequency
- Speeds from 0.24 rpm to 24 rpm
- Direction of rotation controlled by long-life mechanical anti-return
- Permanent magnet rotor
- UL, CSA approved, comply with IEC standards

### Part numbers

| | Type | Type | Direction of rotation | Output speed | Ratios | Voltage / Frequency |
|---|---|---|---|---|---|---|
| 80 337 514 | 3.5 Watts | 80 337 5 | Anti-clockwise | 4.80 rpm | 125 | 230 V 50 Hz |

### Specifications

| | |
|---|---|
| Motor | 82 330 5 |
| Gearbox | 81 037 0 |
| Maximum permitted continuous-rated gearbox output torque over 1 million revolutions (Nm) | 5 |
| Radial load static (daN) | 2 |
| Axial load static (daN) | 3 |
| Absorbed power (W) | 3,5 |
| Motor output (W) | 0,42 |
| Maximum temperature rise (°C) | 55 |
| Ambient temperature (°C) | -5 →+60 |
| Weight (g) | 480 |
| Wires length mm (approximately) | 250 |
| Protection rating | IP40 |

### Dimensions (mm)

**80 337 5**

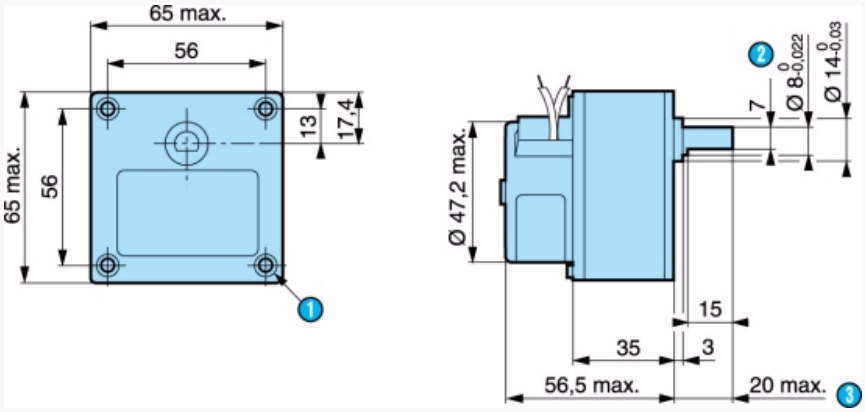


| N° | Legend |
|---|---|
| 1 | 4 holes M4 depth 12 mm |
| 2 | 7 across flat |
| 3 | pushed-in shaft |

### Dimensions (mm)

**Shaft 79 206 478**

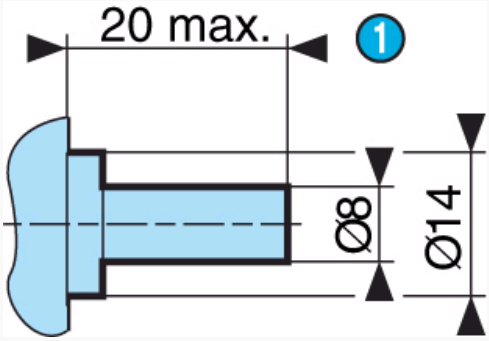


| Nº | Legend |
|---|---|
| 1 | (pushed-in shaft ) |

## Product adaptations

- Different voltages available
- Special cable lengths
- Special connectors
- Special output shafts
- Special gearbox ratios
- Special gear wheel material
- Special output bearings
- Special mounting plate