CROUZET MOTORS

5 Nm 3.5 Watts 3.5 Watts Part number made to order



- Mechanical strength : 5 Nm
- Constant speed, dependent on supply frequency
- Speeds from 0.24 rpm to 24 rpm
- Direction of rotation controlled by long-life mechanical anti-return
- Permanent magnet rotor
- UL, CSA approved, comply with IEC standards

Part numbers

	Type	Type	Direction of rotation	Output speed	Ratios	Voltage / Frequency
80 337 532	3.5 Watts	80 337 5	Anti-clockwise	0.24	2500	240 V 50 Hz

Specifications

Motor	82 330 5
Gearbox	81 037 0
Maximum permitted continuous-rated gearbox output torque over 1 million revolutions (Nm)	5
Radial load static (daN)	2
Axial load static (daN)	3
Absorbed power (W)	3,5
Motor output (W)	0,42
Maximum temperature rise (°C)	55
Ambient temperature (°C)	-5 →+60
Weight (g)	480
Wires length mm (approximately)	250
Protection rating	IP40

Dimensions (mm)

80 337 5

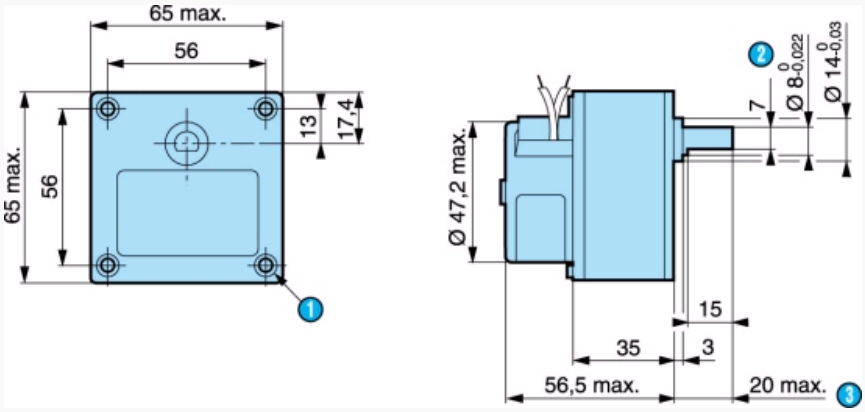

N°	Legend
1	4 holes M4 depth 12 mm
2	7 across flat
3	(pushed-in shaft)

Dimensions (mm)

Shaft 79 206 478

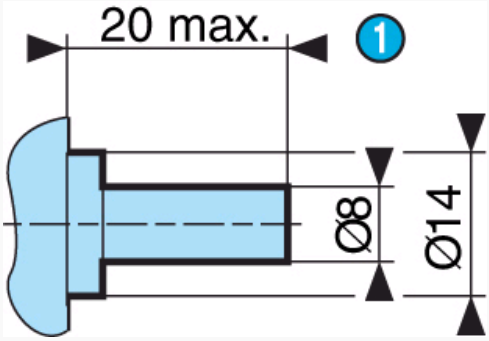

Nº	Legend
1	(pushed-in shaft)

Product adaptations

- Different voltages available
- Special cable lengths
- Special connectors
- Special output shafts
- Special gearbox ratios
- Special gear wheel material
- Special output bearings
- Special mounting plate