CROUZET MOTORS

5 Nm 2.7 and 3.5 Watts 3.5 Watts Part number made to order



- Mechanical strength : 5 Nm
- Constant speed, dependent on supply frequency
- Direction of rotation controlled by dephasing capacitor
- Permanent magnet rotor
- UL, CSA approved ; comply with IEC standards

Part numbers

	Type	Type	Voltage / Frequency	Base speed of motor (rpm)	Output speed (rpm)	Ratios
80 527 008	3.5 Watts	80 527 0	230-240 V / 50 Hz	250	0,33	750

Specifications

Motor	82 520 0
Gearbox	81 037 0
Maximum permitted continuous rated gearbox output torque for 1 million revolutions of gearbox output shaft (Nm)	5
Axial load static (daN)	2
Radial load static (daN)	3
Absorbed power (W)	3,5
Motors output (W)	0,98
Maximum temperature rise (°C)	50
Ambient temperature (°C)	-10 →+70
Weight (g)	530
Wires length mm (approximately)	250
Protection rating	IP40

Accessories

Voltages/Frequencies	µF	V AC	Code
Capacitors for motor 82 520 0			
230-240 V - 50 Hz	0,1 ± 10 %	500	26 231 941
115 V - 60 Hz	0,33 ± 10 %	400	26 231 801
24 V - 50 Hz	8,2 ± 10 %	63	26 231 711

Dimensions (mm)

80 517 0 - 80 527 0

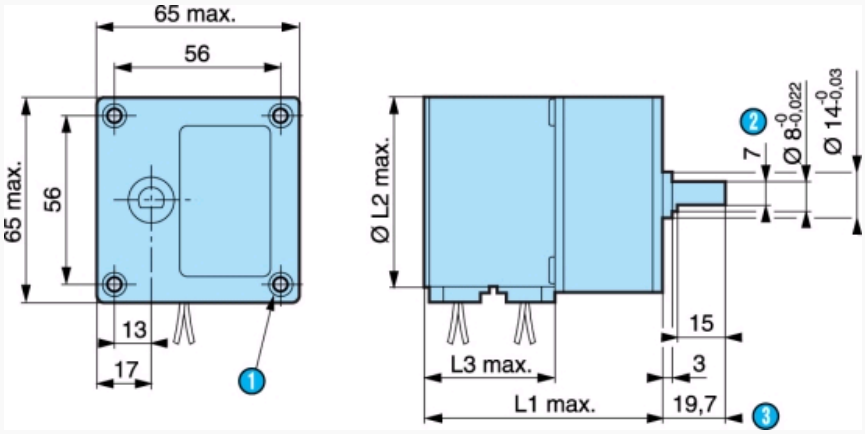

Nº	Legend
1	4 holes M4 depth 12
2	7 across flat

Unless otherwise specified, the characteristics given are applicable to all or part of the product range selected

3	(pushed-in shaft)
	80 517 0 L1 = 55.3 mm Ø L2 = 35.8 mm L3 = 21.7 mm
	80 527 0 L1 = 59.2 mm Ø L2 = 51.3 mm L3 = 25.6 mm

Dimensions (mm)

Shaft 79 206 478

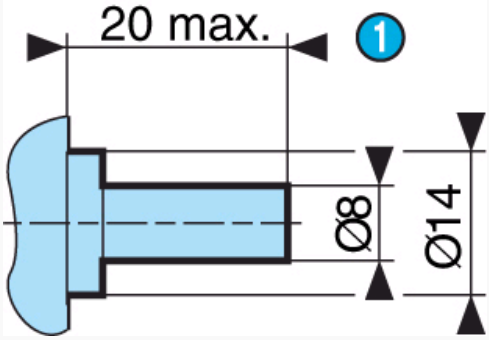

Nº	Legend
1	(pushed-in shaft)

Curves

Torque/speed curves 80 527 0

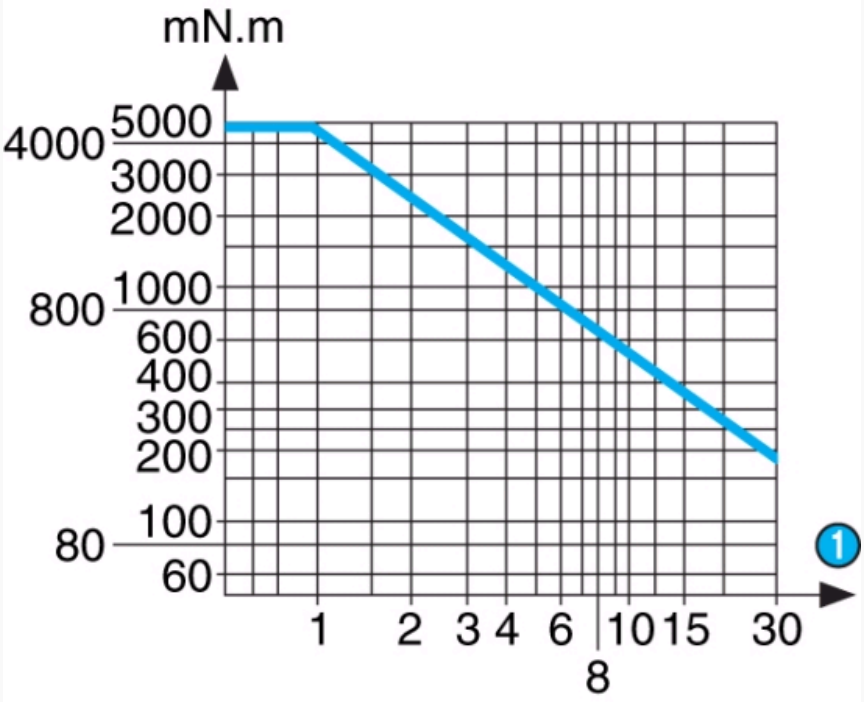

Nº	Legend
1	RPM

Connections

In parallel
Motors 82 510 0 - 82 520 0

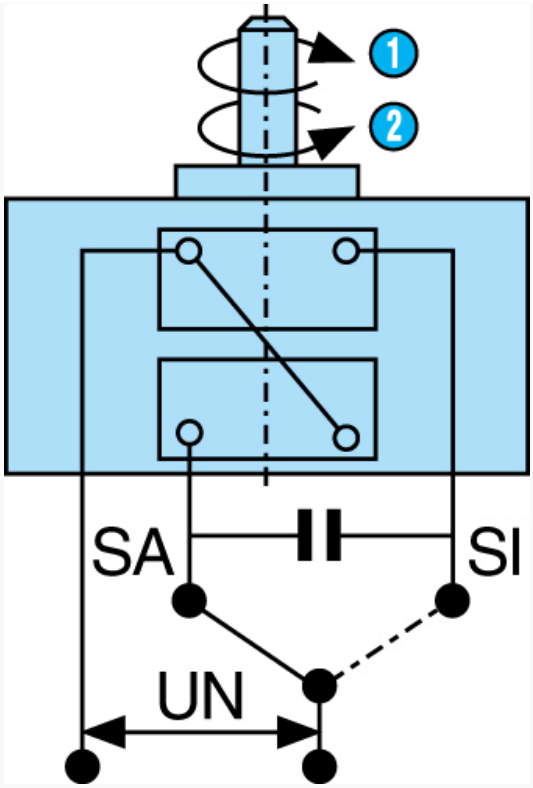

Nº	Legend
1	SA : clockwise
2	SI : anti-clockwise

Product adaptations

- Different voltages available
- Special cable lengths
- Special connectors
- Special output shafts
- Special gearbox ratios
- Special gear wheel material
- Special output bearings